CITY OF BEAUMONT, TEXAS

BEAUMONT
TEXAS

COLLIER'S FERRY PUMP STATION

ROBIN MOUTON
MAYOR

KYLE HAYES
CITY MANAGER

BART BARTKOWIAK
PUBLIC WORKS DIRECTOR

ALBERT "A.J." TURNER
COUNCILMEMBER AT LARGE

RANDY FELDSCHAU
COUNCILMEMBER AT LARGE

ISSUED FOR BID

JANUARY 2022

TAYLOR NEILD
COUNCILMEMBER WARD 1

MIKE GETZ
COUNCILMEMBER WARD 2

AUDWIN M. SAMUEL
COUNCILMEMBER WARD 3

CHARLES DURIO
COUNCILMEMBER WARD 4

FREESE AND NICHOLS
11200 Broadway Street, Suite 2320
Pearland, Texas 77584
Phone - (832) 456-4700
Web - www.freese.com

CITY BID NO. WU0222-14
BMT20326

APPROVED BY:

JOHN PIPPINS III, EIT
WATER UTILITIES DESIGN MANAGER

AMALIA VILLARREAL, P.E.
CITY ENGINEER

BART BARTKOWIAK
DIRECTOR OF PUBLIC WORKS
AND TECHNOLOGY SERVICES

STATE OF TEXAS
SOMNATH CHILUKURI
118309
LICENSED
PROFESSIONAL ENGINEER
01-19-2022

FREESE AND NICHOLS, INC.
TEXAS REGISTERED ENGINEERING
FIRM F-2144

ISSUED FOR BID

Freese and Nichols, Inc.
Texas Registered Engineering Firm F-2144

FREESE AND NICHOLS
10497 Town and Country Way,
Suite 600
Houston, Texas 77024
Phone - (713) 600-6800
Web - www.freese.com

CITY OF BEAUMONT
COLLIER'S FERRY PUMP STATION
GENERAL
COVER

NO.	ISSUE	BY	DATE

F&N JOB NO. BMT20326
DATE 01/07/2022
DESIGNED LVR
DRAWN WFA
REVISED -
CHECKED ACH
FILE NAME GN-ALL-COVER.DWG

VERIFY SCALE 0 1 Bar is one inch on original drawing. If not one inch on this sheet, adjust scale.

SHEET G-1
SEQ. 1

SEQUENCE NO.	SHEET NO.	SHEET NAME
		GENERAL
1	G-1	COVER
2	G-2	INDEX OF DRAWINGS
3	G-3	GENERAL CONSTRUCTION NOTES I
4	G-4	GENERAL CONSTRUCTION NOTES II
5	G-5	OVERALL KEY MAP
6	G-6	DRAWING STANDARDS AND NOMENCLATURE
7	G-7	PIPE LEGEND AND ABBREVIATIONS
8	G-8	EQUIPMENT AND VALVE LEGEND AND ABBREVIATIONS
9	G-9	HYDRAULIC PROFILE
		PROCESS & INSTRUMENTATION
10	PI-1	LEGEND I
11	PI-2	LEGEND II
12	PI-3	PROCESS DIAGRAM
13	PI-4	LOOP DIAGRAMS I
14	PI-5	LOOP DIAGRAMS II
		CIVIL
15	C-1	HORIZONTAL AND VERTICAL CONTROL
16	C-2	BOUNDARY AND TOPOGRAPHIC SURVEY - SHEET 1 OF 2
17	C-3	BOUNDARY AND TOPOGRAPHIC SURVEY - SHEET 2 OF 2
18	C-4	OVERALL SITE PLAN
19	C-5	COLLIER'S FERRY PUMP STATION SITE DEMO PLAN
20	C-6	COLLIER'S FERRY PUMP STATION SITE AND EXISTING GRADING PLAN
21	C-7	COLLIER'S FERRY PUMP STATION SITE AND GRADING PLAN
22	C-8	COLLIER'S FERRY PUMP STATION SITE PLAN
23	C-9	COLLIER'S FERRY PUMP STATION YARD PIPING PLAN
24	C-10	COLLIER'S FERRY PUMP STATION DISCHARGE PIPE PLAN AND PROFILE
25	C-11	TCP GENERAL NOTES
26	C-12	PINE STREET AND ACCESS ROAD CONSTRUCTION SEQUENCE
27	C-13	BARRICADE AND CONSTRUCTION GENERAL NOTES AND REQUIREMENTS BC(1)-21
28	C-14	BARRICADE AND CONSTRUCTION PROJECT LIMIT BC(2)-21
29	C-15	BARRICADE AND CONSTRUCTION WORK ZONE SPEED LIMIT BC(3)-21
30	C-16	BARRICADE AND CONSTRUCTION TEMPORARY SIGN NOTES BC(4)-21
31	C-17	BARRICADE AND CONSTRUCTION TYPICAL SIGN SUPPORT BC(5)-21
32	C-18	BARRICADE AND CONSTRUCTION PORTABLE CHANGEABLE MESSAGE SIGN (PCMS) BC(6)-21
33	C-19	BARRICADE AND CONSTRUCTION ARROW PANEL, REFLECTORS, WARNING LIGHTS & ATTENUATOR BC(7)-21
34	C-20	BARRICADE AND CONSTUCTION CHANNELIZING DEVICES BC(8)-21
35	C-21	BARRICADE AND CONSTRUCTION CHANNELIZING DEVICES BC(9)-21
36	C-22	BARRICADE AND CONSTRUCTION CHANNELIZING DEVICES BC(10)-21
37	C-23	BARRICADE AND CONSTRUCTION PAVEMENT MARKINGS BC(11)-21
38	C-24	BARRICADE AND CONSTRUCTION PAVEMENT MARKINGS PATTERNS BC(12)-21
39	C-25	WORK ZONE ROAD CLOSURE DETAILS WZ(RCD)-13
40	C-26	ACCESS RD TYPICAL SECTION
41	C-27	PINE ST PLAN & PROFILE STA 0+00 TO STA 5+50
42	C-28	PINE ST PLAN AND PROFILE STA 5+00.00 TO END
43	C-29	ACCESS RD PLAN & PROFILE STA 0+00 TO STA 5+00
44	C-30	ACCESS RD PLAN & PROFILE STA 5+00 TO STA 10+00
45	C-31	DRIVEWAY DETAILS
46	C-32	TAPERED EDGE DETAILS HMAC PAVEMENT TE(HMAC)-11
47	C-33	TYPICAL STANDARD PAVEMENT MARKINGS PM(1)-20
48	C-34	POSITION GUIDANCE USING RAISED MARKERS REFLECTORIZED PROFILE MARKINGS PM(2)-20
49	C-35	DRAINAGE AREA MAP EXISTING
50	C-36	DRAINAGE AREA MAP PROPOSED
51	C-37	DRAINAGE DETAILS
52	C-38	DRAINAGE DETAILS
53	C-39	DRAINAGE DETAILS
54	C-40	PRECAST ROUND MANHOLE (PRM)
55	C-41	PRECAST JUNCTION BOX (PJB)
56	C-42	DESIGN DATA FOR PRECAST BASE AND JUNCTION BOX (PDD)
57	C-43	PRECAST AREA ZONE DRAIN (PAZD)
58	C-44	ACESS RD N RETAINING WALL PLAN AND PROFILE
59	C-45	ACESS RD S RETAINING WALL PLAN AND PROFILE
60	C-46	MECHANICALLY STABILIZED RETAINING WALL
61	C-47	PINE ST AND ACCESS RD SW3P STA 0+00 TO STA 5+00
62	C-48	PINE ST AND ACCESS RD SW3P STA 5+00 TO END
63	C-49	FENCE & VERTICAL TRACKING EC(1)-16
64	C-50	ROCK FILTER DAMS EC(2)-16
65	C-51	CONSTRUCTION EXITS EC(3)-16
66	C-52	EROSION CONTROL LOG EC(9)-16 SHEET 1
67	C-53	EROSION CONTROL LOG EC(9)-16 SHEET 2
68	C-54	EROSION CONTROL LOG EC(9)-16 SHEET 3
69	C-55	PINE STREET CROSS-SECTIONS STA 1+00 TO STA 4+00
70	C-56	PINE STREET CROSS-SECTIONS STA 5+00 TO STA 7+00
71	C-57	ACCESS RD CROSS-SECTIONS STA 1+50 TO STA 3+50
72	C-58	ACCESS RD CROSS-SECTIONS STA 4+00 TO STA 5+50
73	C-59	ACCESS RD CROSS-SECTIONS STA 6+00 TO STA 7+50
74	C-60	ACCESS RD CROSS-SECTIONS STA 8+00 TO STA 8+50
75	C-61	LAWSON RWPS SITE PLAN
76	C-62	STORMWATER POLLUTION PREVENTION PLAN
77	C-63	STORMWATER POLLUTION PREVENTION PLAN DETAILS
78	C-64	INTERMEDIATE SHAFT ACCESS AND SITE PLAN
79	C-65	TUNNEL OVERALL PLAN AND PROFILE
80	C-66	TUNNEL PLAN & PROFILE - SHEET 1 OF 3
81	C-67	TUNNEL PLAN & PROFILE - SHEET 2 OF 3
82	C-68	TUNNEL PLAN & PROFILE - SHEET 3 OF 3
83	C-69	TUNNEL DETAILS - SHEET 1 OF 2
84	C-70	TUNNEL DETAILS - SHEET 2 OF 2
85	C-71	MISCELLANEOUS CIVIL DETAILS - SHEET 1 OF 2
86	C-72	MISCELLANEOUS CIVIL DETAILS - SHEET 2 OF 2
		MECHANICAL
87	M-1	COLLIER'S FERRY PUMP STATION RENDERING
88	M-2	COLLIER'S FERRY PUMP STATION TOP PLAN
89	M-3	COLLIER'S FERRY PUMP STATION BOTTOM PLAN
90	M-4	COLLIER'S FERRY PUMP STATION SECTION VIEW
91	M-5	COLLIER'S FERRY PUMP STATION METER RUN PLAN AND SECTION
92	M-6	MECHANICAL DETAILS - SHEET 1 OF 5
93	M-7	MECHANICAL DETAILS - SHEET 2 OF 5
94	M-8	MECHANICAL DETAILS - SHEET 3 OF 5
95	M-9	MECHANICAL DETAILS - SHEET 4 OF 5
96	M-10	MECHANICAL DETAILS - SHEET 5 OF 5
		STRUCTURAL
97	S-1	GENERAL NOTES I
98	S-2	GENERAL NOTES II
99	S-3	PUMP STATION SECTIONAL PLAN
100	S-4	PUMP STATION TOP PLAN
101	S-5	PUMP STATION BUILDING SECTION
102	S-6	PUMP STATION SECTIONS
103	S-7	PUMP STATION SECTIONS AND DETAILS
104	S-8	ELECTRICAL BUILDING FOUNDATION PLAN AND SECTION
105	S-9	ELECTRICAL BUILDING SECTIONS AND DETAILS
106	S-10	GENERATOR & TRANSFORMER PADS FOUNDATION PLAN AND SECTIONS
107	S-11	METER RUN SLAB FOUNDATION PLAN AND SECTIONS
108	S-12	LAWSON PUMP STATION PIPE PENETRATION IN EXISTING WALL
109	S-13	STANDARD SECTIONS AND DETAILS I
110	S-14	STANDARD SECTIONS AND DETAILS II
		ARCHITECTURAL
111	A-1	ELECTRICAL BUILDING FLOOR PLAN & DOOR SCHEDULE
		HVAC
112	H-1	ELECTRICAL BUILDING HVAC FLOOR PLAN
		ELECTRICAL
113	E-1	LEGEND I
114	E-2	LEGEND II
115	E-3	OVERALL SITE PLAN
116	E-3D	DEMOLITION SITE PLAN
117	E-4	ELECTRICAL BUILDING POWER PLAN
118	E-5	ELECTRICAL BUILDING HVAC POWER, LIGHTING & RECEPTACLES PLAN
119	E-6	ELECTRICAL BUILDING INSTRUMENTATION & CONTROLS PLAN
120	E-7	SITE GROUNDING & LIGHTING PLAN
121	E-7A	SECURITY PLANS
122	E-8	PUMP STATION POWER PLAN
123	E-9	PUMP STATION INSTRUMENTATION & CONTROLS PLAN
124	E-10	ELECTRICAL BUILDING CABLE TRAY AND METER RUN PLAN
125	E-11	480V ONE-LINE DIAGRAM
126	E-12	EQUIPMENT ELEVATIONS
127	E-13	PUMP CONTROL SCHEMATIC
128	E-14	CONTROL SCHEMATICS I
129	E-15	CONTROL SCHEMATICS II & SCHEDULES
130	E-16	INTERCONNECTION DIAGRAM
131	E-17	DUCT BANK DETAILS I
132	E-18	DETAILS I
133	E-19	DETAILS II
134	E-20	DETAILS III

ISSUED FOR BID

Freese and Nichols, Inc.
Texas Registered Engineering Firm F-2144

STATE OF TEXAS
Samantha Chalupsky
118309
LICENSED
PROFESSIONAL ENGINEER
01-19-2022

FREESE AND NICHOLS
10497 Town and Country Way,
Suite 600
Houston, Texas 77024
Phone - (713) 600-6800
Web - www.freese.com

CITY OF BEAUMONT
COLLIER'S FERRY PUMP STATION
GENERAL
INDEX OF DRAWINGS

F&N JOB NO.	BMT20326
DATE	01/07/2022
DESIGNED	L.VR
DRAWN	W.F.A
REVISED	-
CHECKED	A.C.H
FILE NAME	GN-SHT-INDEX.dwg

NO.	ISSUE	BY	DATE

VERIFY SCALE 0 1 Bar is one inch on original drawing, if not one inch on this sheet, adjust scale.

SHEET G-2

SEQ. 2

GENERAL NOTES

1. THE FOLLOWING GENERAL NOTES APPLY TO ALL SHEETS OF CONTRACT DOCUMENTS AS IF THEY WERE WRITTEN IN THEIR ENTIRETY ON EACH SHEET.
2. ADEQUATE DRAINAGE SHALL BE MAINTAINED AT ALL TIMES DURING CONSTRUCTION AND ANY DAMAGE TO DITCHES OR STRUCTURES DISTURBED DURING CONSTRUCTION SHALL BE RESTORED TO EXISTING CONDITION OR BETTER.
3. CONSTRUCTION SHALL COMPLY WITH LATEST EDITION OF OSHA REGULATIONS AND THE STATE OF TEXAS LAWS CONCERNING EXCAVATION. ALL WORKS, SERVICES, AND LABOR SHALL CONFORM TO THE CITY OF BEAUMONT CODE OF ORDINANCES.
4. THE CONTRACTOR SHALL VERIFY THE DIMENSIONS SHOWN ON THE CONSTRUCTION PLANS WITH THOSE MEASURED IN THE FIELD PRIOR TO COMMENCING CONSTRUCTION. DELINEATION ON THE DRAWINGS OF EXISTING FACILITIES WAS TAKEN FROM EXISTING CONSTRUCTION DRAWINGS OR SURVEY DATA AND IS FOR REFERENCE ONLY AND SHALL BE FIELD VERIFIED BY THE CONTRACTOR. ANY DISCREPANCY SHALL BE BROUGHT TO THE ATTENTION OF THE ENGINEER IMMEDIATELY.
5. THE CONTRACTOR SHALL BE RESPONSIBLE FOR ALL PERMITS UNLESS NOTIFIED OTHERWISE.
6. THE CONTRACTOR SHALL BE RESPONSIBLE FOR SAFEGUARDING AND PROTECTING ALL MATERIALS AND EQUIPMENT STORED ON THE JOB SITE. THE CONTRACTOR SHALL BE RESPONSIBLE FOR THE STORAGE OF MATERIALS IN A SAFE AND GOOD WORKMANLIKE MANNER TO PREVENT INJURIES, DURING AND AFTER WORKING HOURS, UNTIL PROJECT COMPLETION.
7. AT THE END OF CONSTRUCTION, THE CONTRACTOR SHALL RESTORE THE EXISTING FACILITIES, I.E. THE PROPERTY, EQUAL TO OR BETTER THAN EXISTING SITE CONDITIONS PRIOR TO CONSTRUCTION. ALL AREAS DISTURBED ALONG THE SITE SHALL BE HYDROMULCHED SEEDED UNLESS OTHERWISE NOTED.
8. MINIMIZE AND CONTROL SPREADING OF DUST AND FLYING PARTICLES, AS REQUIRED BY GOVERNING REGULATIONS. USE TEMPORARY ENCLOSURES AND OTHER SUITABLE METHODS SUCH AS WATERING TO PREVENT THE SPREAD OF DUST, DIRT, AND DEBRIS.
9. ALL WORKS SHALL BE CONDUCTED WITHIN THE RIGHT-OF-WAY AND/ OR EASEMENTS SHOWN UNLESS OTHERWISE APPROVED BY THE OWNER OR ENGINEER.
10. NO EXCAVATION AREA SHALL BE LEFT OPEN UNLESS OTHERWISE NOTED DURING NON-WORKING HOURS. ALL UNATTENDED EXCAVATION OVER 2 FEET IN DEPTH SHALL BE PROTECTED BY BRIGHT ORANGE SAFETY FENCING DURING NORMAL WORKING HOURS AND COVERED SECURELY IF LEFT OPEN AFTER HOURS.
11. THE CONTRACTOR SHALL NOT OBTAIN WATER FROM THE CITY OF BEAUMONT FIRE HYDRANTS OR OTHER SOURCES FROM THE DISTRIBUTION SYSTEM WITHOUT PRIOR PERMISSION. CONTRACTOR MAY OBTAIN WATER FROM THE CITY OF BEAUMONT AT THE LOCATION DESIGNATED BY THE OWNER.
12. CONTRACTOR SHALL MAINTAIN ACCESS TO RESIDENTIAL AND COMMERCIAL PROPERTIES ADJACENT TO THE WORK AREA AT ALL TIMES.
13. THE CONTRACTOR SHALL OBTAIN APPROVAL ON INGRESS/EGRESS ROUTES, HAULING ROUTES, ETC. FROM THE CITY.
14. THE WORK AREA SHALL BE BARRICADED AND ILLUMINATED DURING DARKNESS AND PERIOD OF INACTIVITY, WHEN IN AN AREA OF DIRECT PUBLIC ACCESS, AND AS DIRECTED BY THE CITY.
15. THE LOADING AND UNLOADING OF ALL PIPE, VALVES, FIRE HYDRANTS, MANHOLES, EQUIPMENT, AND OTHER ACCESSORIES SHALL BE IN ACCORDANCE WITH THE MANUFACTURER'S RECOMMENDED PRACTICES AND SHALL AT ALL TIMES BE PERFORMED WITH CARE TO AVOID ANY DAMAGE TO THE MATERIAL. THE CONTRACTOR SHALL LOCATE AND PROVIDE THE NECESSARY STORAGE AREAS FOR THE MATERIALS AND EQUIPMENT.
16. THE CONTRACTOR SHALL BE RESPONSIBLE FOR THE SHIPPING AND STORAGE OF ALL MATERIALS. IT SHALL BE THE CONTRACTOR'S RESPONSIBILITY TO EXAMINE SUCH MATERIAL AT THE POINT OF DELIVERY AND TO REJECT ALL DEFECTIVE MATERIAL. ANY DEFECTIVE MATERIAL INCORPORATED INTO THE WORK SHALL BE REMOVED AND REPLACED AT THE CONTRACTOR'S EXPENSE.
17. EXISTING SURVEY MONUMENTS DISTURBED DURING CONSTRUCTION ARE TO BE REPLACED BY A PROFESSIONAL LAND SURVEYOR LICENSED IN THE STATE OF TEXAS FOR THE ORIGINAL PROPERTY OWNER AT NO SEPARATE PAY.
18. MOWING, MAINTENANCE AND CLEAN-UP IS TO BE PERFORMED BY THE CONTRACTOR FOR THE PROJECT LIMITS AND DURATION, REGARDLESS OF THE CONTRACTOR'S SCOPE OF ACTIVITIES WITH THE PROJECT.
19. CONTRACTOR SHALL VERIFY LOCATIONS OF UNDERGROUND UTILITY LINES AND SHALL CONTACT TEXAS811 48 HOURS IN ADVANCE OF BEGINNING ANY WORK IDENTIFIED IN THESE CONTRACT DRAWINGS.
20. CLEARING PROJECT SITE USING FIRE OR CHEMICALS IS NOT ALLOWED.
21. THE CONTRACTOR SHALL NOT DUMP ANY DIRT OR OTHER MATERIAL ONTO A PROPERTY OUTSIDE OF THE BOUNDARY OF THE PERMITTED PROJECT AND WITHIN THE CITY OF BEAUMONT CITY LIMITS WITHOUT A VALID DEVELOPMENT/GRADING PERMIT ISSUED TO THE OFFSITE PROPERTY OWNER BY THE CITY OF BEAUMONT ENGINEERING DEPARTMENT. IF SUCH DUMPING IS TO OCCUR WITHOUT A VALID PERMIT, THE CONTRACTOR SHALL BE SOLELY RESPONSIBLE FOR ALL REMOVAL OF ANY DISCARDED DIRT OR OTHER MATERIAL TO AN APPROVED LOCATION AT THE CONTRACTOR'S EXPENSE.
22. PIPING DRAWINGS INDICATE INVERT ELEVATIONS FOR GRAVITY FLOW LINES. SLOPE PIPE UNIFORMLY BETWEEN ELEVATIONS SHOWN. NO VALLEYS OR PEAKS PERMITTED IN GRAVITY FLOW LINES. YARD PIPING DRAWINGS DO NOT INDICATE VERTICAL BENDS AND TRANSITIONS. WHEN NECESSARY, MAKE VERTICAL TRANSITIONS OR FURNISH AND INSTALL VERTICAL BENDS AT NO EXTRA COST. DO NOT EXCEED MANUFACTURER'S RECOMMENDATIONS FOR CURVATURE OF LINES AND/OR DEFLECTION OF PIPE JOINTS. ALL VERTICAL TRANSITIONS AND BENDS TO BE DOCUMENTED ON REQUIRED "AS-BUILT DRAWINGS."
23. FIELD VERIFY LOCATIONS OF EXISTING PIPE. ARRANGE NEW PIPING AS NECESSARY TO AVOID INTERFERENCE AND PROVIDE CLEARANCE NOTED. ALL CHANGES IN PIPING SHOWN TO BE DOCUMENTED ON REQUIRED "AS-BUILT DRAWINGS."
24. MAINTAIN MINIMUM CLEARANCE OF 3 FEET FROM EDGE OF STRUCTURES TO CLOSEST EDGE OF PIPELINE ADJACENT AND PARALLEL TO EDGE OF STRUCTURE UNLESS OTHERWISE NOTED ON PLANS.
25. EXISTING STRUCTURES, UTILITIES AND PIPING ARE SHOWN FROM AVAILABLE RECORDS AT THE TIME THIS PLAN SET WAS DEVELOPED. IT IS THE CONTRACTOR'S RESPONSIBILITY TO DETERMINE AND VERIFY THE LOCATION AND DEPTH OF ALL EXISTING STRUCTURES, UTILITIES AND PIPING WITHIN THE CONSTRUCTION AREA PRIOR TO THE BEGINNING OF CONSTRUCTION. ANY DAMAGE TO THE EXISTING STRUCTURES, UTILITIES AND PIPING THAT IS RELATED TO THE NEW CONSTRUCTION SHALL BE RESTORED BY THE CONTRACTOR AT NO ADDITIONAL COST TO THE OWNER.
26. PRIOR TO FABRICATION OF NEW PIPING AND EXCAVATION FOR NEW STRUCTURES, ELECTRICAL CONDUIT, NEW PIPING AND/OR OTHER PROPOSED UTILITIES, CONTRACTOR SHALL BE RESPONSIBLE FOR VERIFYING THE LOCATION OF ALL EXISTING PIPING AND UTILITIES IN THE CONSTRUCTION AREA. AT TIE-IN CONNECTION LOCATIONS, VERIFY EXISTING CONDITIONS AND ELEVATIONS BEFORE FABRICATION OF NEW PIPING. THE CONTRACTOR SHALL INCLUDE IN THE BID COST FOR TEMPORARILY RELOCATING EXISTING UTILITIES AS REQUIRED FOR CONSTRUCTION OF PROPOSED ITEMS AND REINSTALLING THEM.
27. ALL PIPELINES SHALL HAVE A MINIMUM COVER OF 36" (UNLESS NOTED OTHERWISE). PIPES SHALL BE ROUTED AS SHOWN UNLESS MINOR REVISIONS ARE NECESSARY TO MISS EXISTING PIPES, STRUCTURES, ETC. CONTRACTOR SHALL BE RESPONSIBLE FOR FURNISHING ALL FITTINGS AND ADAPTERS REQUIRED TO MAKE THE ROUTING CHANGES. CONTRACTOR SHALL INCLUDE COST FOR THIS IN THE BID. ANY VARIANCES SHALL BE APPROVED BY ENGINEER.
28. CONTRACTOR SHALL MAKE CONNECTIONS TO EXISTING PIPE, STRUCTURES, EQUIPMENT, ETC. AS REQUIRED AND SHALL PROVIDE ALL FITTINGS, ADAPTERS AND APPURTENANCES REQUIRED TO MAKE THE CONNECTIONS. PROVIDE ALL SUPPORTS REQUIRED FOR A RIGID INSTALLATION AND TO HAVE A COMPLETE AND WORKING SYSTEM.
29. PIPES DESIGNATED TO BE DEMOLISHED MAY BE COMPLETELY REMOVED, OR MAY BE CUT AND ALL OPEN ENDS PLUGGED OR CAPPED, UNLESS OTHERWISE DIRECTED. PIPES ABANDONED IN PLACE SHALL BE CAPPED WITH EITHER CONCRETE, BLIND FLANGE OR M.J. PLUG. ABANDONED PIPING UNDER NEW ROADS AND STRUCTURES SHALL BE COMPLETELY REMOVED. BACKFILL TRENCH WITH LEAN CONC. OR STRUCTURAL EARTH FILL AND COMPACT IN ACCORDANCE WITH SPECIFICATIONS. PIPES TO BE ABANDONED IN PLACE SHALL BE EMPTIED OF ALL CONTENTS. ALL TEMPORARY PIPES, FITTINGS AND SUPPORTS SHALL BE REMOVED COMPLETELY PRIOR TO FINAL COMPLETION.
30. CONTRACTOR SHALL VERIFY THAT PIPING SHOWN TO BE ABANDONED OR AS PREVIOUSLY ABANDONED IS NO LONGER IN SERVICE. LINES IN SERVICE SHALL BE MAINTAINED UNTIL NO LONGER REQUIRED BY THE OWNER.
31. EXISTING PIPES ABANDONED IN PLACE OR TO BE REMOVED MAY NOT BE SHOWN. WHERE PIPING TO BE ABANDONED MUST REMAIN IN SERVICE UNTIL COMPLETION OF OTHER PHASE WORK, AND IT CONFLICTS WITH NEW PIPING, TEMPORARILY RELOCATE TO MAINTAIN SERVICE. CONTRACTOR SHALL PROVIDE ALL NECESSARY APPURTENANCES FOR THE TEMPORARY RELOCATION.
32. CONTRACTOR SHALL REROUTE THE EXISTING PIPING IF REQUIRED TO AVOID THE PROPOSED STRUCTURES. THE EXISTING PIPE SHALL REMAIN IN SERVICE UNTIL NEW PIPING AND FACILITIES ARE READY TO BE PLACED INTO SERVICE. DOWNTIME SHALL BE COORDINATED WITH THE OWNER UNLESS SPECIFIED OTHERWISE IN THE CONTRACT DOCUMENTS OR SHOWN OTHERWISE. ALL REMAINING PIPING, WHETHER IN SERVICE OR ABANDONED, SHALL BE NOTED ON THE RECORD DRAWINGS.
33. ALL PENETRATIONS (EXISTING AND PROPOSED) OF THE WALLS SHALL BE SEALED PER TYPICAL/STANDARD DETAILS OR AS DIRECTED BY ENGINEER.
34. THE CONTRACTOR SHALL TAKE SPECIAL PRECAUTIONS IN THE VICINITY OF ANY OVERHEAD ELECTRIC LINES. CONTRACTOR SHALL ABIDE BY NATIONAL ELECTRIC CODE AND ANY REQUIREMENT BY OWNER OF ELECTRIC LINES.
35. PROVIDE, INSTALL, AND REMOVE ALL SHEETING/SHORING REQUIRED TO PROTECT ALL EXISTING STRUCTURES, PIPES AND FACILITIES.
36. ALL DEMOLISHED STRUCTURES AND NON-SALVAGED EQUIPMENT AS WELL AS EXCESS EXCAVATED SOILS, SHALL BE REMOVED AND DISPOSED OF AS SOON AS POSSIBLE IN ACCORDANCE WITH FEDERAL, STATE AND LOCAL LAWS, REGULATIONS AND OTHER ORDINANCES AT NO ADDITIONAL COST TO OWNER.
37. CONTRACTOR SHALL REPAIR ANY EXISTING PAVEMENT DEMOLISHED FOR PIPING INSTALLATION OR MODIFICATION WORK. THE PAVEMENT SHALL BE RETURNED TO EXISTING CONDITION AS SHOWN IN PAVEMENT REPAIR DETAILS.
38. CONTRACTOR SHALL COMPLETELY REMOVE AND PROPERLY DISPOSE OF ALL STRUCTURES DESIGNATED FOR DEMOLITION, AS SOON AS POSSIBLE.
39. CONTRACTOR SHALL VERIFY LOCATION OF ALL ARCHITECTURAL, MECHANICAL AND ELECTRICAL ITEMS BEFORE PLACING ANY STRUCTURAL STEEL OR CONCRETE. STRUCTURAL DIMENSIONS AND OPENINGS CONTROLLED BY ARCHITECTURAL, MECHANICAL OR ELECTRICAL EQUIPMENT SHALL BE VERIFIED BY THE CONTRACTOR PRIOR TO CONSTRUCTION.
40. DURING CONSTRUCTION, STRUCTURES SHALL BE PROTECTED BY BRACING OR WHATEVER MEANS REQUIRED WHEREVER EXCESSIVE CONSTRUCTION LOADS OCCUR.
41. MECHANICAL AND ELECTRICAL EQUIPMENT SUPPORTS, ANCHORAGES, OPENING, RECESSES AND REVEALS NOT SHOWN ON THE STRUCTURAL DRAWINGS BUT REQUIRED BY OTHER CONTRACT DRAWINGS SHALL BE PROVIDED PRIOR TO CASTING CONCRETE.
42. CONTRACTOR SHALL BE RESPONSIBLE FOR FIELD VERIFYING ALL EXISTING CONDITIONS INCLUDING LOCATION AND DIMENSIONS OF ALL EXISTING CONSTRUCTION AND UTILITIES. CONTRACTOR SHALL NOTIFY ENGINEER IF THERE IS A CONFLICT BETWEEN THE CONTRACT DOCUMENTS AND EXISTING CONSTRUCTION BEFORE PROCEEDING WITH WORK.
43. THE CONTRACTOR SHALL CONTACT THE PROPER UTILITY REPRESENTATIVE FOR QUESTIONS AND/OR COORDINATION OF ANY EXISTING UTILITIES.
44. ALL NEW UNISTRUT, ANCHORS, SUPPORT SYSTEMS AND FASTENING HARDWARE SHALL BE 316 STAINLESS STEEL WITH ANTI-SEIZE COMPOUND APPLIED.
45. EXISTING CONTOURS IN PLANS ARE SHOWN FOR TERRAIN RELIEF ONLY. ALL ELEVATIONS SHALL BE VERIFIED.
46. EXCAVATION ADJACENT TO OR CROSSING EXISTING UTILITIES THAT ARE TO REMAIN, SHALL BE PERFORMED BY HAND AND IN SUCH A MATTER AS TO AVOID DAMAGE TO EXISTING UTILITIES, UNLESS OTHERWISE SHOWN ON THE DRAWINGS.
47. ALL DEMOLISHED PIPING AND APPURTENANCES, CONDUITS, ELECTRIC WIRING AND EQUIPMENT ARE SUBJECT TO SALVAGE BY THE OWNER. OWNER WILL DECIDE IF THESE ITEMS SHALL BE DISPOSED OF BY THE CONTRACTOR. ALL DISPOSED EQUIPMENT WILL BE REMOVED FROM THE SITE BY THE CONTRACTOR.
48. ANY EXISTING PIPING THAT IS AFFECTED BY NEW CONSTRUCTION OR NEW PIPING INSTALLATION, UNLESS DEMOLISHED AND REMOVED, SHALL BE RETURNED TO ORIGINAL OR BETTER CONDITION AT NO ADDITIONAL COST TO THE OWNER. PIPING REPAIR SHALL INCLUDE CONSIDERATION FOR BACKFILL, ENCASEMENT, SUPPORTS, RESTRAINTS, FITTINGS, VALVES, HEAT TRACINGS, INSULATION AND ANY TYPICAL OR SPECIAL COATINGS THAT ARE APPLIED TO THE INTERIOR AND/ OR EXTERIOR OF THE PIPING AND IT'S APPURTENANCES.
49. UNLOADING AND STORAGE OF EQUIPMENT SHALL BE THE RESPONSIBILITY OF THE CONTRACTOR WHO SHALL INSPECT ALL EQUIPMENT FOR APPARENT DAMAGE. EQUIPMENT WHICH IS FOUND TO HAVE DAMAGED COMPONENT(S) WILL NOT BE ACCEPTED UNTIL THE DAMAGED COMPONENT(S) ARE PROPERLY REPAIRED OR REPLACED BY THE VENDOR. ALL MAJOR EQUIPMENT INCLUDING, BUT NOT LIMITED TO, GATES, PUMPS, BULK STORAGE TANK, MOTORS, VALVES, AND ELECTRICAL EQUIPMENT SHALL BE STORED INDOORS. WHEN THIS EQUIPMENT IS STORED INDOORS, IT SHALL NEVER BE IN DIRECT SUNLIGHT, AND THE INDOOR TEMPERATURE SHALL BE MAINTAINED AT A LEVEL SATISFACTORY TO THE VENDOR. THE CONTRACTOR IS RESPONSIBLE FOR PROVIDING THE INDOOR STORAGE FACILITY OR ENCLOSURE.
50. METHODS OF PROVIDING FOR TRENCH SAFETY:
    - A. PROTECTIVE SYSTEMS SHALL BE AS DEFINED AND DESCRIBED IN 29 CFR 1962.652, "REQUIREMENTS FOR PROTECTIVE SYSTEMS"
    - B. IT IS THE DUTY, RESPONSIBILITY AND PREROGATIVE OF THE CONTRACTOR TO DETERMINE THE SPECIFIC APPLICABILITY OF ANY PROPOSED TRENCH SAFETY SYSTEM FOR EACH FIELD CONDITION ENCOUNTERED ON THE PROJECT. CONTRACTOR SPECIFICALLY HOLDS THE OWNER, ENGINEER, AND ANY OTHER OF THE DESIGNATED REPRESENTATIVES HARMLESS IN ANY ACTIONS RESULTING FROM THE FAILURE OR INADEQUACY OF THE TRENCH SAFETY SYSTEM USED TO COMPLETE THE PROJECT.
51. UNLESS OTHERWISE NOTED ON THE DRAWING OR EXCLUDED WITHIN THIS NOTE, SLOPING/BENCHING, TRENCH SHIELDING WITH TRENCH BOXES, AND/OR SHEETING/SHORING/BRACING PROTECTIVE SYSTEM MAY BE USED ON THIS PROJECT.
52. RESTRICTIONS ON THE USE OF THE VARIOUS PROTECTIVE SYSTEM FOR THIS PROJECT ARE AS FOLLOWS:

SLOPING OR BENCHING:	WHERE SPACE PERMITS
TRENCH SHIELDS/BOXES:	LIMIT OF TWO STACKED ON ONE ANOTHER
SHEETING/SHORING/BRACING:	NO RESTRICTION

53. CONTRACTOR SHALL NOT INTERFERE WITH ANY PLANT OPERATIONS, PLANT OPERATING STAFF FUNCTIONS, OR CHEMICAL DELIVERIES. EXISTING FACILITIES SHALL REMAIN IN OPERATION CONTINUOUSLY THROUGHOUT CONSTRUCTION. INDIVIDUAL FACILITIES CAN BE TAKEN OUT OF SERVICE FOR A LIMITED DURATION TO FACILITATE CONSTRUCTION AS SPECIFIED IN THE CONTRACT DOCUMENTS.
54. ALL PIPING ON THE DISCHARGE SIDE OF THE PUMPS INCLUDING INDIVIDUAL DISCHARGE PIPING, DISCHARGE HEADER PIPING, FLOW METER RUN PIPING, AND ANY RAW WATER PIPING NOT PART OF THE TUNNEL MAY BE CONSTRUCTED OF DUCTILE IRON PER SPECIFICATION SECTION 33 05 01.02 OR STEEL PER SPECIFICATION SECTION 33 11 13.13.

ISSUED FOR BID

Freese and Nichols, Inc.
Texas Registered Engineering Firm F-2144

STATE OF TEXAS
SOMNATH CHILUKURI
118309
LICENSED PROFESSIONAL ENGINEER
01-19-2022

FREESE NICHOLS
10497 Town and Country Way, Suite 600
Houston, Texas 77024
Phone - (713) 600-6800
Web - www.freese.com

CITY OF BEAUMONT
COLLIER'S FERRY PUMP STATION
GENERAL
GENERAL CONSTRUCTION NOTES I

F&N JOB NO.	BMT20326
DATE	01/07/2022
DESIGNED	LVR
DRAWN	WFA
REVISED	
CHECKED	ACH
FILE NAME	GN-CONST-NOTES.dwg

NO.	ISSUE	BY	DATE

VERIFY SCALE 0 1 — Bar is one inch on original drawing. If not one inch on this sheet, adjust scale.

SHEET G-3
SEQ. 3

ACAD Rel: 24.0s (LMS Tech)
Filename: N:\WW\Drawings\GN-CONST-NOTES.dwg
Last Saved: 1/10/2022 3:24 PM Saved By: 02139

Plot Date: 1/13/2022 2:24 PM Plot By: 02139 Filename: N:\WW\Drawings\GN-CONST-NOTES.dwg

STORM AND DRAINAGE

1. STORM SEWER SYSTEM, MANHOLES, AND INLETS SHALL BE CONSTRUCTED IN ACCORDANCE WITH THE CITY OF BEAUMONT STANDARD SPECIFICATION.

2. ALL CHANNEL OR SWALE SIDE SLOPES AND/OR OTHER AREAS REQUIRING SEEDING AS DETERMINED BY THE ENGINEER, TO BE HYDROMULCH SEEDED UNLESS OTHERWISE NOTED.

WATER LINES

1. WATER MAIN CONSTRUCTION SHALL BE IN ACCORDANCE WITH THE CITY OF BEAUMONT STANDARD SPECIFICATION AND STANDARD DETAIL.

2. NOTIFY THE CITY WHEN SYSTEM IS PRESSURE TESTED.

3. ALL WATER LINES ARE TO BE HYDROSTATICALLY TESTED BY THE CONTRACTOR IN ACCORDANCE WITH SPECIFICATIONS. CONTRACTOR SHALL NOTIFY CHIEF ENGINEERING INSPECTOR AT THE CITY OF BEAUMONT ENGINEERING DEPARTMENT AT LEAST 24 HOURS PRIOR TO THE HYDROSTATIC TESTS.

4. CONTRACTOR TO PROVIDE ADEQUATE RESTRAINED JOINT CONSTRUCTION AT ALL TEES, WYES, BENDS, CROSSES, FLUSHING VALVES AND OFFSETS TO WITHSTAND TEST PRESSURE AS SPECIFIED.

5. ALL WATER VALVES SHALL OPEN COUNTER-CLOCKWISE AND SHALL BE OF THE RESILIENT SEAT TYPE.

6. ALL FLANGES BELOW GRADE SHALL BE INSULATED. FIRST ABOVEGROUND JOINT OR FIRST JOINT WITHIN A VAULT SHALL BE ISOLATED WITH AN INSULATING JOINT KIT.

7. CONTRACTOR SHALL PROVIDE FOR A MINIMUM OF 6 INCHES CLEARANCE AT THE STORM SEWER AND WATERLINE CROSSINGS AND THE SANITARY SEWER AND WATERLINE CROSSINGS. THE WATERLINE SHALL BE LOCATED AT A HIGHER LEVEL THAN THE SEWER WHENEVER POSSIBLE.

STORMWATER POLLUTION PREVENTION PLAN

1. THE CONTRACTOR SHALL CONTROL EROSION AND SEDIMENTATION PER APPLICABLE JURISDICTIONAL PERMITS, LAWS, AND REGULATIONS.

2. CONTRACTOR SHALL MAINTAIN FLOW IN DRAINAGE DITCHES AND SWALES AT ALL TIMES AND PROVIDE TEMPORARY STRUCTURAL OR NON-STRUCTURAL STORMWATER PROTECTION AND POLLUTION PREVENTION MEASURES (SWPPP) THROUGHOUT THE PROJECT SITE AND PROJECT DURATION WHERE REQUIRED. METHODS USED BY CONTRACTOR TO MAINTAIN FLOW IN DITCHES AND PROVIDED SWPPP MEASURES MUST BE ACCEPTABLE TO THE CONSTRUCTION MANAGER, CITY OF BEAUMONT AND THE ENGINEER.

3. THE CONTRACTOR SHALL MINIMIZE TURBIDITY IN WATERWAYS DURING ALL PHASES OF THE PROJECT. THE CONTRACTOR SHALL EMPLOY METHODS TO ENSURE MINIMUM TURBIDITY FROM NEAR AND LONG-TERM EROSION FROM FILLS, SPOIL, AND DEVEGETATED AREAS DURING AND FOLLOWING CONSTRUCTION.

4. CONTRACTOR SHALL RE-ESTABLISH THE GRASS AND MAINTAIN IT IN ALL AREAS THAT ARE DAMAGED OR DISTURBED BY CONSTRUCTION ACTIVITIES UNTIL FINAL COMPLETION.

CONTROL OF WATER

1. CONTROL OF WATER FOR THE PURPOSES OF THESE CONTRACT DOCUMENTS MEANS:

   GROUNDWATER (PRESSURIZED OR STATIC)
   SURFACE WATER (CANALS, EXISTING CONDUITS, TEMPORARY CONDUITS)
   WAVES, SPLASHES, OR RUNUP FROM THE CANAL OR DITCH
   TIDES, STORM SURGE AND FLOATING DEBRIS ASSOCIATED WITH NECHES RIVER.
   WATER RESULTING FROM METEOROLOGICAL EVENTS

   SEE SECTION 33 73 16 - GROUNDWATER CONTROL FOR REQUIREMENTS PERTAINING TO TUNNEL AND SHAFT EXCAVATION AND CONSTRUCTION.

2. GROUNDWATER LEVELS BELOW GROUND SURFACE ELEVATION (PRESSURIZED AND STATIC) AS WELL AS SURFACE WATER LEVELS CAN VARY. CONTRACTOR SHALL INCORPORATE ADEQUATE MEANS AND METHODOLOGIES TO ENSURE THAT WATER DOES NOT NEGATIVELY AFFECT THE FOUNDATION SOILS BENEATH THE FOUNDATION OF ANY STRUCTURE SHOWN ON THESE CONSTRUCTION DRAWINGS. 3" MUD SLABS ARE REQUIRED BENEATH ANY HORIZONTAL CONCRETE PLACEMENT OF ALL STRUCTURES. CONTRACTOR SHALL EXCAVATE AS NECESSARY TO ENSURE THE PROPER ELEVATIONS OF THE STRUCTURES ARE MET. DUE TO THE HIGH PLASTICITY OF THE SOILS ASSOCIATED WITH THIS PROJECT, THE MUD SLABS WILL BE REQUIRED TO BE PLACED WITHIN 24 HOURS OF EXCAVATION FOR A GIVEN FOUNDATION.

3. THE 100 YEAR WATER SURFACE ELEVATION NEAR THE PROJECT SITE IS ESTIMATED TO BE 13.2 FT-MSL

4. THE CONTRACTOR SHALL BE RESPONSIBLE FOR PROVIDING ANY DEWATERING SYSTEM, TEMPORARY INITIAL SUPPORT SYSTEM OR OTHER TEMPORARY CONSTRUCTION SYSTEM THAT MAY BE REQUIRED TO PERFORM THE WORK DESCRIBED IN THESE CONTRACT DOCUMENTS IN THE DRY. CONTRACTOR SHALL REMOVE ANY TEMPORARY MEASURES EMPLOYED FOR CONSTRUCTION PURPOSES AFTER CONSTRUCTION (OR WHEN THE TEMPORARY MEASURE HAS FULFILLED ITS INTENDED PURPOSE). DESIGN OF TEMPORARY INITIAL SUPPORT SYSTEM SHALL BE PERFORMED BY A PROFESSIONAL ENGINEER LICENSED AND IN GOOD STANDING IN THE STATE OF TEXAS.

5. ACCORDING TO THE NATIONAL HURRICANE CENTER HURRICANE SEASON IS FROM JUNE 1 UNTIL NOVEMBER 30. PORTIONS OF THIS PROJECT WILL BE CONDUCTED DURING THIS TIME. CONTRACTOR SHALL BE PREPARED FOR HURRICANE ACTIVITY SHOULD CONDITIONS WARRANT IT. THIS INCLUDES SPECIAL FOCUS ON THE DESIGN AND IMPLEMENTATION OF THE COFFERDAM SYSTEMS.

6. CONTRACTOR TO CLEARLY UNDERSTAND THAT THE PROPOSED EXCAVATION LIMITS HAVE THE POTENTIAL TO FILL DURING RAINFALL EVENTS. IT IS CONTRACTOR'S RESPONSIBILITY TO BE AWARE OF WEATHER CONDITIONS AND BE PREPARED TO TAKE NECESSARY ACTIONS.

SURVEY/CONTROL NOTES

1. CONTROL POINTS AND BENCHMARKS ARE LOCATED ON-SITE AS INDICATED ON THE PROPOSED CONTROL PLAN.

2. CONTRACTOR IS RESPONSIBLE FOR PROVIDING CONSTRUCTION STAKING. CONTRACTOR WILL VERIFY ACTUAL CONDITIONS WITH STAKING.

EARTHWORK NOTES

1. EXISTING CONTOURS IN PLANS ARE SHOWN FOR TERRAIN RELIEF ONLY, ALL ELEVATIONS SHOULD BE VERIFIED.

2. PROPOSED CONTOUR LINES, SPOT ELEVATIONS AND SLOPE INDICATORS REPRESENT FINISHED GRADES AS INDICATED ON THE GRADING PLAN.

3. CONTRACTOR SHALL PROVIDE ANY/ALL TEMPORARY SLOPE PROTECTION (INCLUDING SHEET PILING) NECESSARY TO PREVENT EMBANKMENTS FROM SLOUGHING DURING CONSTRUCTION. TEMPORARY MEASURES ARE TO BE REMOVED WHEN CONSTRUCTION IS COMPLETED. CONTRACTOR'S FAILURE TO ADEQUATELY PROTECT/MAINTAIN SLOPES WHICH RESULTS IN SLOUGHING SHALL BE REPAIRED BY THE CONTRACTOR AT NO ADDITIONAL COST.

4. THE CONTRACTOR SHALL NOT DISPOSE OF ANY EXCAVATED MATERIALS WITHIN AN AREA DESIGNATED AS BEING WITHIN THE 100-YEAR FLOOD PLAIN. THE CONTRACTOR SHOULD VERIFY THE FLOOD PLAIN STATUS OF ANY PROPOSED DISPOSAL SITE.

5. GRADING SHALL COMMENCE UPON COMPLETION OF FILL PLACEMENT.

6. TOP OF WALK OR TOP OF LANDING ELEVATIONS AT BUILDING ENTRANCES/EXITS SHALL BE 1/4" MAXIMUM BELOW FINISHED FLOOR ELEVATION.

7. THE FINISHED GRADES SHOWN ON THIS PLAN REPRESENTS FINAL ELEVATIONS. CARE SHOULD BE TAKEN BY THE CONTRACTOR NOT TO INCREASE THESE FINISHED GRADES WITH LANDSCAPING OR OTHER ALTERATIONS. THE THICKNESS OF SOD, GRASS AND LANDSCAPING MATERIALS SHOULD BE DEDUCTED FROM THE FINISHED GRADE ELEVATIONS IN THESE PLANS IN ORDER TO DETERMINE THE GROUND ELEVATIONS DURING CONSTRUCTION.

8. CONTRACTOR SHALL REMOVE TOP EXISTING VEGETATION WITHIN DISTURBED AREA OF ROADWAYS, BUILDINGS, AND STRUCTURES.

9. STRIPPING STOCKPILE AND SOIL STOCKPILE ABOVE SHALL BE COMPRISED OF SOIL ONLY. NO CONCRETE, LIMBS, PAPER, WOOD, OR OTHER MISCELLANEOUS DEBRIS OR CONSTRUCTION WASTE MAY BE PLACED IN EITHER STOCKPILE.

10. AREAS INDICATED AS GRADE TO DRAIN SHALL HAVE A MINIMUM SLOPE OF 1% TOWARDS AN INLET OR SWALES.

11. THE CONTRACTOR SHALL VERIFY THE SUITABILITY OF ALL EXISTING AND PROPOSED SITE CONDITIONS INCLUDING GRADES AND DIMENSIONS BEFORE COMMENCEMENT OF CONSTRUCTION. THE ENGINEER SHALL BE NOTIFIED IMMEDIATELY OF ANY DISCREPANCIES. MINOR ADJUSTMENT TO FINISH GRADE TO ACCOMPLISH SPOT DRAINAGE IS ACCEPTABLE. IF NECESSARY, UPON PRIOR APPROVAL OF THE ENGINEER, PAVING INSTALLED SHALL "FLUSH OUT" AT ANY JUNCTURE WITH EXISTING PAVING.

12. SIDEWALKS ADJACENT TO THE PROPOSED BUILDING SHALL HAVE A CROSS SLOPE OF 2% MAXIMUM AWAY FROM THE BUILDING UNLESS INDICATED OTHERWISE ON THE GRADING PLAN.

13. ALL AREAS DISTURBED SHALL BE RESTORED AND GRADED TO DRAIN.

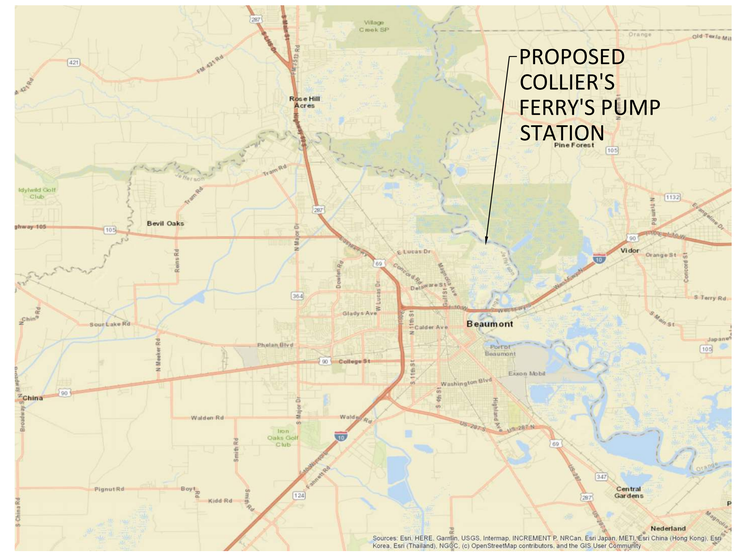

1 VICINITY MAP

NOT TO SCALE

ISSUED FOR BID

Freese and Nichols, Inc.
Texas Registered Engineering Firm F-2144

STATE OF TEXAS
SAMANTH CHILUKURI
118309
LICENSED
PROFESSIONAL ENGINEER
01-19-2022

FREESE AND NICHOLS
10497 Town and Country Way,
Suite 600
Houston, Texas 77024
Phone - (713) 600-6800
Web - www.freese.com

CITY OF BEAUMONT
COLLIER'S FERRY PUMP STATION

GENERAL
GENERAL CONSTRUCTION NOTES II

NO.	ISSUE	BY	DATE

VERIFY SCALE 0 1
Bar is one inch on original drawing, if not one inch on this sheet, adjust scale.

F&N JOB NO. BMT20326
DATE 01/07/2022
DESIGNED L.VR
DRAWN WF.A
REVISED
CHECKED A.CH
FILE NAME GN-CONST-NOTES.dwg

SHEET G-4
SEQ. 4

ACAD Rel: 24.0s (LMS Tech)
Filename: N:\WW\Drawings\GN-CONST-NOTES.dwg
Last Saved: 1/10/2022 3:24 PM Saved By: 02139

Plot Date: 1/13/2022 2:24 PM Plot By: 02139 Filename: N:\WW\Drawings\GN-CONST-NOTES.dwg

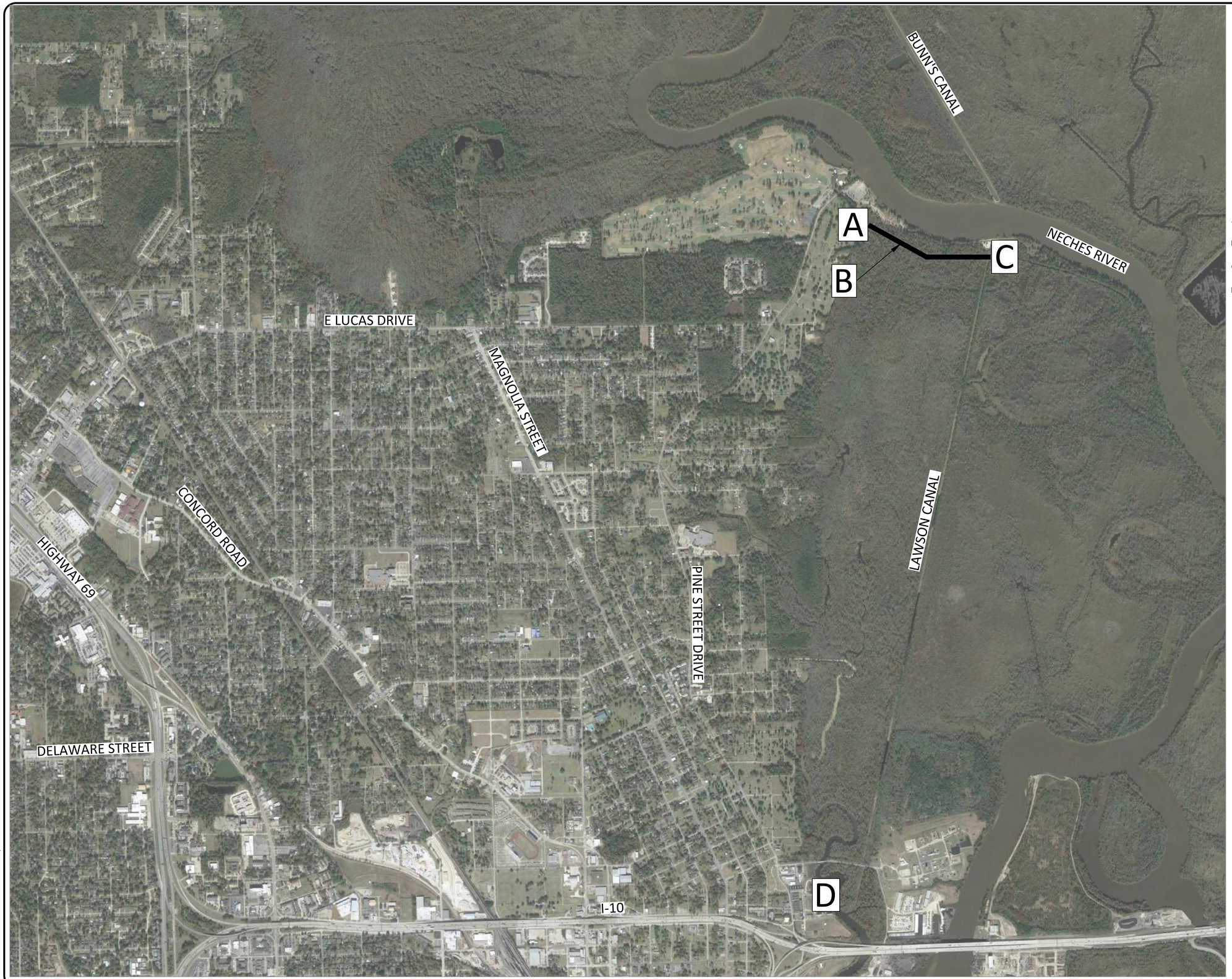

LEGEND

A. COLLIER'S FERRY PUMP STATION

B. RAW WATER TUNNEL

C. LAWSON RAW WATER PUMP STATION

D. PINE STREET SURFACE WATER TREATMENT PLANT

0 1000' 2000'
SCALE IN FEET

ISSUED FOR BID

Freese and Nichols, Inc.
Texas Registered Engineering Firm F-2144

01-19-2022

STATE OF TEXAS
SOMNATH CHILUKURI
118309
LICENSED
PROFESSIONAL ENGINEER

FREESE AND NICHOLS
10497 Town and Country Way,
Suite 600
Houston, Texas 77024
Phone - (713) 600-6800
Web - www.freese.com

CITY OF BEAUMONT
COLLIER'S FERRY PUMP STATION

CIVIL
OVERALL
KEY MAP

NO.	ISSUE	BY	DATE

F&N JOB NO. BMT20326
DATE 01/07/2022
DESIGNED LVR
DRAWN WFA
REVISED
CHECKED ACH
FILE NAME GN-OVAL-KEY-MAP.dwg

VERIFY SCALE 0 1
Bar is one inch on original drawing. If not one inch on this sheet, adjust scale.

SHEET G-5
SEQ. 5

ACAD Rel: 24.0s (LMS Tech)
Filename: N:\WW\Drawings\GN-OVAL-KEY-MAP.dwg
Last Saved: 12/21/2021 11:48 AM Saved By: 04295

Plot Date: 1/13/2022 2:26 PM Plot By: 02139 Filename: N:\WW\Drawings\GN-OVAL-KEY-MAP.dwg

EXISTING OR FUTURE CONDITION DESIGNATION

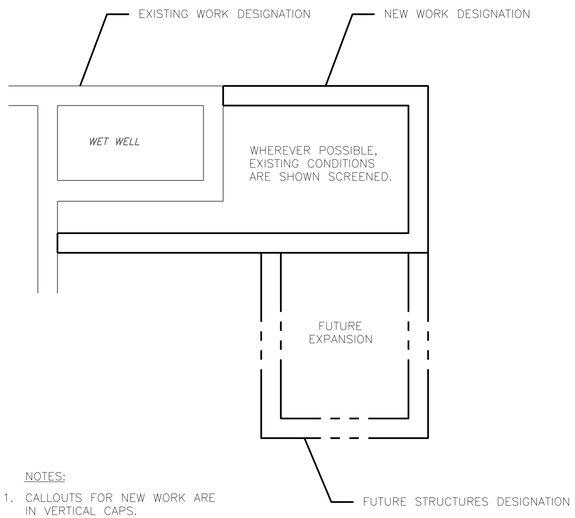

NOTES:

1. CALLOUTS FOR NEW WORK ARE IN VERTICAL CAPS.
2. FUTURE STRUCTURES SHOWN IN A PHANTOM LINE AND LABELED 'FUTURE'.

DRAWING, SECTION AND DETAIL TITLES

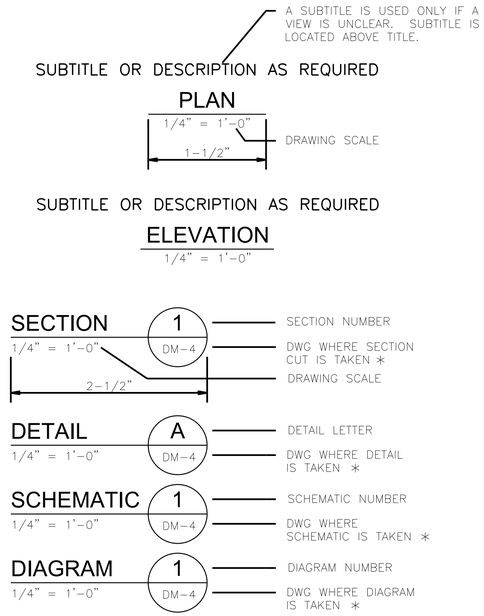

* IF SECTION, DETAIL, SCHEMATIC OR DIAGRAM IS DRAWN ON THE SAME SHEET THAT IT IS TAKEN FROM, REPLACE THE SHEET NUMBER WITH A HYPHEN. IF THE SECTION IS REFERENCED ON MULTIPLE SHEETS, THE SHEET NUMBER INDICATES THE FIRST SHEET THE SECTION IS TAKEN FROM.

DESIGN DISCIPLINE DESIGNATIONS

DESIGNATION	DESCRIPTION
G	GENERAL
C	CIVIL
S	STRUCTURAL
M	PROCESS MECHANICAL
H	HVAC
A	ARCHITECTUAL
E	ELECTRICAL
PI	PROCESS & INSTRUMENTATION

SECTION CUT SYMBOLS

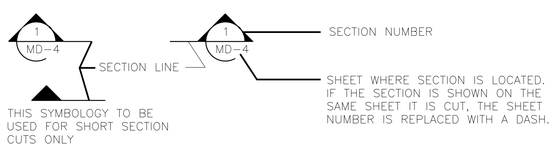

WHEN REFERENCING A SECTION IN A NOTE, USE 1/MD-4 FORMAT INSTEAD OF THE BUBBLE

FLOW DIAGRAM SHEET CONNECTIONS

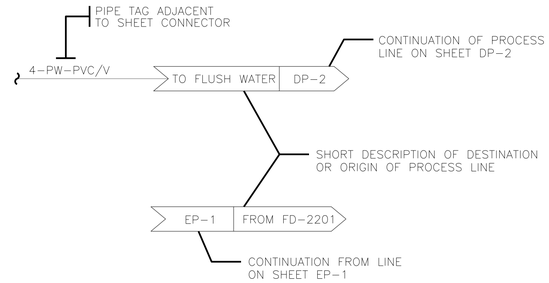

DETAIL CALL OUT SYMBOLS

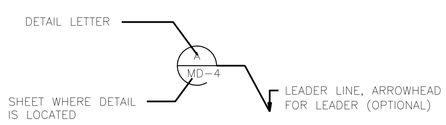

WHERE A NOTE IS REQUIRED FOR CLARITY, A/MD-4 FORMAT IS USED IN THE NOTE INSTEAD OF BUBBLE. IF MULTIPLE DETAILS REFER TO THE SAME AREA OF THE DRAWING, THE BUBBLES ARE STACKED SIDE BY SIDE.

DRAWING IDENTIFICATION SYSTEM

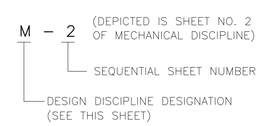

ISSUED FOR BID

Freese and Nichols, Inc.
Texas Registered Engineering Firm F-2144

FREESE AND NICHOLS
10497 Town and Country Way,
Suite 600
Houston, Texas 77024
Phone - (713) 600-6800
Web - www.freese.com

STATE OF TEXAS
SAMANTHA CHILAUSKAS
118309
LICENSED
PROFESSIONAL ENGINEER
01-19-2022

CITY OF BEAUMONT
COLLIER'S FERRY PUMP STATION

GENERAL
DRAWING STANDARDS AND NOMENCATURE

NO.	ISSUE	BY	DATE

F&N JOB NO. BMT20326
DATE 01/07/2022
DESIGNED LVR
DRAWN WFA
REVISED -
CHECKED ACH
FILE NAME GN-DWG-STAN-NOMEN.dwg

VERIFY SCALE Bar is one inch on original drawing. If not one inch on this sheet, adjust scale.
0 1

SHEET G-6
SEQ. 6

PIPE AND FITTING SYMBOLS

DOUBLE LINE PIPING	SINGLE LINE PIPING	FEATURE
		PROCESS PIPING
		EXISTING PROCESS PIPING
		FUTURE PROCESS PIPING
		WELDED JOINT
		DIRECTION OF FLOW
		SCREWED OR THREADED JOINT (SEE NOTE 1)
		FLANGED JOINT (SEE NOTE 1)
(F)	(R)	COUPLING FOR GROOVED END JOINTS: (F) FLEXIBLE OR (R) RIGID
		MECHANICAL JOINT (SEE NOTE 1)
		PUSH ON JOINT OR CAULKED BELL & SPIGOT JOINT (SEE NOTE 1)
		FLANGE x PLAIN END PIPE COUPLING (FLANGE ADAPTOR)
		FLANGE x PLAIN END PIPE COUPLING, RESTRAINED (FLANGE ADAPTOR, RESTRAINED)
		PIPE COUPLING (SLEEVE–TYPE)
		PIPE COUPLING, RESTRAINED (AWWA–11)
		FLEXIBLE COUPLING OR EXPANSION JOINT (SLEEVE TYPE)
		UNION
		FLEXIBLE COUPLING OR EXPANSION JOINT (BELLOWS TYPE)
		FLANGE GUARD
		PLUG
		PIPE TURNED 90° TOWARD
		PIPE TURNED 90° AWAY
		TEE IN PIPE RUN WITH BRANCH DOWN

PIPE AND FITTING SYMBOLS (CONT.)

DOUBLE LINE PIPING	SINGLE LINE PIPING	FEATURE
		TEE IN PIPE RUN WITH BRANCH UP
		PITCH PIPE TO LOW POINT
		MECHANICAL JOINT – RESTRAINED
		BALL JOINT
		QUICK CONNECT COUPLING
		HOSE COUPLING
		HOSE COUPLING w/CAP
		BLIND FLANGE
		DRAIN
		LIQUID QUICK DISCONNECT
		AIR QUICK DISCONNECT
		DIAPHRAM SEAL STANDARD
		FLEXIBLE HOSE CONNECTION

PIPE AND FITTING SYMBOLS NOTES:

1. GENERIC JOINT SYMBOL IS USED FOR ALL SINGLE LINE PIPING SHOWN ON THE INTERIOR AND EXTERIOR PIPING DRAWINGS.
2. UNLESS MODIFIED BY THE GENERAL PROJECT NOTES OR DETAILED ON THE LAYOUT AND SCHEMATIC DRAWINGS, PIPE AND FITTING JOINT REQUIREMENTS FOR THE VARIOUS PIPE MATERIALS ARE DEFINED IN THE SPECIFICATIONS AND ARE INDICATED ON THE PROCESS PIPE SCHEDULES

PIPE IDENTIFICATION SYSTEM

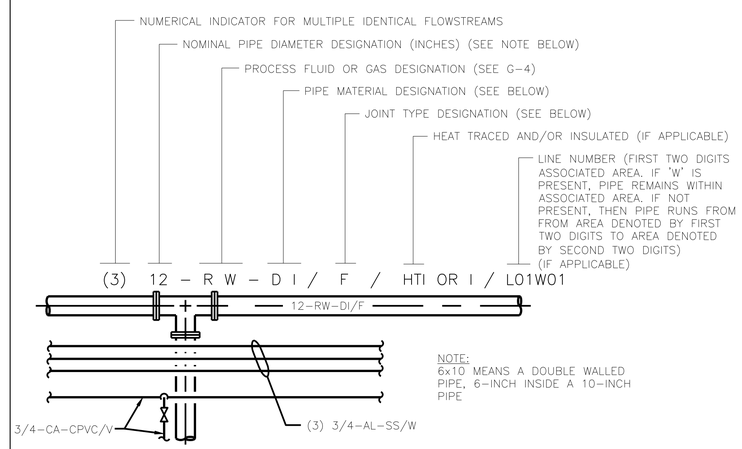

DEPICTED IS A 12–INCH DIAMETER DUCTILE IRON PIPE W/FLANGED JOINTS SCHEDULED TO TRANSPORT RAW WATER.

PIPE MATERIALS LEGEND

DESIGNATION	PIPE MATERIALS
ABS	ACRYLONITRILE – BUTADIENE – STYRENE
BS	BLACK STEEL
CI	CAST IRON
CIS	CAST IRON – SOIL
CM	CORRUGATED METAL
CPVC	CHLORINATED POLYVINYL CHLORIDE
CS	CARBON STEEL
CU	COPPER
DI	DUCTILE IRON
FRP	FIBER REINFORCED PLASTIC
GCS	GALVANIZED CARBON STEEL
HDPE	HIGH DENSITY POLYETHYLENE
PE	POLYETHLENE
PP	POLYPROPYLENE
PVC	POLYVINYL CHLORIDE
PVCD	POLYVINYL CHLORIDE (DOUBLED WALLED PVC CONTAINMENT WITH PVC CARRIER)
PVCT	POLYVINYL CHLORIDE CONTAINMENT PIPE WITH PTFE TUBING CARRIER
RBH	RUBBER HOSE
RC	REINFORCED CONCRETE
RCC	REINFORCED CONCRETE CYLINDER
SS	STAINLESS STEEL
STL	STEEL (CARBON)
VC	VITRIFIED CLAY

PIPE JOINT LEGEND

DESIGNATION	JOINT TYPE
BSM	BELL & SPIGOT – MORTAR JOINT
BSO	BELL & SPIGOT – RUBBER O RING
C	COMPRESSION (TUBE FITTINGS)
F	FLANGED
G	GROOVED
H	HEAT FUSION
MJ	MECHANICAL JOINT
PE	PLAIN END
PO	PUSH ON
POR	PUSH ON RESTRAINED
RMJ	RESTRAINED MECHANICAL JOINT
S	SOLDERED
SW	SOCKET WELDED
T	THREADED
V	SOLVENT CEMENTED
W	BUTT WELDED
QD	QUICK DISCONNECT COUPLING

ISSUED FOR BID

Freese and Nichols, Inc.
Texas Registered Engineering Firm F-2144

FREESE AND NICHOLS
10497 Town and Country Way,
Suite 600
Houston, Texas 77024
Phone - (713) 600-6800
Web - www.freese.com

STATE OF TEXAS
COMMONWEALTH OF VIRGINIA
SUDHEER CHILUKURI
118309
LICENSED
PROFESSIONAL ENGINEER
01-19-2022

CITY OF BEAUMONT
COLLIER'S FERRY PUMP STATION

GENERAL

PIPE LEGEND AND ABBREVIATIONS

F&N JOB NO.	BMT20326
DATE	01/07/2022
DESIGNED	LVR
DRAWN	WFA
REVISED	-
CHECKED	ACH
FILE NAME	GN-DWG-STAN-NOMEN.dwg

NO.	ISSUE	BY	DATE

VERIFY SCALE 0 1
Bar is one inch on original drawing. If not one inch on this sheet, adjust scale.

SHEET G-7
SEQ. 7

ACAD Rel: 24.0s (LMS Tech)
Filename: N:\WW\Drawings\GN-DWG-STAN-NOMEN.dwg
Last Saved: 1/13/2022 8:52 AM Saved By: 02139
Plot Date: 1/13/2022 2:26 PM Plot By: 02139 Filename: N:\WW\Drawings\GN-DWG-STAN-NOMEN.dwg

VALVE NUMBER, ASSIGNED BY PROCESS SYSTEM (SEE EQUIPMENT NUMBERING SYSTEM, THIS DRAWING)

SEQUENTIAL LETTER (USED WHEN MULTIPLE VALVES OF SAME TYPE USED FOR ONE PROCESS TRAIN)

B F V – 0 2 0 1 B

SEQUENTIAL NUMBER OR PARALLEL PROCESS TRAIN

VALVE TYPE ABBREVIATION

NOTE:
ALL CONTROL VALVES, ALL ELECTRICALLY ACTUATED VALVES AND ALL VALVES 2" OR LARGER OR > $1,000 WILL BE GIVEN INDIVIDUAL EQUIPMENT NUMBERS.

VALVE ABBREVIATIONS

ABBREVIATIONS	DESCRIPTION
ARV	AIR RELEASE VALVE
AVRV	AIR/VACUUM RELEASE VALVE
BFV	BUTTERFLY VALVE
CV	DUAL DISC CHECK VALVE
SV	SOLENOID VALVE
SAV	SURGE ANTICIPATOR VALVE

ABBREVIATION	DESCRIPTION
AH	ACCESS HATCH
BF	BLIND FLANGE
BLDG	BUILDING
CE	CONSTRUCTION ENTRANCE
CONC	CONCENTRIC
CPLG	COUPLING
CLR	CLEAR
DIA	DIAMETER
ECC	ECCENTRIC
F	FLANGED
FE	FLOW ELEMENT
FF	FINISHED FLOOR
FG	FINISHED GRADE
FL	FLOW LINE
FRP	FIBER REINFORCED PLASTIC
FS	FLOW SWITCH
FIT	FLOW INDICATING TRANSMITTER
GALV	GALVANIZED
HB	HOSE BIBB
HS	HOSE STATION
INV	INVERT ELEVATION
LCP	LOCAL CONTROL PANEL
LCS	LOCAL CONTROL STATION
LE	LEVEL ELEMENT
LIT	LEVEL INDICATING TRANSMITTER
LF	LINEAR FEET
LS	LEVEL SWITCH
LVL	LEVEL CONTROL PANEL
SMP	SURFACE MONITORING POINT
UMP	UTILITY MONITORING POINT
SSMP	STRUCTURAL SURFACE MONITORING POINT

ABBREVIATION	DESCRIPTION
M	MOTOR
MCP	MASTER CONTROL PANEL
MCC	MOTOR CONTROL CENTER
MO	MOTOR OPERATOR
MOV	MOTORIZED VALVE
NC	NORMALLY CLOSED
NO	NORMALLY OPEN
NTS	NOT TO SCALE
OD	OUTER DIAMETER
PI	PRESSURE GAGE WITH OR WITHOUT
PIT	PRESSURE INDICATING TRANSMITTER
PS	PRESSURE SWITCH
PT	PRESSURE TRANSMITTER
RED	REDUCER
RWP	RAW WATER PUMP
RWPS	RAW WATER PUMP STATION
SAV	SURGE ANTICIPATOR VALVE
SCH	SCHEDULE
SF	SILT FENCE
SLG	SLIDE GATE
TOB	TOP OF BANK
TOE	BOTTOM OF SLOPE
TP	TOP OF PAVEMENT
TOW	TOP OF WALL
TR	TOP OF RIM
TYP	TYPICAL
UN	UNION
VFD	VARIABLE FREQUENCY DRIVE

NOTE:
ONLY SITE/CIVIL AND PROCESS/MECHANICAL ABBREVIATIONS ARE SHOWN ON THIS DRAWING. FOR ADDITIONAL ABBREVIATIONS:

DRAWING H–1 FOR HVAC ABBREVIATIONS
DRAWING E–1 FOR ELECTRICAL ABBREVIATIONS
DRAWINGS PI–1 AND PI–2 FOR INSTRUMENT ABBREVIATIONS

EQUIPMENT NUMBERING SYSTEM

0100	SERIES	RAW WATER TUNNEL
0200	SERIES	RAW WATER PUMP STATION
0300	SERIES	RAW WATER PIPELINE
0400	SERIES	ELECTRICAL BUILDING

TYPICAL EQUIPMENT NUMBER

RWP - 0 2 0 3

EQUIPMENT TYPE ABBREVIATION

SYSTEM IDENTIFIER ASSIGNED BY PROCESS AREA

SEQUENTIAL NUMBERING

EXAMPLE SHOWN IS A RAW WATER PUMP NUMBER 3 IN SERIES 0200 (RAW WATER PUMP STATION)

ISSUED FOR BID

Freese and Nichols, Inc.
Texas Registered Engineering Firm F-2144

STATE OF TEXAS
SAMANTHA CHELLADURAI
118309
LICENSED
PROFESSIONAL ENGINEER
01-19-2022

FREESE AND NICHOLS
10497 Town and Country Way,
Suite 600
Houston, Texas 77024
Phone - (713) 600-6800
Web - www.freese.com

CITY OF BEAUMONT
COLLIER'S FERRY PUMP STATION

GENERAL
EQUIPMENT AND VALVE LEGEND AND ABBREVIATION

NO.	ISSUE	BY	DATE

F&N JOB NO. BMT20326
DATE 01/07/2022
DESIGNED L.VR
DRAWN W.F.A.
REVISED -
CHECKED A.C.H.
FILE NAME GN-DWG-STAN-NOMEN.dwg

VERIFY SCALE 0 1
Bar is one inch on original drawing. If not one inch on this sheet, adjust scale.

SHEET G-8
SEQ. 8

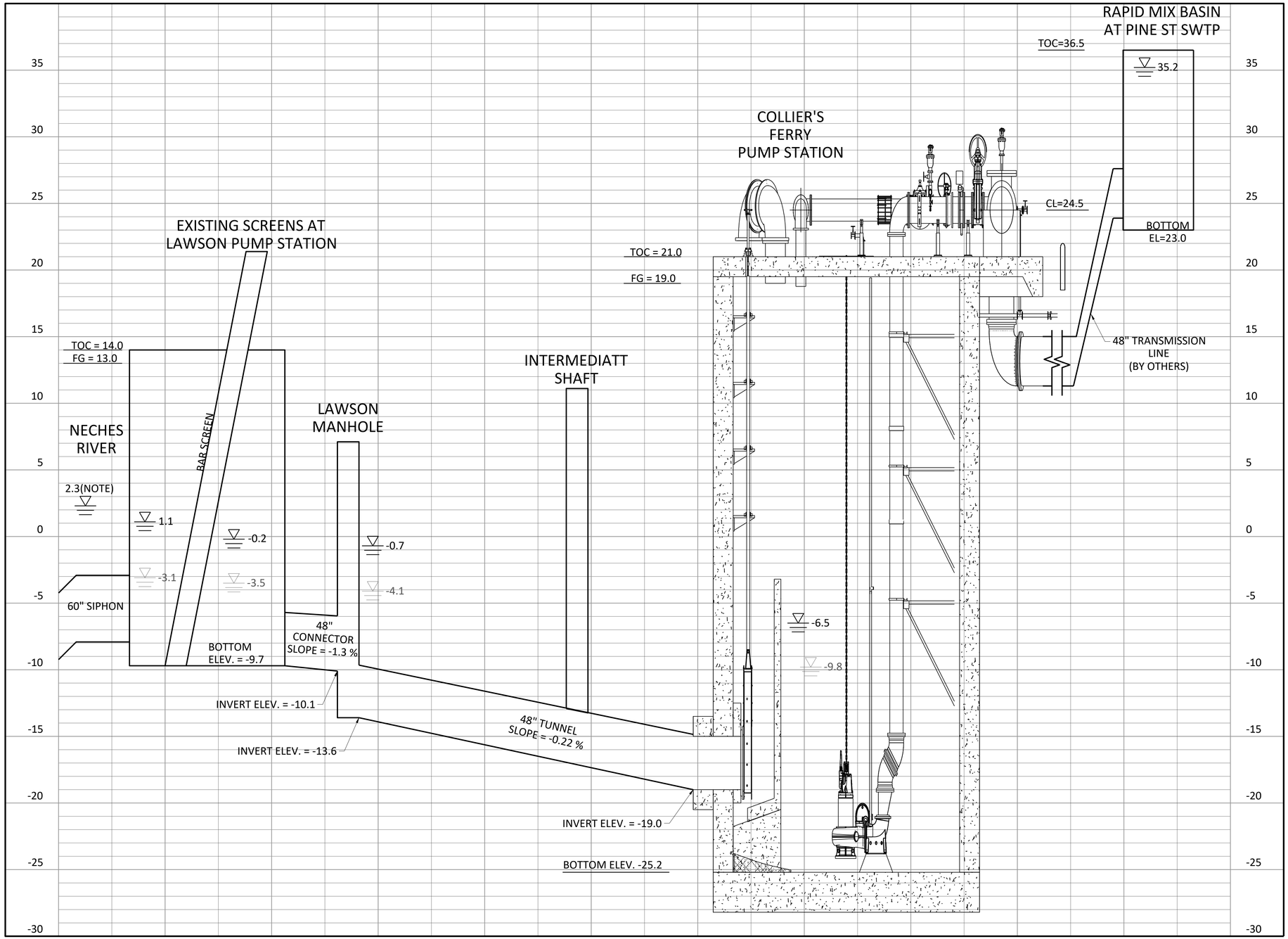

NOTES:

1. AVERAGE WATER SURFACE ELEVATION IN NECHES RIVER UPSTREAM OF SALT WATER BARRIER NEAR INTAKE OF BUNN'S CANAL (USGU 08041780)

LEGEND:

AVERAGE WSE AT 45 MGD

MINIMUM WSE AT 45 MGD

ISSUED FOR BID

Freese and Nichols, Inc.
Texas Registered Engineering Firm F-2144

STATE OF TEXAS
SOMNATH CHILUKURI
118309
LICENSED
PROFESSIONAL ENGINEER
01-19-2022

FREESE AND NICHOLS
10497 Town and Country Way,
Suite 600
Houston, Texas 77024
Phone - (713) 600-6800
Web - www.freese.com

CITY OF BEAUMONT
COLLIER'S FERRY PUMP STATION
GENERAL
HYDRAULIC PROFILE

NO.	ISSUE	BY	DATE

F&N JOB NO. BMT20326
DATE 01/07/2022
DESIGNED LVR
DRAWN WFA
REVISED
CHECKED ACH
FILE NAME GN-HYD-PROF.dwg

VERIFY SCALE 0 1
Bar is one inch on original drawing. If not one inch on this sheet, adjust scale.

SHEET G-9
SEQ. 9

ACAD Rel: 24.0s (LMS Tech)
Filename: N:\WW\Drawings\GN-HYD-PROF.dwg
Last Saved: 12/21/2021 11:51 AM Saved By: 04295

Plot Date: 1/13/2022 2:34 PM Plot By: 02139 Filename: N:\WW\Drawings\GN-HYD-PROF.dwg

ABBREVIATIONS

ABBR	DESCRIPTION
AS	AIR SUPPLY
CPU	CENTRAL PROCESSOR UNIT
DCU	DISTRIBUTED CONTROL UNIT
ES	ELECTRIC SUPPLY
FOC	FIBER OPTIC CABLE
FOM	FIBER OPTIC MODEM
FREQ	FREQUENCY
HDC	HISTORICAL DATA COLLECTION
I/O	INPUT/OUTPUT
MC	MOTOR CONTROLLER
OIT	OPERATOR INTERFACE TERMINAL
ORP	OXYGEN REDUCTION POTENTIAL
OWS	OPERATOR WORK STATION
PE	PRESSURE SENSOR
PIT	PRESSURE INDICATOR TRANSMITTER
PLC	PROGRAMMABLE LOGIC CONTROLLER
PS	POWER SUPPLY
PSH	PRESSURE SWITCH HIGH
PSL	PRESSURE SWITCH LOW
PW	PROCESS WATER
RIO	REMOTE INPUT OUTPUT
RTU	REMOTE TERMINAL UNIT
SE	SPEED SENSOR
SIK	SPEED INDICATE CONTROL STATION
SL	SLUDGE
SP	SET POINT
VFD	VARIABLE FREQUENCY DRIVE
SS	SOFT STARTER
SSRVS	SOLID STATE REDUCED VOLTAGE STARTER
TURB	TURBIDITY

HAND SWITCH ABBREVIATIONS

ABBR	DESCRIPTION
H/O/A	HAND/OFF/AUTO
L/R	LOCAL/REMOTE
H/O/S	HAND/OFF/SCADA
O/C	OPEN/CLOSE
L/O/C	LOCAL/OFF/COMPUTER
A/H	AUTO/HAND
L/O/R	LOCAL/OFF/REMOTE
L/A	LOCAL/AUTO
O/C/S	OPEN/CLOSE/STOP
O/O/A	ON/OFF/AUTO
L/C	LOCAL/COMPUTER
N/B	NORMAL/BYPASS

INSTRUMENT IDENTIFICATION

	PRIMARY LOCATION NORMALLY ACCESSIBLE TO OPERATOR (2)	FIELD MOUNTED	AUXILIARY LOCATION NORMALLY ACCESSIBLE TO OPERATOR (2)
DISCRETE INSTRUMENTS			
SHARED DISPLAY SHARED CONTROL			
COMPUTER FUNCTION			
PROGRAMMABLE LOGIC CONTROL			
		INSTRUMENT WITH LONG TAG NUMBERS	INSTRUMENTS SHARING COMMON HOUSING
	PILOT LIGHT	PANEL MOUNTED PATCHBOARD POINT 12	PURGE OR FLUSING DEVICE
	RESET FOR LATCH-TYPE ACTUATOR	DIAPHRAGM SEAL	UNDEFINED INTERLOCK LOGIC

(1) ABBREVIATIONS OF THE USER'S CHOICE SUCH AS IP1 (INSTRUMENT PANEL NO.1), IC2 (INSTRUMENT CONSOLE NO.2), CC3 (COMPUTER CONSOLE NO.3), ETC., MAY BE USED WHEN IT IS NECESSARY TO SPECIFY INSTRUMENT OR FUNCTION LOCATION.

(2) NORMALLY INACCESSIBLE OR BEHIND-THE-PANEL DEVICES OR FUNCTIONS MAY BE DEPICTED BY USING THE SAME SYMBOLS BUT WITH DASHED HORIZONTAL BARS, I.E.

LINE TYPES

SYMBOL	DESCRIPTION
	INSTRUMENT SUPPLY OR SOLENOID OPERATED VALVE (1)
	UNDEFINED SIGNAL
	PNEUMATIC SIGNAL (2)
	ELECTRIC SIGNAL
	HYDRAULIC SIGNAL
	CAPILLARY TUBE
	ELECTROMAGNETIC OR SONIC, SIGNAL (GUIDED) (3)
	ELECTROMAGNETIC OR SONIC, SIGNAL (NOT GUIDED) (3)
	INTERNAL SYSTEM LINK (SOFTWARE OR DATA LINK)
	MECHANICAL LINK
	PNEUMATIC BINARY SIGNAL (ON-OFF)
	ELECTRIC BINARY SIGNAL (ON-OFF)
	ELECTRIC ANALOG SIGNAL
	NON-CONNECTING LINES
	CONNECTING LINES

PIPING LABELS

SYMBOL	DESCRIPTION
X-XX	PIPE MATERIAL DI-DOCTILE IRON
	PIPE DIAMETER

GENERAL NOTES

(1) THE FOLLOWING ABBREVIATIONS ARE SUGGESTED TO DENOTE THE TYPES OF POWER SUPPLY. THESE DESIGNATIONS MAY ALSO BE APPLIED TO PURGE FLUID SUPPLIES.

AS - AIR SUPPLY
- HS - HYDRAULIC SUPPLY - OPTION
- IA - INSTRUMENT AIR - OPTION

NS - NITROGEN SUPPLY
PA - PLANT AIR
SS - STEAM SUPPLY
ES - ELECTRIC SUPPLY
WS - WATER SUPPLY
GS - GAS SUPPLY

THE SUPPLY LEVEL MAY BE ADDED TO THE INSTRUMENT SUPPLY LINE, E.G, AS-100, 100-PSIG AIR SUPPLY: ES-24DC, A 24-VOLT DIRECT CURRENT POWER SUPPLY.

(2) THE PNEUMATIC SIGNAL SYMBOL APPLIES TO A SIGNAL USING ANY GAS AS THE SIGNAL MEDIUM. IF A GAS OTHER THAN AIR IS USED, THE GAS MAY BE IDENTIFIED BY A NOTE ON THE SIGNAL SYMBOL OR OTHERWISE.

ELECTROMAGNETIC PHENOMENA INCLUDE HEAT, RADIO WAVES, NUCLEAR RADIATION AND LIGHT.

NOTE:
THIS IS A STANDARD LEGEND. THEREFORE, NOT ALL OF THIS INFORMATION MAY BE USED ON THIS PROJECT.

EXAMPLE SIGNALS

SYMBOL	DESCRIPTION
TRC W-XX-Y (A)	FIRST LETTER
	SUCCEEDING LETTERS
	THE TOTAL NUMBER OF UNITS PER SET (Y VARIES FROM 1 TO A)
	UNIT NUMBER (USED WHEN THERE ARE MULTIPLE UNITS WITH THE SAME WXX DESIGNATIONS)
	LOOP NUMBER (XX)
	AREA NUMBER (W)
	DIGITAL SYSTEM I/O INTERFACE. DIRECTION OF TRIANGLE DENOTES WHETHER INPUT OR OUTPUT.
	LETTER DENOTES SIGNAL TYPE. THE LETTER "A" DENOTES AN ANALOG SIGNAL. THE LETTER "D" DENOTES A DISCRETE SIGNAL.

INTERNATIONAL SOCIETY OF AUTOMATION TABLE

	FIRST LETTER (S)		SUCCEEDING LETTERS		
LETTER	PROCESS OR INITIATING VARIABLE	MODIFIER	READOUT OR PASSIVE FUNCTION	OUTPUT FUNCTION	MODIFIER
A	ANALYSIS (+)		ALARM		
B	BURNER, COMBUSTION		USERS CHOICE (+)	USERS CHOICE (+)	USERS CHOICE (+)
C	USER'S CHOICE (+)			CONTROL	
D	USER'S CHOICE (+)	DIFFERENTIAL			
E	VOLTAGE		SENSOR (PRIMARY ELEMENT)		
F	FLOW RATE	RATIO (FRACTION)			
G	USER'S CHOICE (+)		GLASS, VIEWING DEVICE		
H	HAND				HIGH
I	CURRENT (ELECTRICAL)		INDICATE		
J	POWER	SCAN			
K	TIME, TIME SCHEDULE	TIME RATE OF CHANGE		CONTROL STATION	
L	LEVEL		LIGHT		LOW
M	MOTOR	MOMENTARY			MIDDLE, INTERMEDIATE
N	USERS CHOICE (+)		USERS CHOICE (+)	USERS CHOICE (+)	USERS CHOICE (+)
O	USERS CHOICE (+)		ORIFICE, RESTRICTION		
P	PRESSURE, VACUUM		POINT (TEST) CONNECTION		
Q	QUANTITY	INTEGRATE, TOTALIZE			
R	RADIATION		RECORD		
S	SPEED, FREQUENCY	SAFETY		SWITCH	
T	TEMPERATURE			TRANSMIT	
U	MULTIVARIABLE		MULTIFUNCTION	MULTIFUNCTION	MULTIFUNCTION (+)
V	VIBRATION MECH. ANALYSIS			VALVE, DAMPER, LOUVER	
W	WEIGHT, FORCE		WELL		
X	UNCLASSIFIED (+)	X AXIS	UNCLASSIFIED	UNCLASSIFIED (+)	UNCLASSIFIED (+)
Y	EVENT, STATE OR PRESENCE	Y AXIS		RELAY, COMPUTE, CONVERT	
Z	POSITION, DIMENSION	Z AXIS		DRIVER, ACTUATOR, UNCLASSIFIED FINAL CONTROL ELEMENT	

(+) WHEN USED, EXPLANATION IS SHOWN ADJACENT TO INSTRUMENT SYMBOL. SEE ABBREVIATIONS AND LETTER SYMBOLS.

ISSUED FOR BID

Freese and Nichols, Inc.
Texas Registered Engineering Firm F-2144

STATE OF TEXAS
REBECCA SANDOVAL
102369
LICENSED
PROFESSIONAL ENGINEER
01/26/2022

FREESE AND NICHOLS
10497 Town and Country Way,
Suite 600
Houston, Texas 77024
Phone - (713) 600-6800
Web - www.freese.com

CITY OF BEAUMONT
COLLIER'S FERRY PUMP STATION
PROCESS & INSTRUMENTATION
LEGEND I

F&N JOB NO.	BMT20326
DATE	01/07/2022
DESIGNED	DJD
DRAWN	JTR
REVISED	-
CHECKED	JNH
FILE NAME	PI-ALL-GN-LGND01.dwg

NO.	ISSUE	BY	DATE

VERIFY SCALE 0 1
Bar is one inch on original drawing. If not one inch on this sheet, adjust scale.

SHEET PI-1
SEQ. 10

SOLENOID OPERATED PUMP CONTROL VALVE
SOLENOID
KNIFE GATE
SLIDE GATE
GATE VALVE
GLOBE VALVE
BALL VALVE
PLUG VALVE
CHECK VALVE
DOUBLE CHECK VALVE
BUTTERFLY VALVE
NEEDLE VALVE
THREE-WAY VALVE
PINCH VALVE
MUD VALVE
SELF ACTUATING PRESSURE REGULATING VALVE
PRESSURE RELIEF VALVE
BACK PRESSURE VALVE
BACK PRESSURE/ANTI SIPHON VALVE
SPRING LOADED RELIEF VALVE
SOLENOID OPERATED VALVE
MOTOR OPERATED VALVE
MOTOR-ARROW DENOTES VARIABLE SPEED
MOTOR
ELECTROMAGNETIC FLOW METER
THERMAL MASS FLOW METER
VENTURI FLOW METER

PRESSURE GUAGE WITH DIAPHRAGM SEAL
THERMOMETER
PULSATION DAMPER ASSEMBLY
PRESSURE GAUGE
EXPANSION CHAMBER ASSEMBLY
PRESSURE SWITCH
UTILITY STATION
FIRE EXTINGUISHER
HOISTING HOOK
DRAIN
CALIBRATION CHAMBER
TEMPERATURE INDICATOR
PRESSURE DIFFERENTIAL INDICATOR
CHEMICAL FEED POINT
DIAPHRAGM SEAL
PRIMARY ELEMENT

METERING PUMP
CHOPPER
HOSE PUMP
CENTRIFUGAL PUMP CONSTANT SPEED
CENTRIFUGAL PUMP VARIABLE SPEED
BLOWER
SUBMERSIBLE PUMP
SUBMERSIBLE CHOPPER PUMP
SUMP PUMP
ROTARY LOBE PUMP
RECIPROCATING PUMP
VERTICAL TURBINE PUMP
PROGRESSING CAVITY PUMP
CENTRIFUGE
FINE BUBBLE DIFFUSERS

AIR RELEASE VALVE
COMBINATION AIR VALVE
HOSE BIB
Y-STRAINER
STRAINER
FLEXIBLE COUPLING
BLIND FLANGE
PIPE COUPLING
RESTRAINED EXPANSION JOINT
EXPANSION JOINT
EXPANSION JOINT
GAS FILTER
VENT
SCREEN
EJECTOR
PRIMARY ELEMENT
TELESCOPING VALVE
DAHL FLOW TUBE
MIXER
FLOATS

TREATMENT PROCESS LINE
FOUL AIR LINE
DRAIN LINE
QUICK CONNECTOR
REDUCER OR INCREASER
BLIND FLANGE, CAP, OR PLUG
UNION
HOSE BIBB
CLEAN OUT
WATER SURFACE ELEVATION
FIRE HYDRANT
LIGHTING STANDARD
MANHOLE
WATER STOP
FLOW ARROW
DIRECTION OF FLOW
TYPE
SONIC

ISSUED FOR BID

Freese and Nichols, Inc.
Texas Registered Engineering Firm F-2144
STATE OF TEXAS REBECCA SANDOVAL 102369 LICENSED PROFESSIONAL ENGINEER
01/26/2022
FREESE AND NICHOLS
10497 Town and Country Way, Suite 600
Houston, Texas 77024
Phone - (713) 600-6800
Web - www.freese.com

CITY OF BEAUMONT
COLLIER'S FERRY PUMP STATION
PROCESS & INSTRUMENTATION
LEGEND II

NO.	ISSUE	BY	DATE

F&N JOB NO. BMT20326
DATE 01/07/2022
DESIGNED DJD
DRAWN JTR
REVISED -
CHECKED JNH
FILE NAME PI-ALL-GN-LGND02.dwg

VERIFY SCALE 0 1
Bar is one inch on original drawing. If not one inch on this sheet, adjust scale.

SHEET PI-2
SEQ. 11

ACAD Rel: 24.0s (LMS Tech)
Filename: N:\PI\PI-ALL-GN-LGND02.dwg
Last Saved: 6/7/2021 9:09 PM Saved By: 04169

Plot Date: 1/26/2022 12:54 PM Plot By: 03644 Filename: N:\PI\PI-ALL-GN-LGND02.dwg

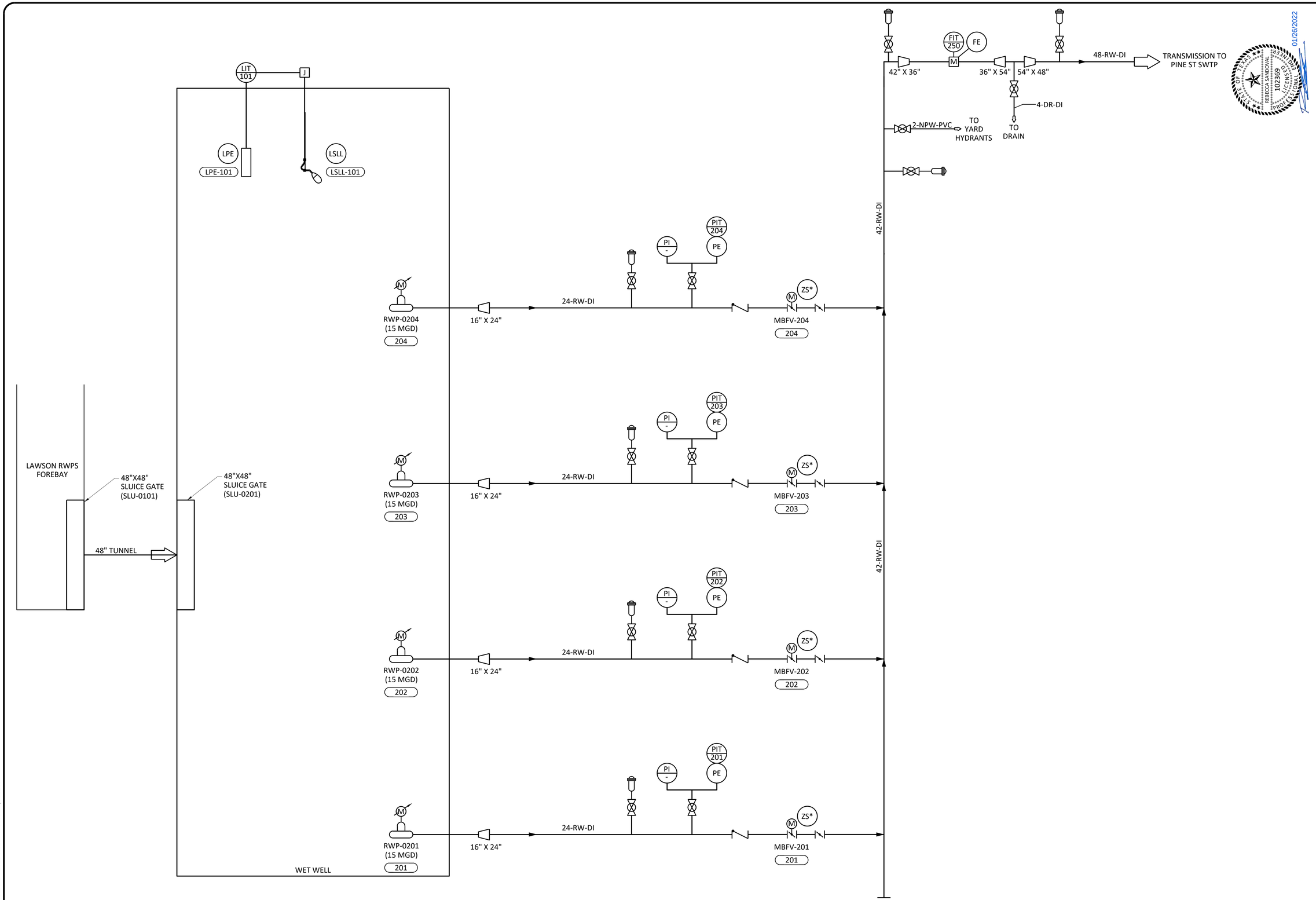

ISSUED FOR BID

Freese and Nichols, Inc.
Texas Registered Engineering Firm F-2144

STATE OF TEXAS
REBECCA SANDOVAL
102369
LICENSED
PROFESSIONAL ENGINEER
01/26/2022

STATE OF TEXAS
SOMNATH CHLUKURI
118309
LICENSED
PROFESSIONAL ENGINEER
01-19-2022

FREESE AND NICHOLS
10497 Town and Country Way,
Suite 600
Houston, Texas 77024
Phone - (713) 600-6800
Web - www.freese.com

CITY OF BEAUMONT
COLLIER'S FERRY PUMP STATION
PROCESS & INSTRUMENTATION
PROCESS DIAGRAM

P&N JOB NO.	BMT20326
DATE	01/07/2022
DESIGNED	LR
DRAWN	WFA
REVISED	
CHECKED	SC
FILE NAME	PI-COL-PS-P&ID.dwg

NO.	ISSUE	BY	DATE

VERIFY SCALE 0 1
Bar is one inch on original drawing. If not one inch on this sheet, adjust scale.

SHEET PI-3
SEQ. .

ACAD Rel: 24.0s (LMS Tech)
Filename: N:\PI\PI-COL-PS-P&ID.dwg
Last Saved: 1/14/2022 9:01 AM Saved By: 02139

Plot Date: 1/14/2022 3:28 PM Plot By: 02139 Filename: N:\PI\PI-COL-PS-P&ID.dwg

TAG #	DESCRIPTION	RANGE	SIGNAL
PIT-201	RWP-0201 PRESSURE	0-150 PSI	4-20mA
PIT-202	RWP-0202 PRESSURE	0-150 PSI	4-20mA
PIT-203	RWP-0203 PRESSURE	0-150 PSI	4-20mA
PIT-204	RWP-0204 PRESSURE	0-150 PSI	4-20mA

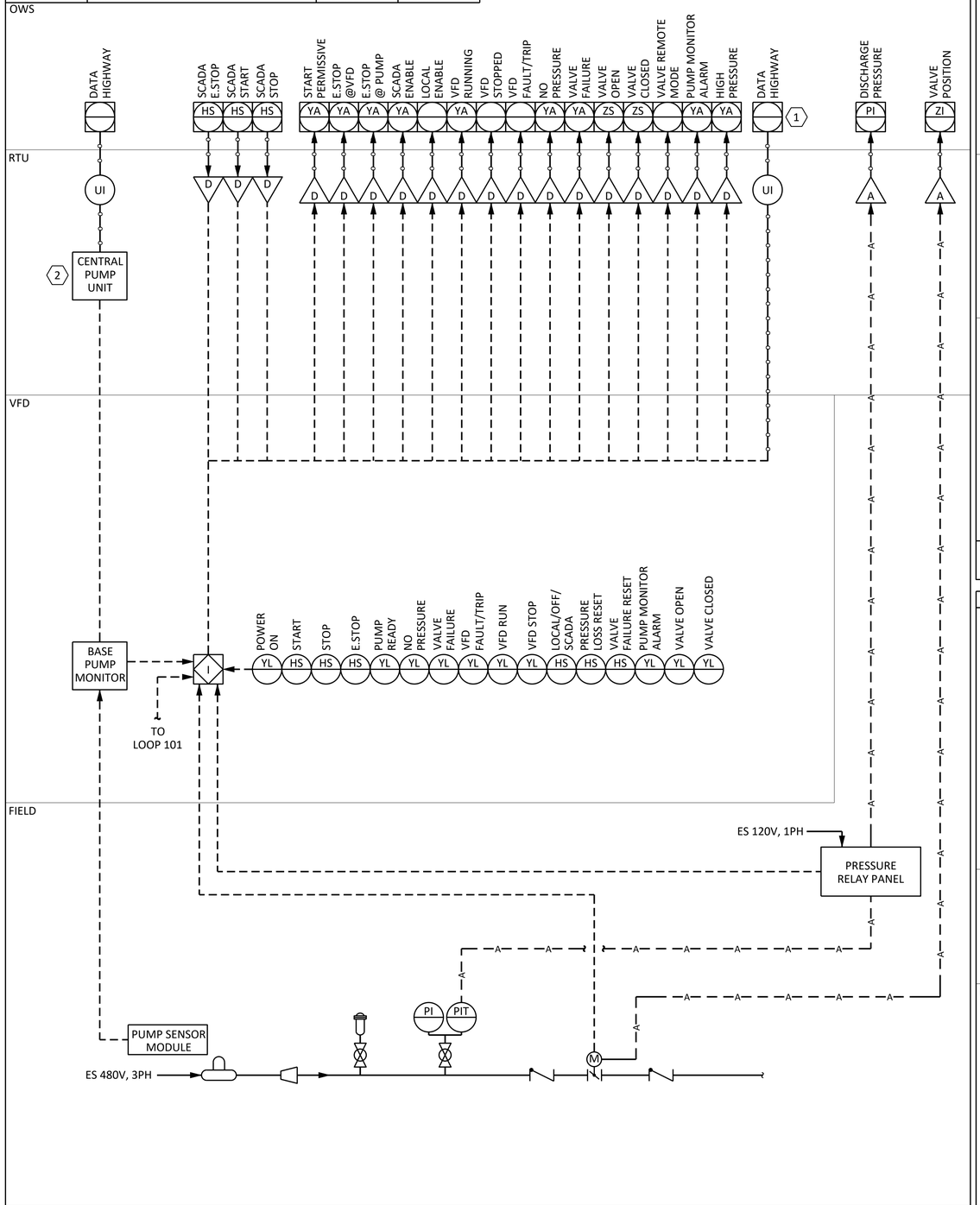

RAW WATER PUMPS — LOOP : 201, 202, 203, 204

TAG #	DESCRIPTION	RANGE	SIGNAL
LPE-101	SUBMERSIBLE LEVEL TRANSDUCER	0-40 FT.	4-20mA
LSLL-101	LOW LEVEL LOCKOUT FLOAT SWITCH	SET @ 6' AFF	DISCRETE

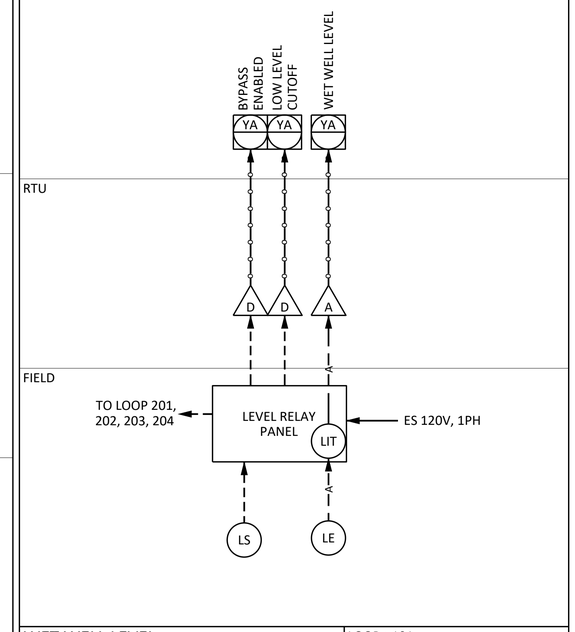

WET WELL LEVEL — LOOP : 101

NOTES BY SYMBOL "⬡"

1. THE PUMP SPEED SETPOINT AND SPEED FEEDBACK SHALL BE SENT/RECEIVED THROUGH THE DATA HIGHWAY CONNECTION.
2. A SINGLE CENTRAL PUMP UNIT SHALL BE PROVIDED BY THE PUMP MANUFACTURER AND HOUSED IN THE RTU CABINET. EACH VFD SHALL HAVE A BASE PUMP MONITOR CONNECTED TO THE CENTRAL PUMP UNIT.

TAG #	DESCRIPTION	RANGE	SIGNAL

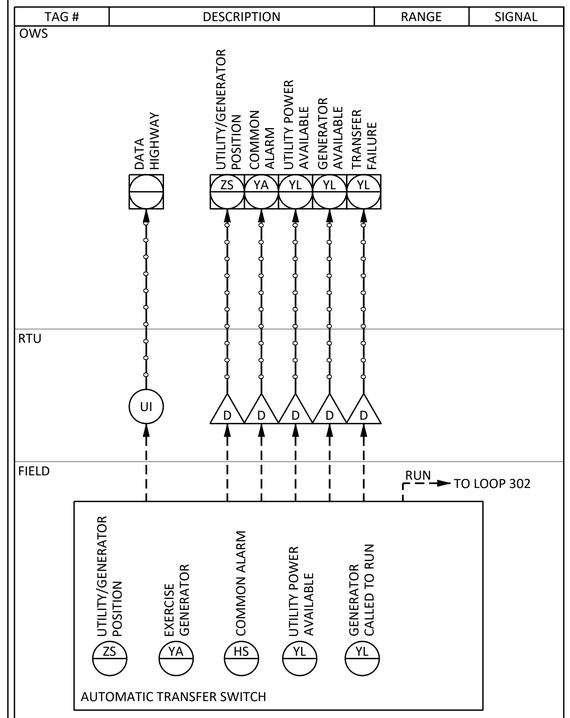

AUTOMATIC TRANSFER SWITCH "ATS-1" — LOOP : 301

TAG #	DESCRIPTION	RANGE	SIGNAL

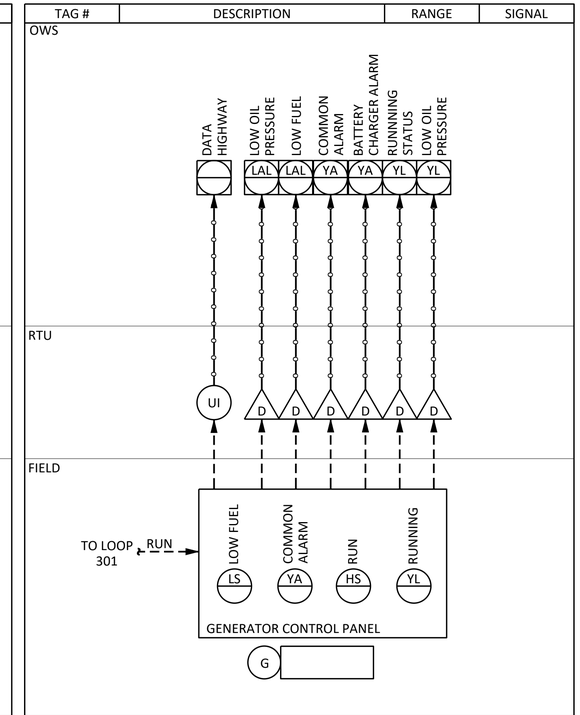

1250KW GENERATOR — LOOP : 302

ISSUED FOR BID

Freese and Nichols, Inc.
Texas Registered Engineering Firm F-2144

STATE OF TEXAS — REBECCA SANDOVAL — 102369 — LICENSED PROFESSIONAL ENGINEER — 01/26/2022

FREESE AND NICHOLS
10497 Town and Country Way, Suite 600
Houston, Texas 77024
Phone - (713) 600-6800
Web - www.freese.com

CITY OF BEAUMONT
COLLIER'S FERRY PUMP STATION
PROCESS & INSTRUMENTATION
LOOP DIAGRAMS I

NO.	ISSUE	BY	DATE

F&N JOB NO. BMT20326
DATE 01/07/2022
DESIGNED DJD
DRAWN JTR
REVISED -
CHECKED JNH
FILE NAME PI-ALL-DG-LOOP01.dwg

VERIFY SCALE 0 1 — Bar is one inch on original drawing. If not one inch on this sheet, adjust scale.

SHEET PI-4
SEQ. 13

ACAD Rel: 24.0s (LMS Tech)
Filename: N:\PI\PI-ALL-DG-LOOP01.dwg
Last Saved: 1/25/2022 8:28 PM Saved By: 03644

Plot Date: 1/26/2022 12:54 PM Plot By: 03644 Filename: N:\PI\PI-ALL-DG-LOOP01.dwg

TAG #	DESCRIPTION	RANGE	SIGNAL
XS-311	ELECTRICAL BUILDING DOUBLE-DOORS	OPEN/CLOSE	DISCRETE
XS-312	ELECTRICAL BUILDING SINGLE DOOR	OPEN/CLOSE	DISCRETE

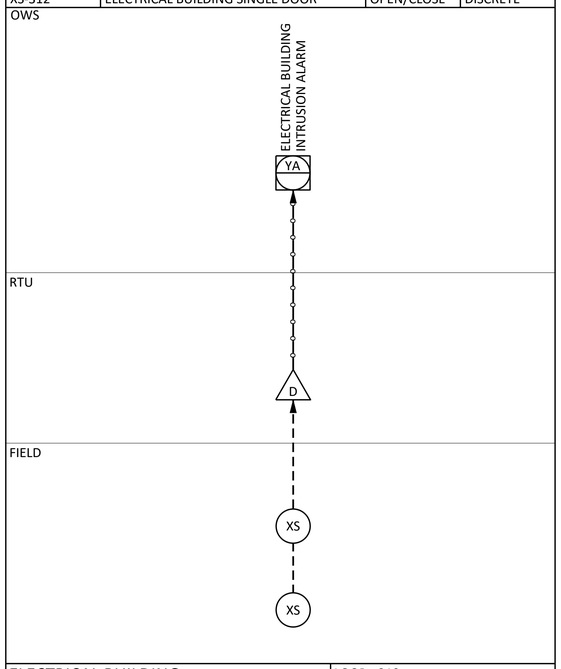

ELECTRICAL BUILDING INTRUSION ALARM — LOOP : 310

TAG #	DESCRIPTION	RANGE	SIGNAL

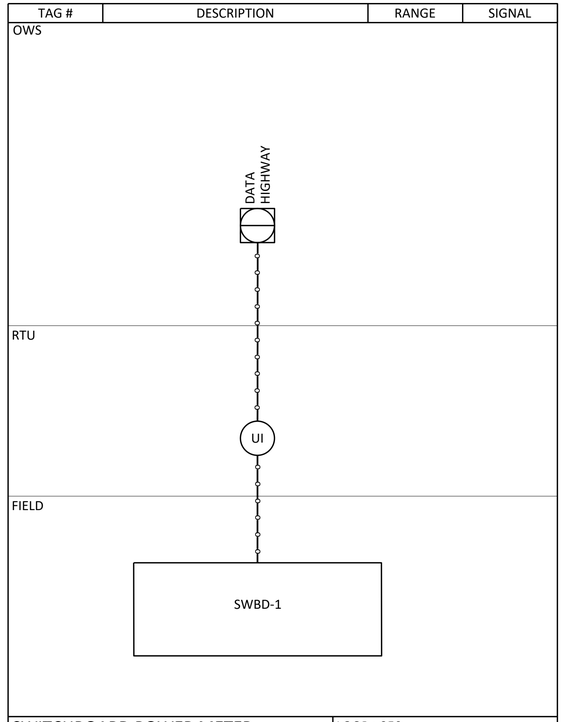

SWITCHBOARD POWER METER — LOOP : 350

TAG #	DESCRIPTION	RANGE	SIGNAL

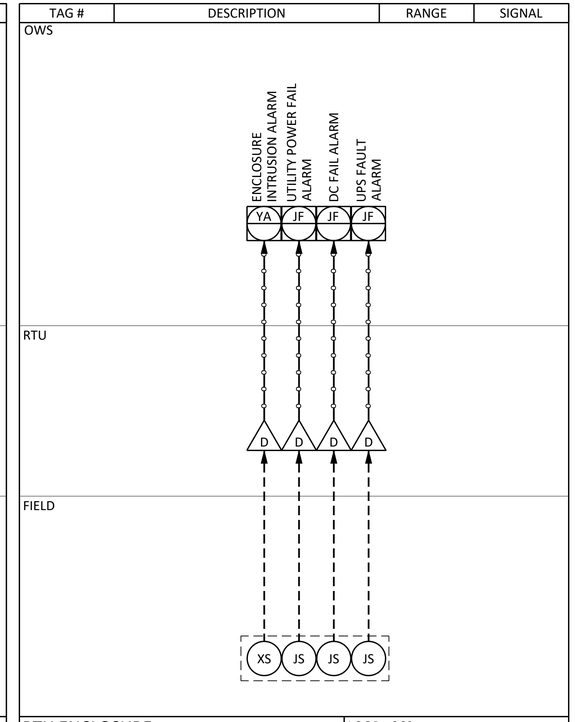

RTU ENCLOSURE — LOOP : 360

TAG #	DESCRIPTION	RANGE	SIGNAL
FE/FIT-250	DISCHARGE FLOW METER	0-35,000 GPM	4-20mA

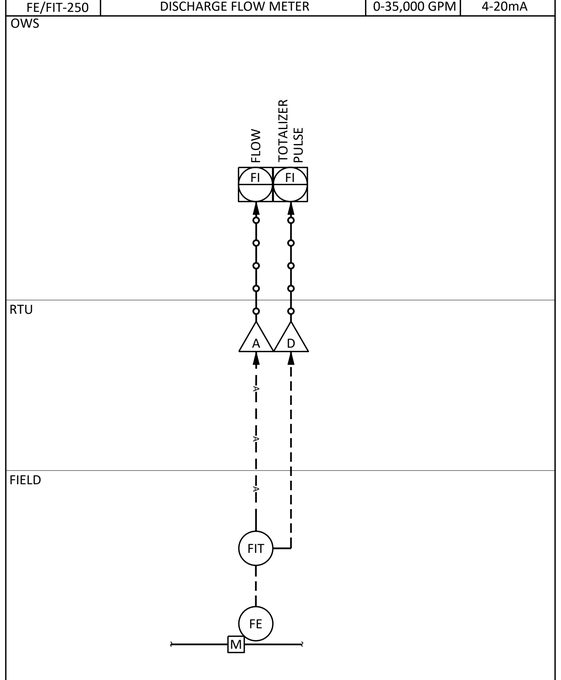

FLOW METER — LOOP : 250

ISSUED FOR BID

Freese and Nichols, Inc.
Texas Registered Engineering Firm F-2144

STATE OF TEXAS
REBECCA SANDOVAL
102369
LICENSED
PROFESSIONAL ENGINEER
01/26/2022

FREESE AND NICHOLS
10497 Town and Country Way,
Suite 600
Houston, Texas 77024
Phone - (713) 600-6800
Web - www.freese.com

CITY OF BEAUMONT
COLLIER'S FERRY PUMP STATION
PROCESS & INSTRUMENTATION
LOOP DIAGRAMS II

F&N JOB NO.	BMT20326
DATE	01/07/2022
DESIGNED	DJD
DRAWN	JTR
REVISED	-
CHECKED	JNH
FILE NAME	PI-ALL-DG-LOOP02.dwg

NO.	ISSUE	BY	DATE

VERIFY SCALE 0 1
Bar is one inch on original drawing. If not one inch on this sheet, adjust scale.

SHEET PI-5
SEQ. 14

ACAD Rel: 24.0s (LMS Tech)
Filename: N:\PI\PI-ALL-DG-LOOP02.dwg
Last Saved: 11/10/2021 8:41 PM Saved By: 03644

Plot Date: 1/26/2022 12:54 PM Plot By: 03644 Filename: N:\PI\PI-ALL-DG-LOOP02.dwg

CONTROL POINTS			
DESCRIPTION	NORTHING	EASTING	ELEVATION
T.B.M. #1 - MAG NAIL	13991951.92	3518801.06	4.95
T.B.M. #2 - MAG NAIL	13991885.96	3517692.19	22.92

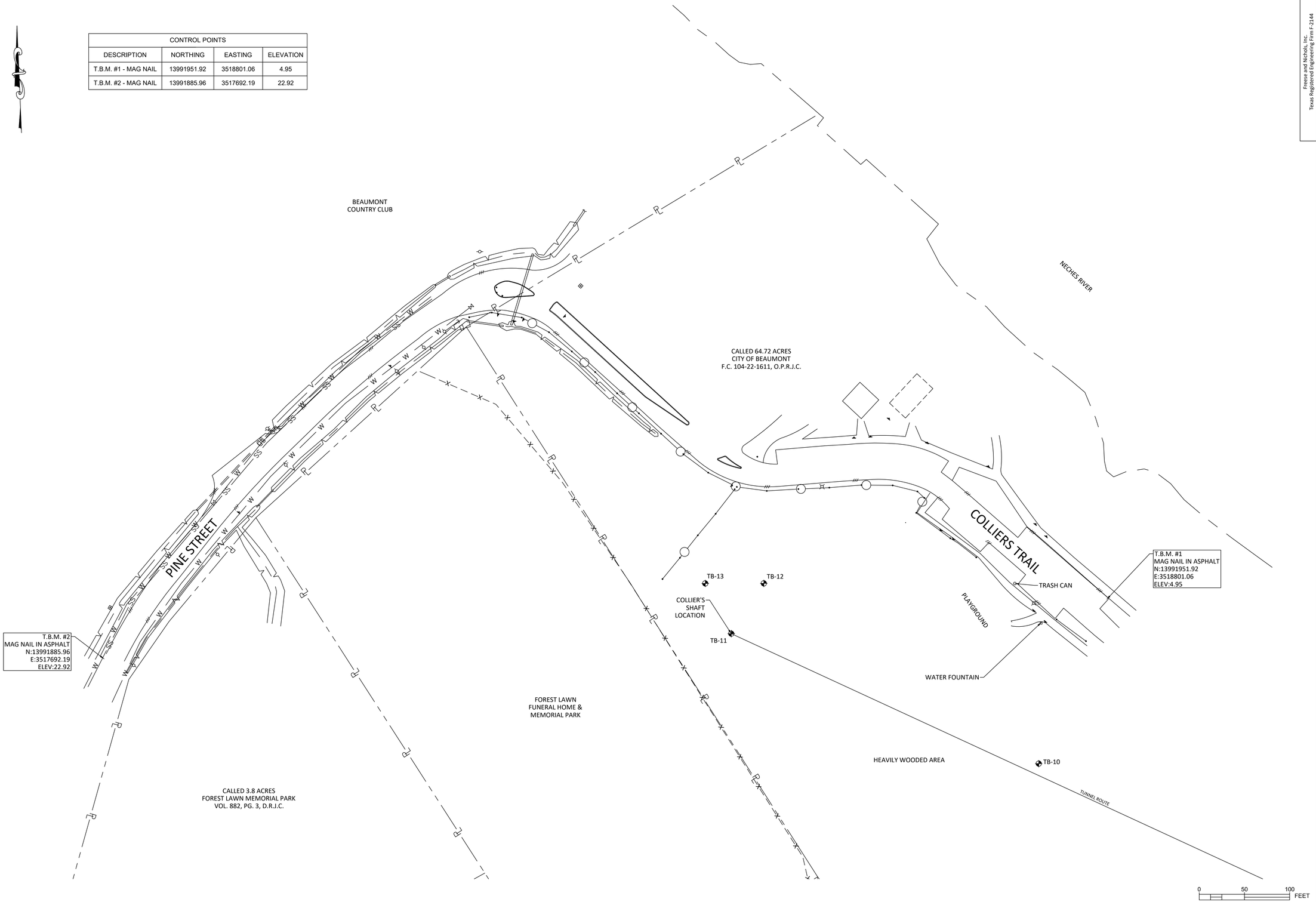

ISSUED FOR BID

Freese and Nichols, Inc.
Texas Registered Engineering Firm F-2144

STATE OF TEXAS
REGISTERED
ANTHONY R. LEGER
5481
PROFESSIONAL
LAND SURVEYOR

FREESE AND NICHOLS

10497 Town and Country Way,
Suite 600
Houston, Texas 77024
Phone - (713) 600-6800
Web - www.freese.com

CITY OF BEAUMONT

COLLIERS RAW WATER PUMP STATION

HORIZONTAL AND VERTICAL CONTROL

NO.	ISSUE	BY	DATE

F&N JOB NO. BMT20326
DATE JUKY 2021
DESIGNED ####
DRAWN TC
REVISED ####
CHECKED ####
FILE NAME 21-0017-SURFACE.dwg

VERIFY SCALE 0 1
Bar is one inch on original drawing. If not one inch on this sheet, adjust scale.

SHEET C-1
SEQ. 15

ACAD Rel: 24.0s (LMS Tech)
Filename: \\SOUTEX\SoutexServer\Data\1 SoutexProjects\2021\21-0017 Freese & Nichols-BMT Water Treatment Plant\DWG\CLIENT\21-0017-SURFACE.dwg
Last Saved: 7/6/2021 2:25 PM Saved By: Travis PC

Plot Date: 7/6/2021 2:25 PM Plot By: Travis PC Filename: \\SOUTEX\SoutexServer\Data\1 SoutexProjects\2021\21-0017 Freese & Nichols-BMT Water Treatment Plant\DWG\CLIENT\21-0017-SURFACE.dwg

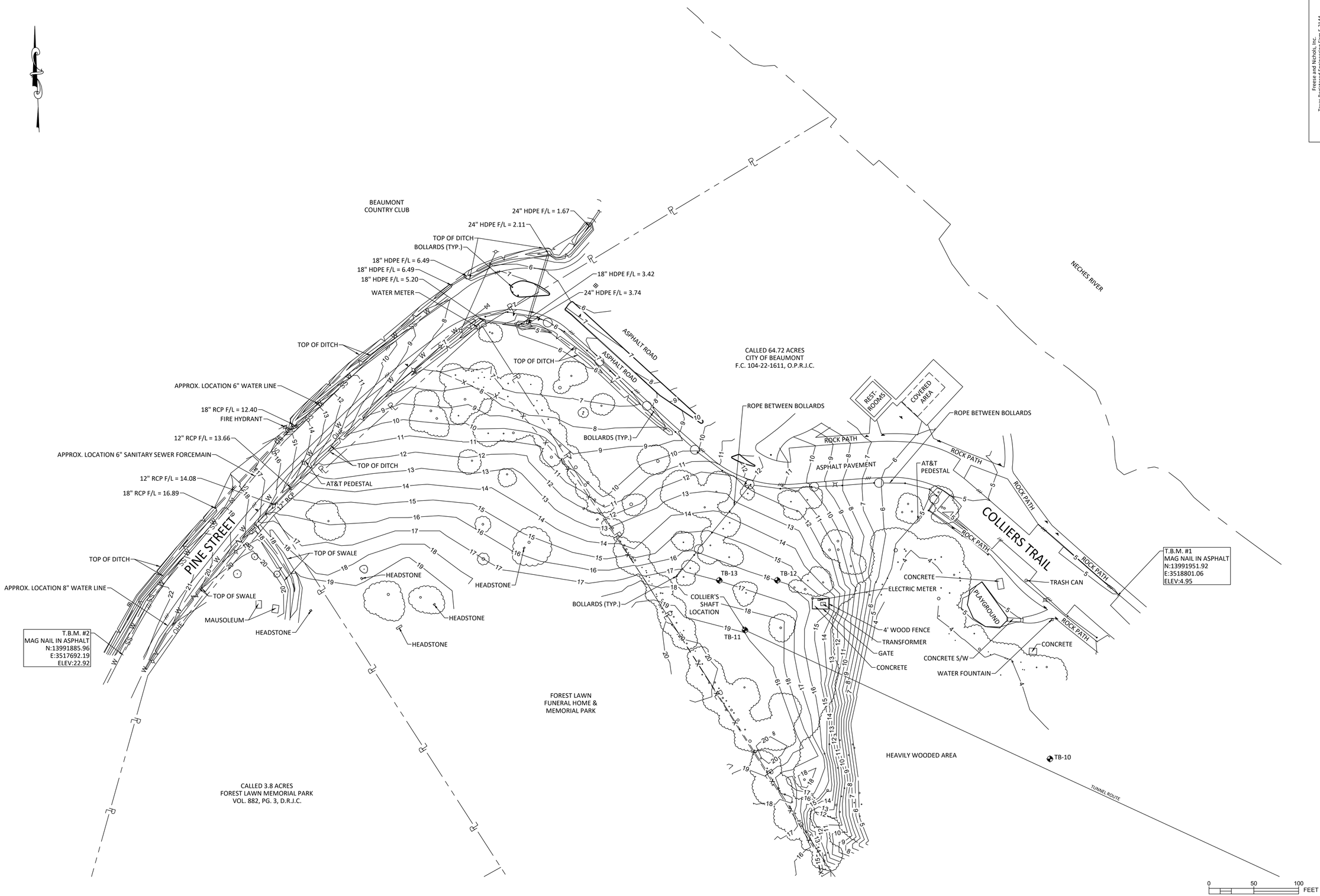

ISSUED FOR BID

Freese and Nichols, Inc.
Texas Registered Engineering Firm F-2144

STATE OF TEXAS REGISTERED
ANTHONY R. LEGER
5481
Professional
LAND SURVEYOR

FREESE AND NICHOLS

10497 Town and Country Way,
Suite 600
Houston, Texas 77024
Phone - (713) 600-6800
Web - www.freese.com

CITY OF BEAUMONT

COLLIERS RAW WATER PUMP STATION

BOUNDARY AND TOPOGRAPHIC SURVEY
SHEET 1 OF 2

NO.	ISSUE	BY	DATE

F&N JOB NO. BMT20326
DATE JULY 2021
DESIGNED ####
DRAWN TC
REVISED ####
CHECKED ####
FILE NAME 21-0017-SURFACE.dwg

VERIFY SCALE Bar is one inch on original drawing. If not one inch on this sheet, adjust scale.
0 1

SHEET C-2
SEQ. 16

ACAD Rel: 24.0s (LMS Tech)
Filename: \\SOUTEX\SoutexServer\Data\1 SoutexProjects\2021\21-0017 Freese & Nichols-BMT Water Treatment Plant\DWG\CLIENT\21-0017-SURFACE.dwg
Last Saved: 7/6/2021 2:25 PM Saved By: Travis PC

Plot Date: 7/6/2021 2:25 PM Plot By: Travis PC Filename: \\SOUTEX\SoutexServer\Data\1 SoutexProjects\2021\21-0017 Freese & Nichols-BMT Water Treatment Plant\DWG\CLIENT\21-0017-SURFACE.dwg

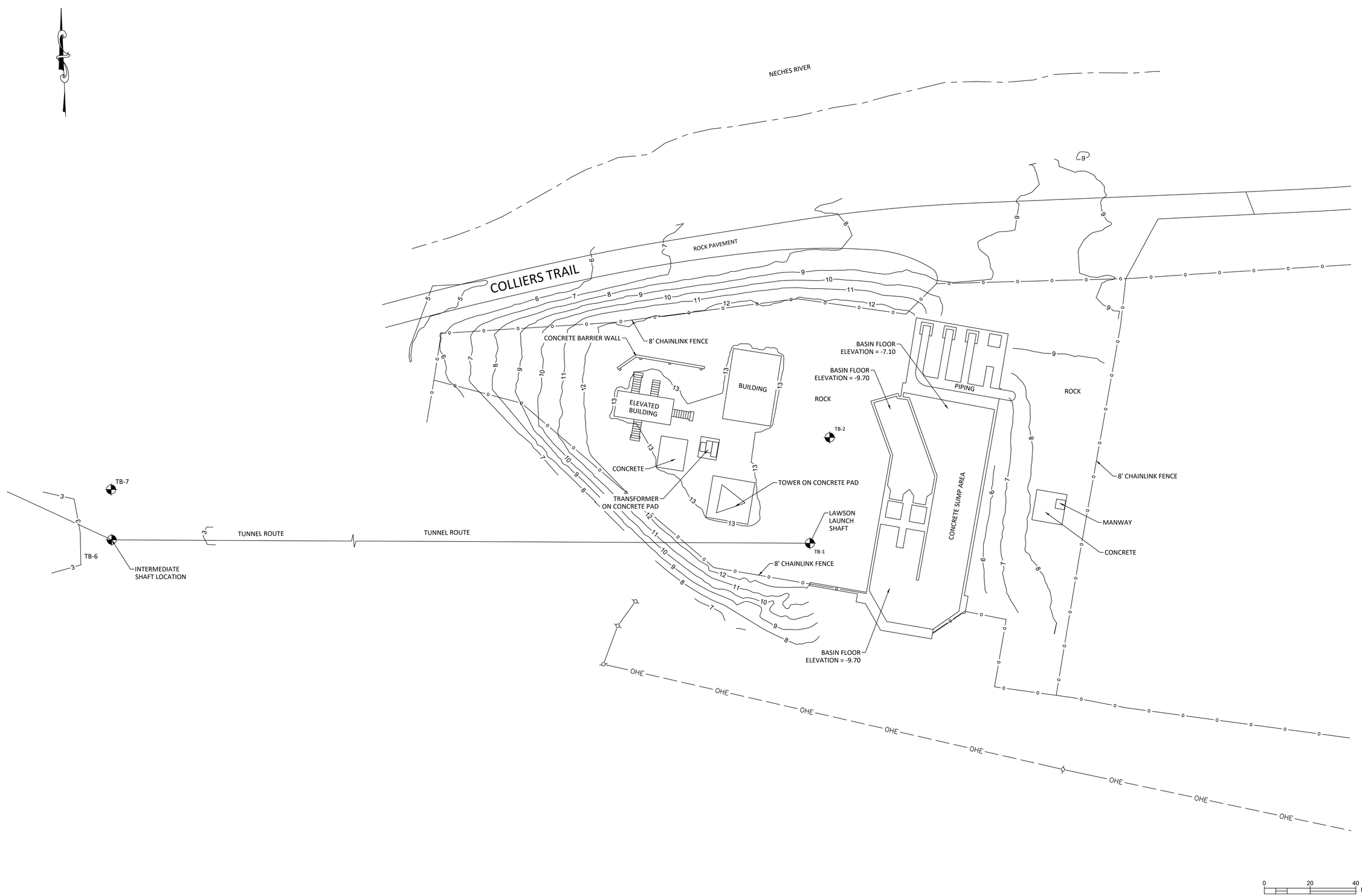

ISSUED FOR BID

Freese and Nichols, Inc.
Texas Registered Engineering Firm F-2144

STATE OF TEXAS REGISTERED ANTHONY R. LEGER 5481 PROFESSIONAL LAND SURVEYOR

FREESE AND NICHOLS
10497 Town and Country Way,
Suite 600
Houston, Texas 77024
Phone - (713) 600-6800
Web - www.freese.com

CITY OF BEAUMONT

COLLIERS RAW WATER PUMP STATION

BOUNDARY AND TOPOGRAPHIC SURVEY
SHEET 2 OF 2

NO.	ISSUE	BY	DATE

F&N JOB NO. BMT20326
DATE JULY 2021
DESIGNED ####
DRAWN TC
REVISED ####
CHECKED ####
FILE NAME 21-0017-SURFACE.dwg

VERIFY SCALE 0 1
Bar is one inch on original drawing. If not one inch on this sheet, adjust scale.

SHEET C-3
SEQ. 17

ACAD Rel: 24.0s (LMS Tech)
Filename: \\SOUTEX\SoutexServer\Data\1 SoutexProjects\2021\21-0017 Freese & Nichols-BMT Water Treatment Plant\DWG\CLIENT\21-0017-SURFACE.dwg
Last Saved: 7/6/2021 2:25 PM Saved By: Travis PC

Plot Date: 7/6/2021 2:25 PM Plot By: Travis PC Filename: \\SOUTEX\SoutexServer\Data\1 SoutexProjects\2021\21-0017 Freese & Nichols-BMT Water Treatment Plant\DWG\CLIENT\21-0017-SURFACE.dwg

LEGEND:

WETLAND AREA

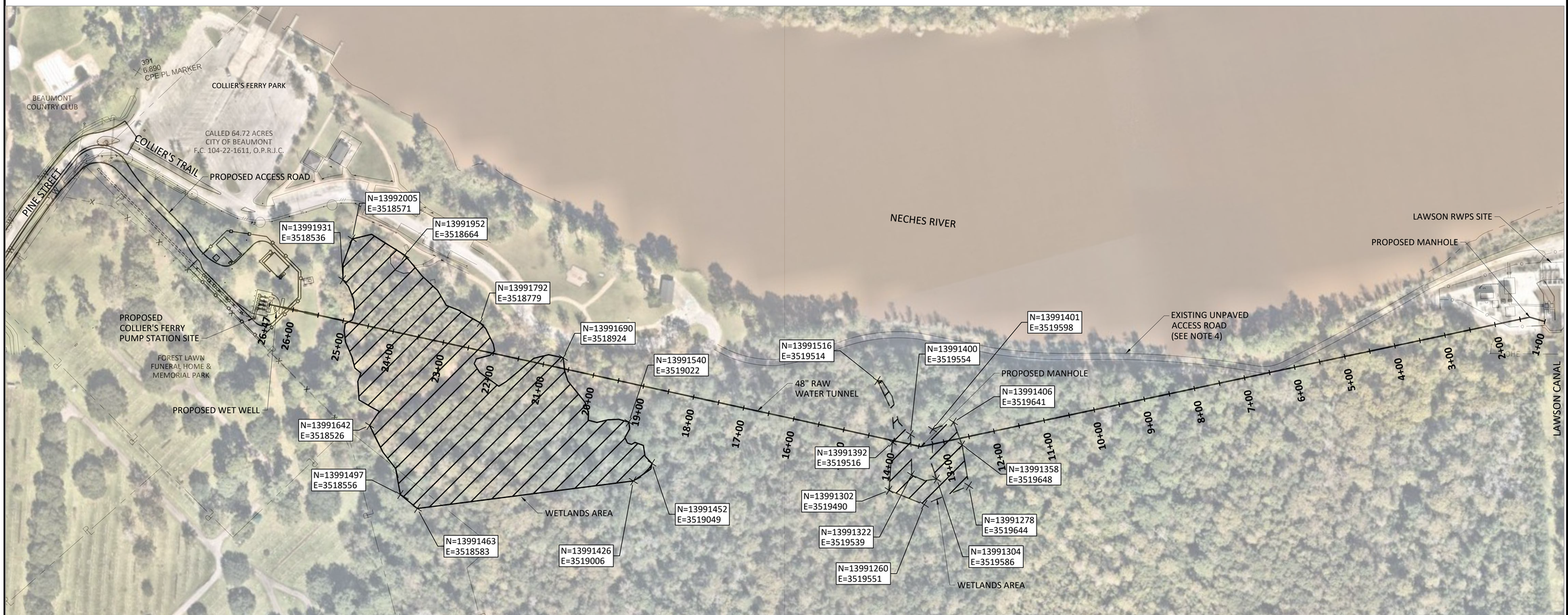

NOTES:

1. AERIAL IMAGERY SHOWN WAS OBTAINED FROM NEARMAP AND DATED 10 2020.
2. THE CONTRACTOR'S STAGING , PARKING AND STORAGE AREAS SHALL BE LIMITED TO THE AREAS DESIGNATED ON THE DRAWINGS FOR THE CONTRACTOR'S USE. IF ADDITIONAL AREA(S) ARE REQUIRED, THE CONTRACTOR SHALL BE RESPONSIBLE FOR OBTAINING SUCH AREAS WITH OWNER'S APPROVAL.
3. COLLIERS FERRY PARK SHALL NOT BE USED FOR CONSTRUCTION STAGING OR PARKING.
4. CONTRACTOR SHALL COORDINATE WORK AND SITE ACCESS WITH THE CITY. CONTRACTOR SHALL MAINTAIN ACCESS TO THE EXISTING LAWSON PUMP STATION AND TO PRIVATE PROPERTY OWNER TO THE EAST OF THE EXISTING PUMP STATION AT ALL TIMES. CONTRACTOR SHALL KEEP THE EXISTING ACCESS GATES TO THE ACCESS ROAD AND LAWSON PUMP STATION LOCKED AND SHALL MAINTAIN EXISTING PERIMETER FENCING AT THE EXISTING PUMP STATION AT ALL TIMES.
5. THIS AREA IS SUBJECT TO FLOODING. FLOOD PROTECTION OF THE SITE, INCLUDING AREAS DESIGNED FOR THE CONTRACTOR'S USE SHALL BE THE RESPONSIBILITY OF THE CONTRACTOR.
6. CONTRACTOR SHALL NOT ENTER OR DISTURB WETLAND AREAS DELINEATED ON THE DRAWINGS.

0 100' 200'
SCALE IN FEET

ISSUED FOR BID

Freese and Nichols, Inc.
Texas Registered Engineering Firm F-2144

STATE OF TEXAS
SOMNATH CHILUKURI
118309
LICENSED
PROFESSIONAL ENGINEER
01-19-2022

FREESE AND NICHOLS
10497 Town and Country Way,
Suite 600
Houston, Texas 77024
Phone - (713) 600-6800
Web - www.freese.com

CITY OF BEAUMONT
COLLIER'S FERRY PUMP STATION
CIVIL
OVERALL SITE PLAN

NO.	ISSUE	BY	DATE

F&N JOB NO. BMT20326
DATE 01/07/2022
DESIGNED LVR
DRAWN WFA
REVISED
CHECKED ACH
FILE NAME CV-OVRAL-PS-SITE-PL.dwg

VERIFY SCALE 0 1
Bar is one inch on original drawing. If not one inch on this sheet, adjust scale.

SHEET C-4
SEQ. 18

ACAD Rel: 24.0s (LMS Tech)
Filename: N:\WW\Drawings\CV-OVRAL-PS-SITE-PL.dwg
Last Saved: 11/29/2021 11:41 AM Saved By: 02139

Plot Date: 1/13/2022 2:27 PM Plot By: 02139 Filename: N:\WW\Drawings\CV-OVRAL-PS-SITE-PL.dwg

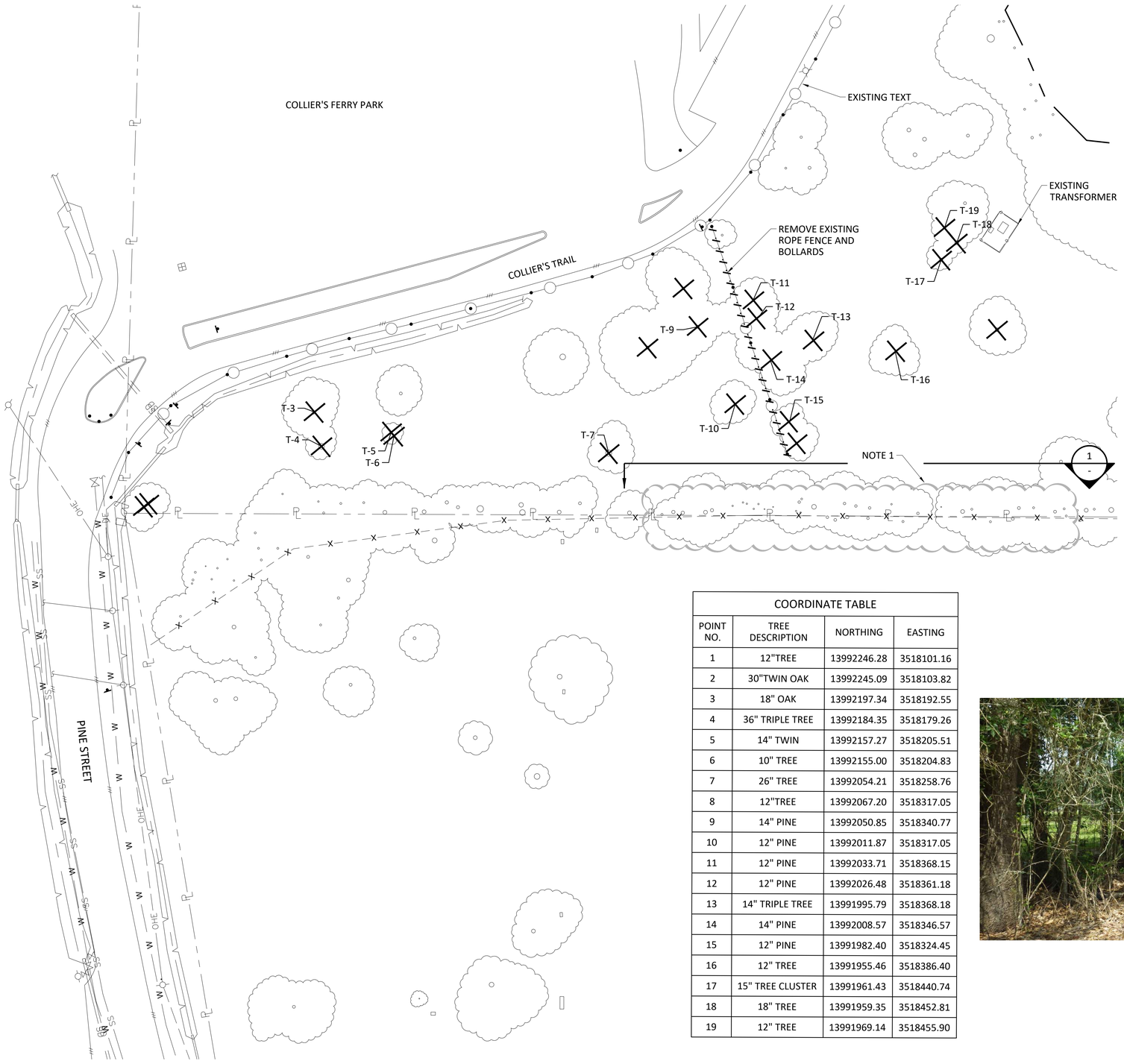

LEGEND

- REMOVE TREE
- REMOVE ITEM
- EXISTING TREE

NOTE:

1. CLEAR BRUSH IN THIS CLOUDED AREA AS REQUIRED TO INSTALL THE PIPING, FLOW METER SLAB, AND FENCE.

COORDINATE TABLE			
POINT NO.	TREE DESCRIPTION	NORTHING	EASTING
1	12"TREE	13992246.28	3518101.16
2	30"TWIN OAK	13992245.09	3518103.82
3	18" OAK	13992197.34	3518192.55
4	36" TRIPLE TREE	13992184.35	3518179.26
5	14" TWIN	13992157.27	3518205.51
6	10" TREE	13992155.00	3518204.83
7	26" TREE	13992054.21	3518258.76
8	12"TREE	13992067.20	3518317.05
9	14" PINE	13992050.85	3518340.77
10	12" PINE	13992011.87	3518317.05
11	12" PINE	13992033.71	3518368.15
12	12" PINE	13992026.48	3518361.18
13	14" TRIPLE TREE	13991995.79	3518368.18
14	14" PINE	13992008.57	3518346.57
15	12" PINE	13991982.40	3518324.45
16	12" TREE	13991955.46	3518386.40
17	15" TREE CLUSTER	13991961.43	3518440.74
18	18" TREE	13991959.35	3518452.81
19	12" TREE	13991969.14	3518455.90

1 SITE PHOTO
NTS

0 10' 20' 30' 60'
SCALE IN FEET

ISSUED FOR BID

Freese and Nichols, Inc.
Texas Registered Engineering Firm F-2144

STATE OF TEXAS
SOMNATH CHILUKURI
118309
LICENSED
PROFESSIONAL ENGINEER
01-19-2022

FREESE AND NICHOLS
10497 Town and Country Way,
Suite 600
Houston, Texas 77024
Phone - (713) 600-6800
Web - www.freese.com

CITY OF BEAUMONT
COLLIER'S FERRY PUMP STATION

CIVIL
COLLIER'S FERRY PUMP STATION
SITE DEMO PLAN

F&N JOB NO. BMT20326
DATE 01/07/2022
DESIGNED LVR
DRAWN WFA
REVISED
CHECKED ACH
FILE NAME CV-PS-DEMO-PL.dwg

NO.	ISSUE	BY	DATE

VERIFY SCALE 0 1
Bar is one inch on original drawing. If not one inch on this sheet, adjust scale.

SHEET C-5
SEQ. 19

ACAD Rel: 24.0s (LMS Tech)
Filename: N:\WW\Drawings\CV-PS-DEMO-PL.dwg
Last Saved: 12/21/2021 11:55 AM Saved By: 04295

Plot Date: 1/13/2022 2:28 PM Plot By: 02139 Filename: N:\WW\Drawings\CV-PS-DEMO-PL.dwg

LEGEND

WORK LIMIT

NOTES:

1. EXISTING UNDERGROUND ELECTRICAL SERVICES CONTRACTOR TO FIELD VERIFY EXACT ROUTING AND MAINTAIN SERVICES TO EXISTING LOADS COORDINATE REQUIREMENTS WITH ENTERGY

0 50' 100'
SCALE IN FEET

ISSUED FOR BID

Freese and Nichols, Inc.
Texas Registered Engineering Firm F-2144

STATE OF TEXAS
KENNETH CHAUNCEY SCHNEIDER
118309
LICENSED
PROFESSIONAL ENGINEER
01-19-2022

FREESE AND NICHOLS
10497 Town and Country Way,
Suite 600
Houston, Texas 77024
Phone - (713) 600-6800
Web - www.freese.com

CITY OF BEAUMONT
COLLIER'S FERRY PUMP STATION

CIVIL
COLLIER'S FERRY PUMP STATION
SITE AND EXISTING GRADING PLAN

NO.	ISSUE	BY	DATE

F&N JOB NO. BMT20326
DATE 01/07/2022
DESIGNED LVR
DRAWN WFA
REVISED
CHECKED ACH
FILE NAME CV-PS-ENLG-PL.dwg

VERIFY SCALE Bar is one inch on original drawing. If not one inch on this sheet, adjust scale.
0 1

SHEET C-6
SEQ. 20

ACAD Rel: 24.0s (LMS Tech)
Filename: N:\WW\Drawings\CV-PS-ENLG-PL.dwg
Last Saved: 1/14/2022 8:18 AM Saved By: 02139

Plot Date: 1/14/2022 2:19 PM Plot By: 02139 Filename: N:\WW\Drawings\CV-PS-ENLG-PL.dwg

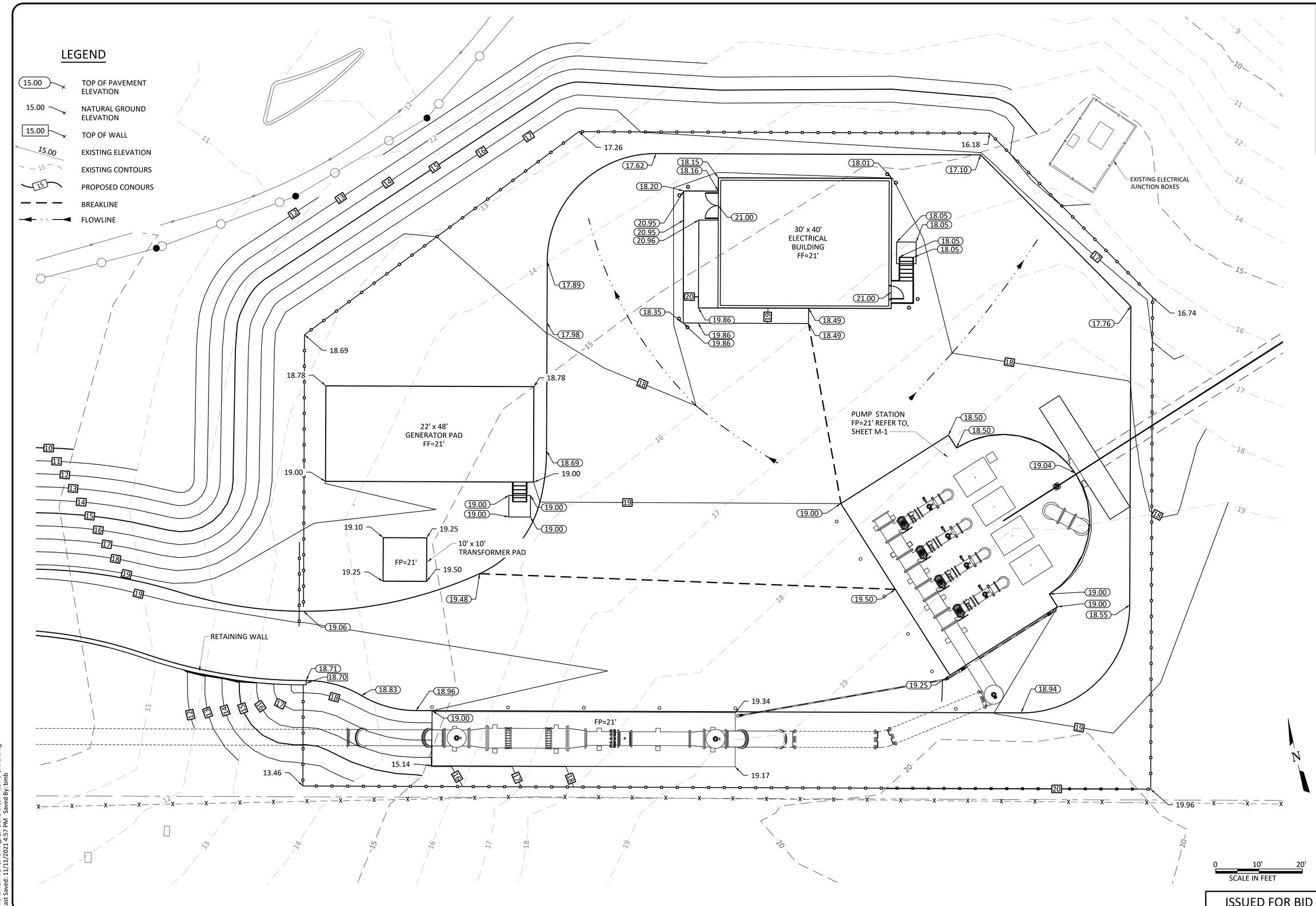

ISSUED FOR BID

Freese and Nichols, Inc.
Texas Registered Engineering Firm F-2144

STATE OF TEXAS
SOMNATH CHILUKURI
118309
LICENSED PROFESSIONAL ENGINEER
01-19-2022

FREESE AND NICHOLS
10497 Town and Country Way,
Suite 600
Houston, Texas 77024
Phone - (713) 600-6800
Web - www.freese.com

CITY OF BEAUMONT
COLLIER'S FERRY PUMP STATION

CIVIL
COLLIER'S FERRY PUMP STATION
GRADING PLAN

F&N JOB NO.	BMT20326
DATE	01/07/2022
DESIGNED	IDW
DRAWN	
REVISED	
CHECKED	BMB
FILE NAME	CV-ALL-PL-GRAD.dwg

NO.	ISSUE	BY	DATE

VERIFY SCALE Bar is one inch on original drawing. If not one inch on this sheet, adjust scale.
0 1

SHEET C-7
SEQ. 21

ACAD Rel: 23.1s (LMS Tech)
Filename: N:\IF\Drawings\1. General\CV-ALL-PL-GRAD.dwg
Last Saved: 11/11/2021 4:57 PM Saved By: bmb

Plot Date: 1/13/2022 11:52 AM Plot By: bmb Filename: N:\IF\Drawings\1. General\CV-ALL-PL-GRAD.dwg

COORDINATE TABLE			
POINT NO.	NORTHING	EASTING	POINT DESCRIPTION
1	13992016.63	3518246.76	FENCE
2	13992072.74	3518334.55	FENCE
3	13992044.87	3518408.26	FENCE
4	13991964.90	3518459.36	FENCE
5	13991912.76	3518447.88	FENCE
6	13991851.62	3518352.20	FENCE
7	13992038.89	3518281.59	FENCE
8	13992011.18	3518342.21	GRAVEL
9	13992034.76	3518379.12	GRAVEL
10	13992027.15	3518413.65	GRAVEL
11	13991963.96	3518454.03	GRAVEL
12	13991915.86	3518443.44	GRAVEL
13	13991878.72	3518385.32	GRAVEL
14	13991890.39	3518348.19	GRAVEL
15	13992029.20	3518266.42	FENCE
16	13991895.66	3518377.41	CONCRETE CONER SLAB CONER
17	13991892.48	3518375.94	CONCRETE CONER SLAB CONER
18	13991904.84	3518349.16	CONCRETE CONER SLAB CONER
19	13991947.52	3518368.85	CONCRETE CONER SLAB CONER
20	13991935.16	3518395.64	CONCRETE CONER SLAB CONER
21	13991931.98	3518394.17	CONCRETE CONER SLAB CONER
22	13991978.28	3518438.30	BUILDING CONER
23	13991969.35	3518426.60	STAIR CORNER
24	13991965.56	3518429.03	STAIR CORNER
25	13991961.25	3518421.20	LANDING CONER
26	13991958.43	3518416.79	LANDING CONER
27	13991962.13	3518413.02	BUILDING CONER
28	13991978.16	3518402.72	LANDING CONER
29	13991976.28	3518399.78	LANDING CONER
30	13991980.00	3518397.40	RAMP CONER
31	13992000.67	3518384.19	RAMP CONER
32	13991999.60	3518389.03	RAMP CONER
33	13991995.67	3518392.23	BUILDING CONER
34	13992010.53	3518406.13	LANDING CONER
35	13992017.07	3518409.86	LANDING CONER
36	13992010.33	3518414.16	LANDING CONER
37	13992011.99	3518416.76	BUILDING CONER
38	13992021.71	3518353.13	CONCRETE SLAB CONER
39	13992009.87	3518334.59	CONCRETE SLAB CONER
40	13992050.32	3518308.75	CONCRETE SLAB CONER
41	13992062.16	3518327.29	CONCRETE SLAB CONER
42	13992023.61	3518310.39	CONCRETE SLAB CONER
43	13992018.23	3518301.96	CONCRETE SLAB CONER
44	13992026.65	3518296.57	CONCRETE SLAB CONER
45	13992032.04	3518305.00	CONCRETE SLAB CONER
46	13992000.82	3518277.39	CONCRETE SLAB CONER
47	13991941.83	3518315.09	GRAVEL
48	13991935.10	3518304.55	GRAVEL
49	13991994.09	3518266.86	GRAVEL
50	13991913.82	3518385.79	GRAVEL
51	13991893.90	3518350.90	90-DEG BEND
52	13991908.35	3518330.20	45-DEG BEND

COORDINATE TABLE			
POINT NO.	NORTHING	EASTING	POINT DESCRIPTION
53	13991926.94	3518317.38	45-DEG BEND
54	13991940.36	3518308.80	45-DEG BEND
55	13991995.15	3518273.79	45-DEG BEND
56	13992008.35	3518265.36	45-DEG BEND

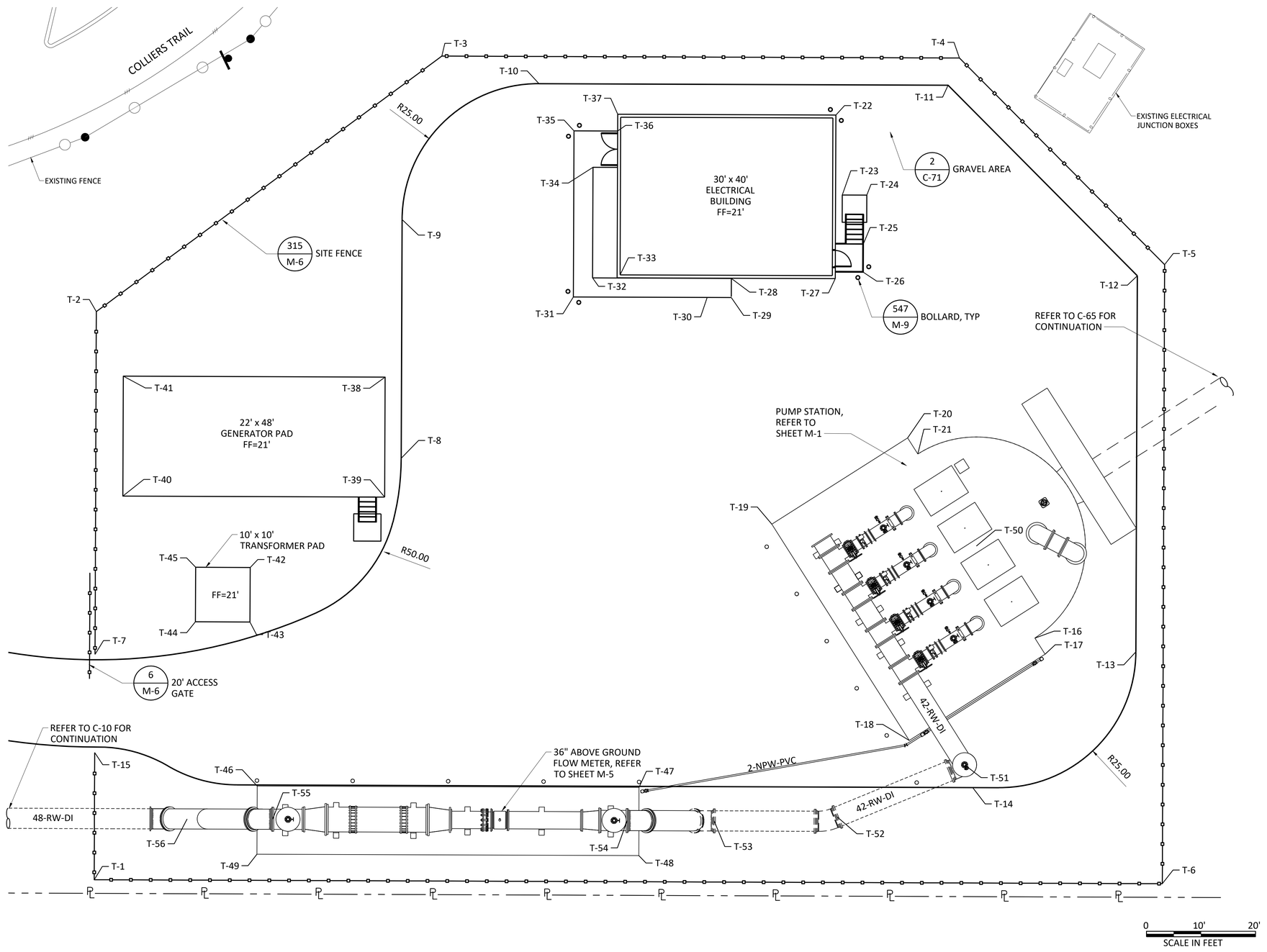

ISSUED FOR BID

Freese and Nichols, Inc.
Texas Registered Engineering Firm F-2144

STATE OF TEXAS
SOMMER CHAUNCEY HUGHES
118309
LICENSED
PROFESSIONAL ENGINEER
01-19-2022

FREESE AND NICHOLS
10497 Town and Country Way,
Suite 600
Houston, Texas 77024
Phone - (713) 600-6800
Web - www.freese.com

CITY OF BEAUMONT
COLLIER'S FERRY PUMP STATION

CIVIL
COLLIER'S FERRY PUMP STATION
SITE PLAN

F&N JOB NO.	BMT20326
DATE	01/07/2022
DESIGNED	L VR
DRAWN	WF A
REVISED	-
CHECKED	ACH
FILE NAME	CV-COL-PS-SITE-PL.dwg

NO.	ISSUE	BY	DATE

VERIFY SCALE 0 1
Bar is one inch on original drawing. If not one inch on this sheet, adjust scale.

SHEET C-8
SEQ. 22

ACAD Rel: 24.0s (LMS Tech)
Filename: N:\WW\Drawings\CV-COL-PS-SITE-PL.dwg
Last Saved: 1/13/2022 8:57 AM Saved By: 02139

Plot Date: 1/13/2022 2:44 PM Plot By: 02139 Filename: N:\WW\Drawings\CV-COL-PS-SITE-PL.dwg

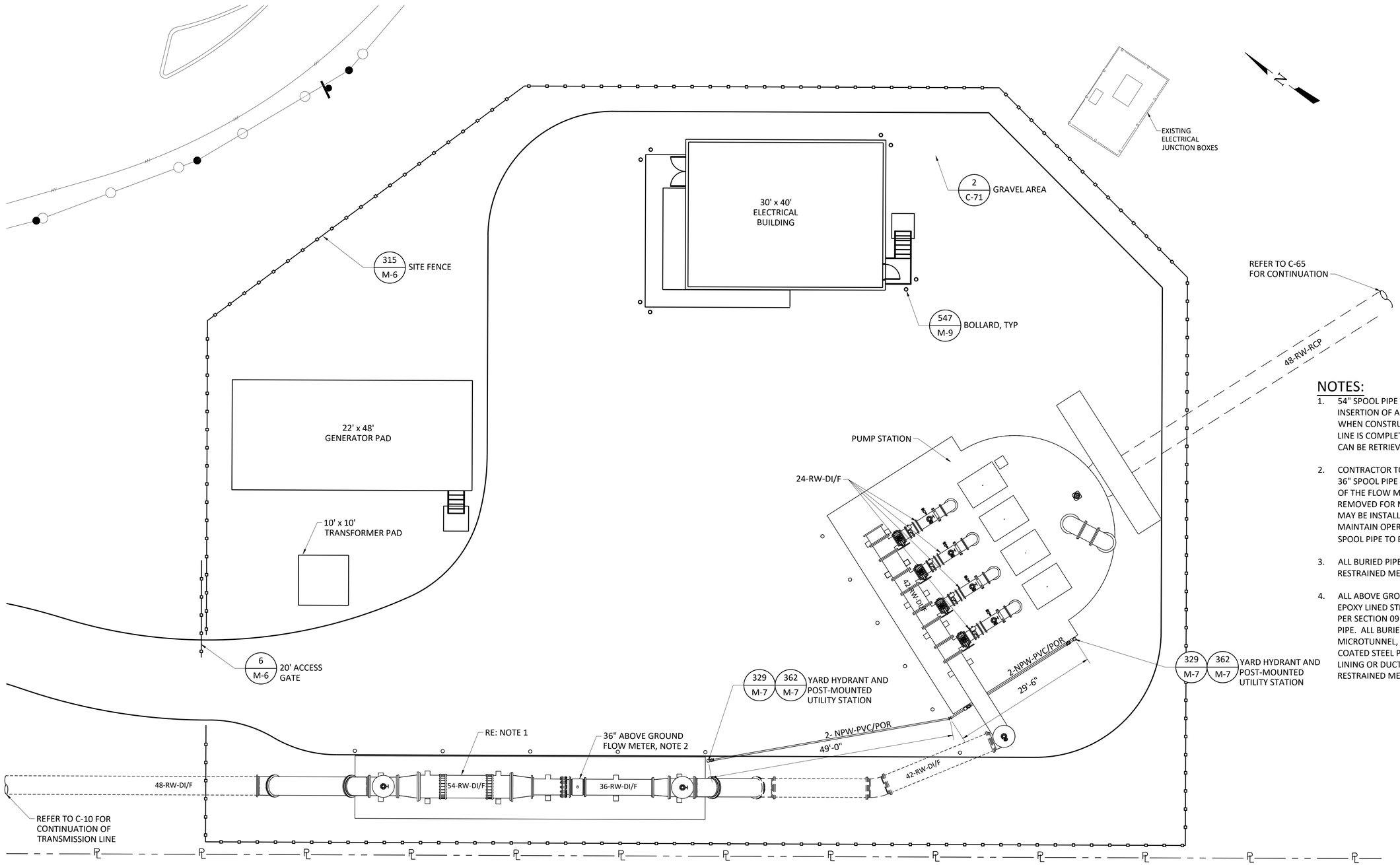

NOTES:

1. 54" SPOOL PIPE CAN BE REMOVED OR FOR INSERTION OF A PIG TO CLEAN THE LINE. WHEN CONSTRUCTION OF TRANSMISSION LINE IS COMPLETE (BY OTHERS) THE PIG CAN BE RETRIEVED AT THE PINE ST SWTP.
2. CONTRACTOR TO PROVIDE TO THE CITY A 36" SPOOL PIPE TO MATCH THE LAY LENGTH OF THE FLOW METER. IF FLOW METER REMOVED FOR MAINTENANCE, SPOOL PIPE MAY BE INSTALLED IN ITS PLACE TO MAINTAIN OPERATION OF PUMP STATION. SPOOL PIPE TO BE PER DETAIL 4/M-9.
3. ALL BURIED PIPE JOINTS SHALL BE RESTRAINED MECHANICAL JOINTS.
4. ALL ABOVE GROUND PIPING SHALL BE EPOXY LINED STEEL PIPE WITH COATING PER SECTION 09 97 16 OR DUCTILE IRON PIPE. ALL BURIED PIPING, EXCEPT FOR THE MICROTUNNEL, SHALL BE POLYURETHANE COATED STEEL PIPE WITH A MORTAR LINING OR DUCTILE IRON PIPE WITH RESTRAINED MECHANICAL JOINTS.

0 10' 20'
SCALE IN FEET

ISSUED FOR BID

Freese and Nichols, Inc.
Texas Registered Engineering Firm F-2144

STATE OF TEXAS
SOMNATH CHILUKURI
118309
LICENSED
PROFESSIONAL ENGINEER
01-19-2022

FREESE AND NICHOLS
10497 Town and Country Way,
Suite 600
Houston, Texas 77024
Phone - (713) 600-6800
Web - www.freese.com

CITY OF BEAUMONT
COLLIER'S FERRY PUMP STATION

CIVIL
COLLIER'S FERRY PUMP STATION
YARD PIPING PLAN

NO.	ISSUE	BY	DATE

F&N JOB NO. BMT20326
DATE 01/07/2022
DESIGNED LVR
DRAWN WFA
REVISED
CHECKED ACH
FILE NAME CV-PS-YP-PL.dwg

VERIFY SCALE 0 1
Bar is one inch on original drawing. If not one inch on this sheet, adjust scale.

SHEET C-9
SEQ. 23

ACAD Rel: 24.0s (LMS Tech)
Filename: N:\WW\Drawings\CV-PS-YP-PL.dwg
Last Saved: 1/14/2022 2:07 PM Saved By: 02139

Plot Date: 1/14/2022 2:19 PM Plot By: 02139 Filename: N:\WW\Drawings\CV-PS-YP-PL.dwg

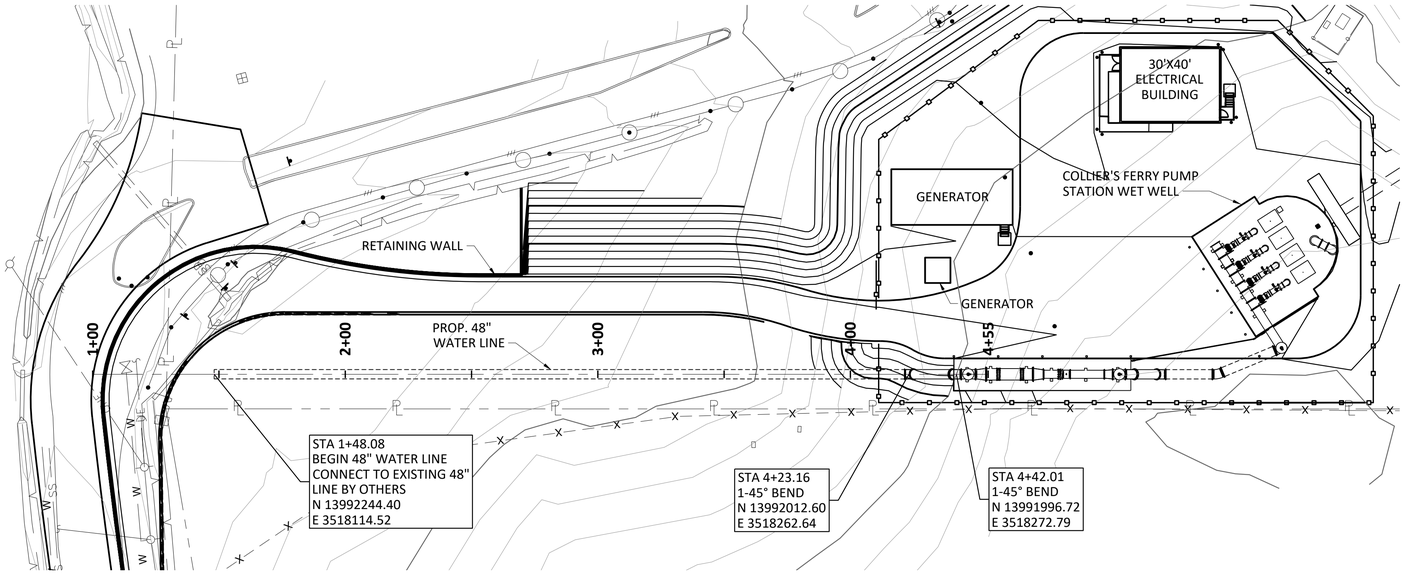

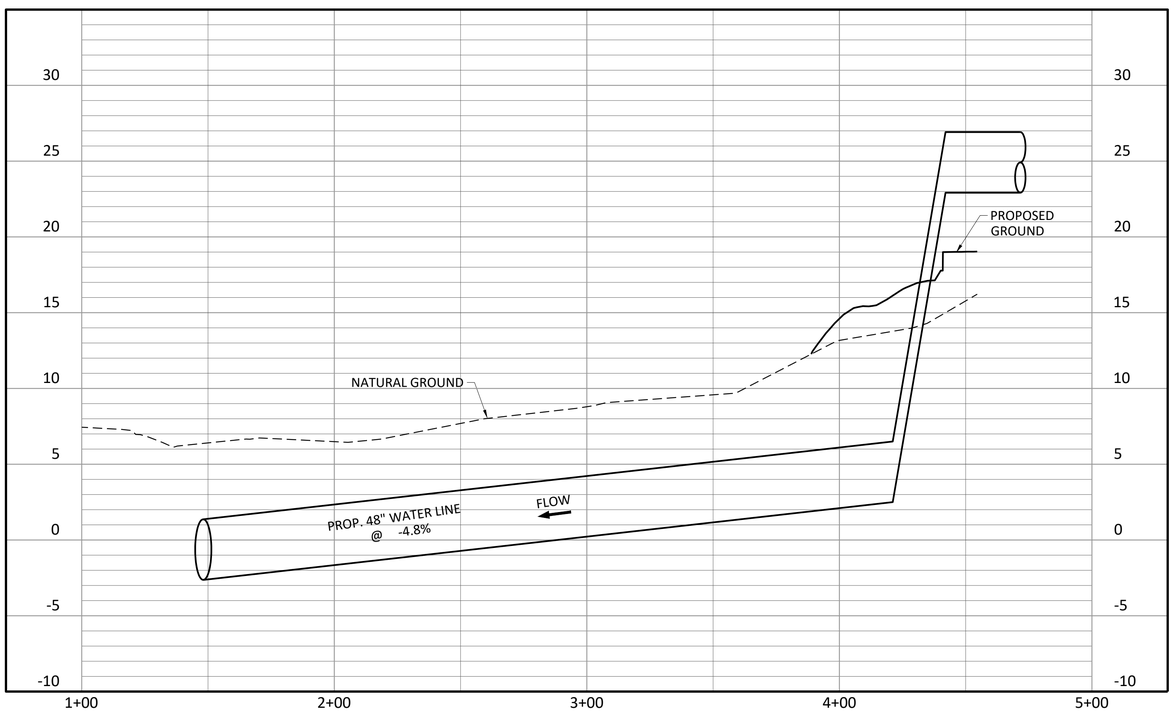

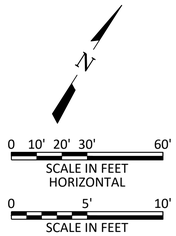

Freese and Nichols, Inc.
Texas Registered Engineering Firm F-2144

STATE OF TEXAS
SOMNATH CHILUKURI
118309
LICENSED
PROFESSIONAL ENGINEER
01-19-2022

FREESE AND NICHOLS
10497 Town and Country Way,
Suite 600
Houston, Texas 77024
Phone - (713) 600-6800
Web - www.freese.com

CITY OF BEAUMONT
COLLIER'S FERRY PUMP STATION

CIVIL
COLLIER'S FERRY PUMP STATION
DISCHARGE PIPE PLAN AND PROFILE

NO.	ISSUE	BY	DATE

F&N JOB NO. BMT20326
DATE 01/07/2022
DESIGNED LVR
DRAWN WFA
REVISED
CHECKED ACH
FILE NAME CV-YRD-PIPE-PP.dwg

VERIFY SCALE 0 1
Bar is one inch on original drawing. If not one inch on this sheet, adjust scale.

SHEET C-10
SEQ. 24

ISSUED FOR BID

ACAD Rel: 24.0s (LMS Tech)
Filename: N:\WW\Drawings\CV-YRD-PIPE-PP.dwg
Last Saved: 1/13/2022 8:58 AM Saved By: 02139

Plot Date: 1/13/2022 2:29 PM Plot By: 02139 Filename: N:\WW\Drawings\CV-YRD-PIPE-PP.dwg

TCP GENERAL NOTES

1. CONSTRUCT THE ROADWAY USING ONE-LANE TWO-WAY TRAFFIC CONTROL DURING WORKING HOURS. THIS WORK WILL BE CONSIDERED SUBSIDIARY TO ITEM 502. RESTORE TWO-WAY TRAFFIC FOR NIGHTTIME OPERATIONS UNLESS 24-HOUR WORK IS CALLED FOR ON THE PLANS OR OTHERWISE APPROVED BY THE ENGINEER.
2. ERECT/INSTALL ADVANCE WARNING SIGNS AND OTHER TRAFFIC CONTROL DEVICES IN ACCORDANCE WITH THE BC, TCP AND WZ STANDARDS, AND CITY OF BEAUMONT WATER UTILITIES DEPARMENT STANDARD SPECIFICATION.
3. UTILIZE TCP (2-2)-18 FOR WORK IN THE RIGHT-OF-WAY THAT DOES REQUIRE ONE LANE CLOSURE. THIS WORK INCLUDES PREPARING ROW, GRADING, TRENCHING, PIPING, RECONSTRUCTION OF THE ROADWAY, ETC.
4. INCORPORATE 3:1 SAFETY WEDGES FOR ALL DROP OFFS GREATER THAN TWO (2") LEFT OVERNIGHT. CONSIDER THIS SUBSIDIARY TO THE VARIOUS ITEMS.
5. ALL TRENCHES MUST BE COVERED WITH STEEL PLATE AT THE END OF EACH WORKDAY. CONSUBSIDIARY TO THE VARIOUS ITEMS.
6. CONTRACTOR TO MAINTAIN ACCESS TO HOMES AND BUSINESSES ALONG PROJECT AT ALL TIMES.
7. MAINTAIN POSITIVE DRAINAGE THROUGHOUT THE PROJECT SITE.
8. PINE ST AND THE ACCESS ROAD CAN BE CONSTRUCTED INDEPENDENTLY. THE ACCESS ROAD CAN BE CONSTRUCTED AT ANY TIME OF THE YEAR.
9. PINE ST CAN ONLY BE CONSTRUCTED BETWEEN NOVEMBER AND FEBRUARY. DURING CONSTRUCTION, ACCESS MUST BE MAINTAINED TO THE EXISTING LAWSON PUMP STATION AND THE ADJACENT PROPERTY.
10. CONTRACTOR MAY CHANGE SHOWN SEQUENCE OF CONSTRUCTION WITH PRIOR APPROVAL FROM THE ENGINEER.
11. CONTRACTOR TO ONLY CONSTRUCT TWELVE FOOT OF PINE STREET AS SHOWN IN PLANS STARTING AT WEISS ST. CONTRACTOR TO COORDINATE WITH THE CITY OF BEAUMONT ON CONSTRUCTION OF OTHER SIDE OF PINE ST STARTING AT THE INTERSECTION OF MAPLE AVE.

SEQUENCE OF WORK

A. SETUP ADVANCE WARNING SIGNS ACCORDING TO BC STANDARD.

B. INSTALL SW3P DEVICES.

C. PREPARE RIGHT OF WAY.

D. SETUP TWO-LANE ONE-WAY TRAFFIC CONTROL ACCORDING TO TCP (2-2)-18.

E. SAW CUT & EXCAVATE PINE ST.

F. CONSTRUCT PINE ST ROADWAY.

G. SAW CUT, EXCAVATE ACCESS RD, AND INSTALL RETAINING WALL.

H. CONSTRUCT ACCESS RD ROADWAY.

I. FINAL CLEAN UP.

PHASE 1 (PINE ST)

PHASE 1 CONSIST OF RECONSTRUCTING PINE STREET.

1. EXCAVATE REMAINING EXISTING PAVEMENT STRUCTURE.
2. INSTALL CROSS CULVERT.
3. PREPARE SUBGRADE WITH 10" CEMENT STABALIZED CRUSHED LIMESTONE AND 6" LIME-FLY ASH.
4. INSTALL 4" HMAC.
5. RESTORE TRAFFIC TO ALLOW ACCESS TO COUNTRY CLUB AND PUMP STATION UTILIZING BC-10-14& TCP (2-2)-18.

PHASE 2 (ACCESS RD)

PHASE 2 CONSIST OF CONSTRUCTING PAVEMENT ALONG ACCESS RD, PROP RETAINING WALL, AND CROSS CULVERT..

1. EXCAVATE REMAINING EXISTING PAVEMENT STRUCTURE.
2. INSTALL RETAINING WALL.
3. INSTALL CROSS CULVERT.
4. PREPARE SUBGRADE WITH 10" CEMENT STABALIZED CRUSHED LIMESTONE AND 6" LIME-FLY ASH STABALIZED SUBGRADE.
5. INSTALL FIRST 4" HMAC.
6. RESTORE TRAFFIC TO ORIGNAL FLOW.

ISSUED FOR BID

Freese and Nichols, Inc.
Texas Registered Engineering Firm F-2144

STATE OF TEXAS
SCOTT W. KIRBY
93651
PROFESSIONAL ENGINEER
LICENSED
1-10-2022

FREESE AND NICHOLS
10497 Town and Country Way,
Suite 600
Houston, Texas 77024
Phone - (713) 600-6800
Web - www.freese.com

CITY OF BEAUMONT
COLLIER'S FERRY PUMP STATION

TCP
GENERAL NOTES

NO.	ISSUE	BY	DATE

F&N JOB NO. BMT20326
DATE 01/07/2022
DESIGNED SWK
DRAWN RNL
REVISED
CHECKED SWK
FILE NAME TCP.dwg

VERIFY SCALE 0 1
Bar is one inch on original drawing. If not one inch on this sheet, adjust scale.

SHEET C-11
SEQ. 25

ACAD Rel: 24.0s (LMS Tech)
Filename: N:\IF\Drawings\8. Traffic\TCP.dwg
Last Saved: 1/10/2022 11:18 AM Saved By: 03952
Plot Date: 1/10/2022 12:05 PM Plot By: 03952 Filename: N:\IF\Drawings\8. Traffic\TCP.dwg

ISSUED FOR BID

Freese and Nichols, Inc.
Texas Registered Engineering Firm F-2144

STATE OF TEXAS
SCOTT W. KIRBY
93651
LICENSED
PROFESSIONAL ENGINEER
1-10-2022

FREESE AND NICHOLS
10497 Town and Country Way,
Suite 600
Houston, Texas 77024
Phone - (713) 600-6800
Web - www.freese.com

CITY OF BEAUMONT
COLLIER'S FERRY PUMP STATION

PINE STREET AND ACCESS ROAD
CONSTRUCTION SEQUENCE

NO.	ISSUE	BY	DATE

F&N JOB NO. BMT20326
DATE 01/07/2022
DESIGNED SWK
DRAWN RNL
REVISED
CHECKED SWK

FILE NAME TCP.dwg

VERIFY SCALE 0 1
Bar is one inch on original drawing. If not one inch on this sheet, adjust scale.

SHEET C-12
SEQ. 26

ACAD Rel: 24.0s (LMS Tech)
Filename: N:\IF\Drawings\8. Traffic\TCP.dwg
Last Saved: 1/10/2022 11:18 AM Saved By: 03952

Plot Date: 1/10/2022 12:05 PM Plot By: 03952 Filename: N:\IF\Drawings\8. Traffic\TCP.dwg

DISCLAIMER:
The use of this standard is governed by the "Texas Engineering Practice Act". No warranty of any kind is made by TxDOT for any purpose whatsoever. TxDOT assumes no responsibility for the conversion of this standard to other formats or for incorrect results or damages resulting from its use.

BARRICADE AND CONSTRUCTION (BC) STANDARD SHEETS GENERAL NOTES:

1. The Barricade and Construction Standard Sheets (BC sheets) are intended to show typical examples for placement of temporary traffic control devices, construction pavement markings, and typical work zone signs. The information contained in these sheets meet or exceed the requirements shown in the "Texas Manual on Uniform Traffic Control Devices" (TMUTCD).

2. The development and design of the Traffic Control Plan (TCP)is the responsibility of the Engineer.

3. The Contractor may propose changes to the TCP that are signed and sealed by a licensed professional engineer for approval. The Engineer may develop, sign and seal Contractor proposed changes.

4. The Contractor is responsible for installing and maintaining the traffic control devices as shown in the plans. The Contractor may not move or change the approximate location of any device without the approval of the Engineer.

5. Geometric design of lane shifts and detours should, when possible, meet the applicable design criteria contained in manuals such as the American Association of State Highway and Transportation Officials (AASHTO), "A Policy on Geometric Design of Highways and Streets," the TxDOT "Roadway Design Manual" or engineering judgment.

6. When projects abut, the Engineer(s) may omit the END ROAD WORK, TRAFFIC FINES DOUBLE, and other advance warning signs if the signing would be redundant and the work areas appear continuous to the motorists. If the adjacent project is completed first, the Contractor shall erect the necessary warning signs as shown on these sheets, the TCP sheets or as directed by the Engineer. The BEGIN ROAD WORK NEXT X MILES sign shall be revised to show appropriate work zone distance.

7. The Engineer may require duplicate warning signs on the median side of divided highways where median width will permit and traffic volumes justify the signing.

8. All signs shall be constructed in accordance with the details found in the "Standard Highway Sign Designs for Texas," latest edition. Sign details not shown in this manual shall be shown in the plans or the Engineer shall provide a detail to the Contractor before the sign is manufactured.

9. The temporary traffic control devices shown in the illustrations of the BC sheets are examples. As necessary, the Engineer will determine the most appropriate traffic control devices to be used.

10. Where highway construction or maintenance work is being undertaken, other than mobile operations as defined by the Texas Manual on Uniform Traffic Control Devices, CSJ limit signs are required. CSJ limit signs are shown on BC(2). The OBEY WARNING SIGNS STATE LAW sign, STAY ALERT TALK OR TEXT LATER and the WORK ZONE TRAFFIC FINES DOUBLE sign with plaque shall be erected in advance of the CSJ limits. The BEGIN ROAD WORK NEXT X MILES, CONTRACTOR and END ROAD WORK signs shall be erected at or near the CSJ limits. For mobile operations, CSJ limit signs are not required.

11. Traffic control devices should be in place only while work is actually in progress or a definite need exists.

12. The Engineer has the final decision on the location of all traffic control devices.

13. Inactive equipment and work vehicles, including workers' private vehicles must be parked away from travel lanes. They should be as close to the right-of-way line as possible, or located behind a barrier or guardrail, or as approved by the Engineer.

WORKER SAFETY NOTES:

1. Workers on foot who are exposed to traffic or to construction equipment within the right-of-way shall wear high-visibility safety apparel meeting the requirements of ISEA "American National Standard for High-Visibility Apparel," or equivalent revisions, and labeled as ANSI 107-2004 standard performance for Class 2 or 3 risk exposure. Class 3 garments should be considered for high traffic volume work areas or night time work.

2. Except in emergency situations, flagger stations shall be illuminated when flagging is used at night.

COMPLIANT WORKZONE TRAFFIC CONTROL DEVICES

1. Only pre-qualified products shall be used. The "Compliant Work Zone Traffic Control Devices List" (CWZTCD) describes pre-qualified products and their sources.

2. Work zone traffic control devices shall be compliant with the Manual for Assessing safety Hardware (MASH).

THE DOCUMENTS BELOW CAN BE FOUND ON-LINE AT http://www.txdot.gov
COMPLIANT WORK ZONE TRAFFIC CONTROL DEVICES LIST (CWZTCD)
DEPARTMENTAL MATERIAL SPECIFICATIONS (DMS)
MATERIAL PRODUCER LIST (MPL)
ROADWAY DESIGN MANUAL - SEE "MANUALS (ONLINE MANUALS)"
STANDARD HIGHWAY SIGN DESIGNS FOR TEXAS (SHSD)
TEXAS MANUAL ON UNIFORM TRAFFIC CONTROL DEVICES (TMUTCD)
TRAFFIC ENGINEERING STANDARD SHEETS

Texas Department of Transportation — Traffic Safety Division Standard

BARRICADE AND CONSTRUCTION GENERAL NOTES AND REQUIREMENTS

BC(1)-21

FILE: bc-21.dgn	DN: TxDOT	CK: TxDOT	DW: TxDOT	CK: TxDOT
© TxDOT November 2002	CONT	SECT	JOB	HIGHWAY
REVISIONS 4-03 7-13 9-07 8-14 5-10 5-21	DIST	COUNTY		SHEET NO. 27

DATE:
FILE:

DISCLAIMER:
The use of this standard is governed by the "Texas Engineering Practice Act". No warranty of any kind is made by TxDOT for any purpose whatsoever. TxDOT assumes no responsibility for the conversion of this standard to other formats or for incorrect results or damages resulting from its use.

TYPICAL LOCATION OF CROSSROAD SIGNS

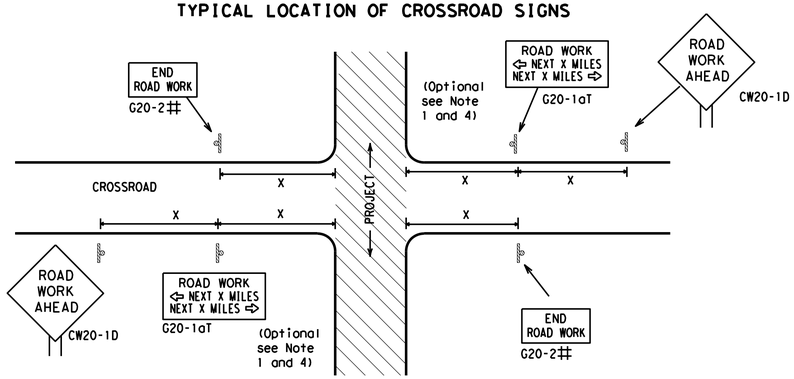

May be mounted on back of "ROAD WORK AHEAD"(CW20-1D) sign with approval of Engineer. (See note 2 below)

1. The typical minimum signing on a crossroad approach should be a "ROAD WORK AHEAD" (CW20-1D)sign and a (G20-2) "END ROAD WORK" sign, unless noted otherwise in plans.
2. The Engineer may use the reduced size 36" x 36" ROAD WORK AHEAD (CW20-1D) sign mounted back to back with the reduced size 36" x 18" "END ROAD WORK"(G20-2) sign on low volume crossroads (see Note 4 under "Typical Construction Warning Sign Size and Spacing"). See the "Standard Highway Sign Designs for Texas" manual for sign details. The Engineer may omit the advance warning signs on low volume crossroads. The Engineer will determine whether a road is low volume as per TMUTCD Part 5. This information shall be shown in the plans.
3. Based on existing field conditions, the Engineer/Inspector may require additional signs such as FLAGGER AHEAD, LOOSE GRAVEL, or other appropriate signs. When additional signs are required, these signs will be considered part of the minimum requirements. The Engineer/Inspector will determine the proper location and spacing of any sign not shown on the BC sheets, Traffic Control Plan sheets or the Work Zone Standard Sheets.
4. The "ROAD WORK NEXT X MILES"(G20-1aT)sign shall be required at high volume crossroads to advise motorists of the length of construction in either direction from the intersection. The Engineer will determine whether a roadway is considered high volume.
5. Additional traffic control devices may be shown elsewhere in the plans for higher volume crossroads.
6. When work occurs in the intersection area, appropriate traffic control devices, as shown elsewhere in the plans or as determined by the Engineer/Inspector, shall be in place.

T-INTERSECTION

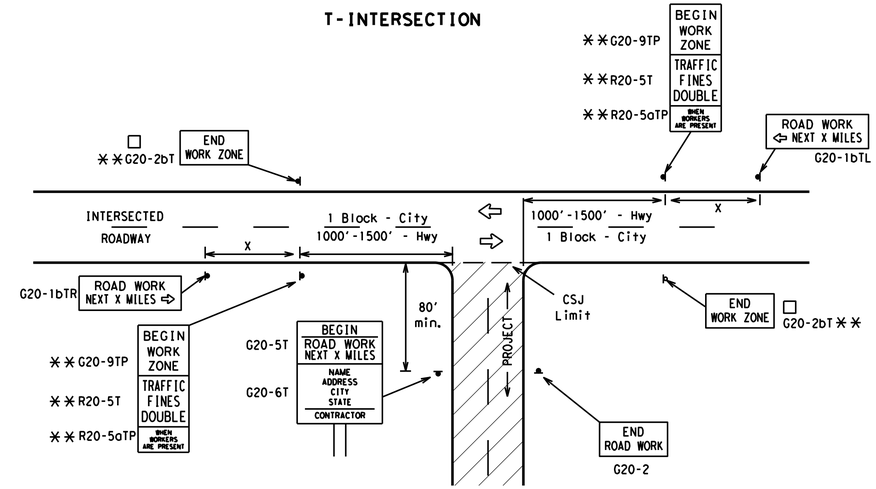

CSJ LIMITS AT T-INTERSECTION

1. The Engineer will determine the types and location of any additional traffic control devices, such as a flagger and accompanying signs, or other signs, that should be used when work is being performed at or near an intersection.
2. If construction closes the road at a T-intersection, the Contractor shall place the "CONTRACTOR NAME"(G20-6T) sign behind the Type 3 Barricades for the road closure (see BC(10) also). The "ROAD WORK NEXT X MILES" left arrow(G20-1bTL) and "ROAD WORK NEXT X MILES" right arrow (G20-1bTR)" signs shall be replaced by the detour signing called for in the plans.

TYPICAL CONSTRUCTION WARNING SIGN SIZE AND SPACING[1,5,6]

SIZE

Sign Number or Series	Conventional Road	Expressway/ Freeway
CW20[4] CW21 CW22 CW23 CW25	48" x 48"	48" x 48"
CW1, CW2, CW7, CW8, CW9, CW11, CW14	36" x 36"	48" x 48"
CW3, CW4, CW5, CW6, CW8-3, CW10, CW12	48" x 48"	48" x 48"

SPACING

Posted Speed	Sign △ Spacing "X"
MPH	Feet (Apprx.)
30	120
35	160
40	240
45	320
50	400
55	500[2]
60	600[2]
65	700[2]
70	800[2]
75	900[2]
80	1000[2]
✱	✱[3]

✱ For typical sign spacings on divided highways, expressways and freeways, see Part 6 of the "Texas Manual on Uniform Traffic Control Devices" (TMUTCD) typical application diagrams or TCP Standard Sheets.

△ Minimum distance from work area to first Advance Warning sign nearest the work area and/or distance between each additional sign.

GENERAL NOTES

1. Special or larger size signs may be used as necessary.
2. Distance between signs should be increased as required to have 1500 feet advance warning.
3. Distance between signs should be increased as required to have 1/2 mile or more advance warning.
4. 36" x 36" "ROAD WORK AHEAD" (CW20-1D)signs may be used on low volume crossroads at the discretion of the Engineer as per TMUTCD Part 5. See Note 2 under "Typical Location of Crossroad Signs".
5. Only diamond shaped warning sign sizes are indicated.
6. See sign size listing in "TMUTCD", Sign Appendix or the "Standard Highway Sign Designs for Texas" manual for complete list of available sign design sizes.

WORK AREAS IN MULTIPLE LOCATIONS WITHIN CSJ LIMITS

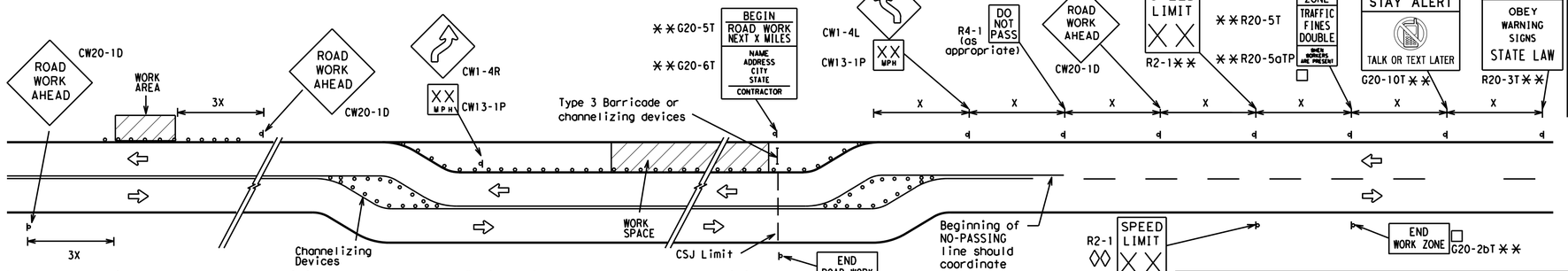

When extended distances occur between minimal work spaces, the Engineer/Inspector should ensure additional "ROAD WORK AHEAD"(CW20-1D)signs are placed in advance of these work areas to remind drivers they are still within the project limits. See the applicable TCP sheets for exact location and spacing of signs and channelizing devices.

SAMPLE LAYOUT OF SIGNING FOR WORK BEGINNING AT THE CSJ LIMITS

SAMPLE LAYOUT OF SIGNING FOR WORK BEGINNING DOWNSTREAM OF THE CSJ LIMITS

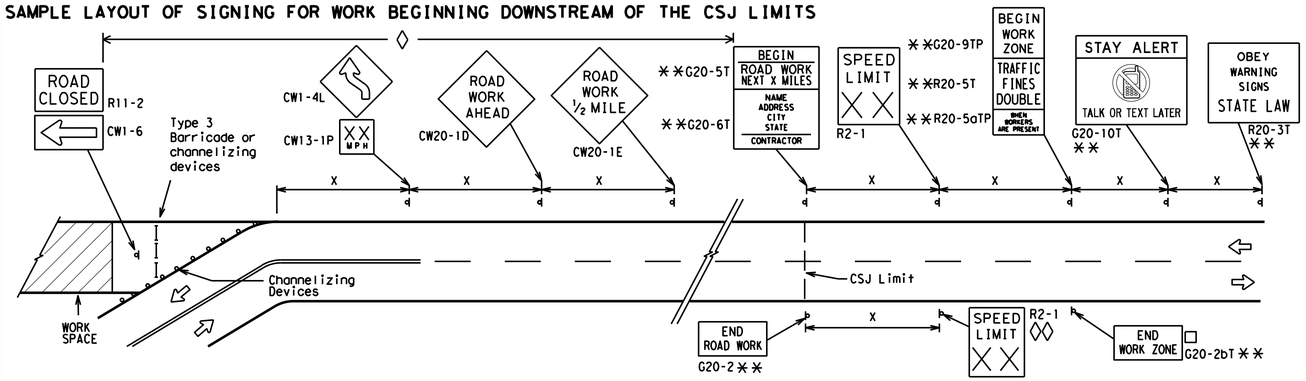

NOTES

The Contractor shall determine the appropriate distance to be placed on the G20-1 series signs and "BEGIN ROAD WORK NEXT X MILES"(G20-5T)sign for each specific project. This distance shall replace the "X" and shall be rounded to the nearest whole mile with the approval of the Engineer. No decimals shall be used.

□ The "BEGIN WORK ZONE"(G20-9TP) and "END WORK ZONE" (G20-2bT) shall be used as shown on the sample layout when advance signs are required outside the CSJ Limits. They inform the motorist of entering or leaving a part of the work zone lying outside the CSJ Limits where traffic fines may double if workers are present.

✱✱ CSJ limit signing is required for highway construction and maintenance work, with the exception of mobile operations.

◊ Area for placement of "ROAD WORK AHEAD" (CW20-1D)sign and other signs or devices as called for on the Traffic Control Plan.

◊◊ Contractor will install a regulatory speed limit sign at the end of the work zone.

LEGEND	
⊢⊣	Type 3 Barricade
○ ○ ○	Channelizing Devices
▬	Sign
X	See Typical Construction Warning Sign Size and Spacing chart or the TMUTCD for sign spacing requirements.

SHEET 2 OF 12

Texas Department of Transportation — Traffic Safety Division Standard

BARRICADE AND CONSTRUCTION PROJECT LIMIT

BC(2)-21

FILE: bc-21.dgn	DN: TxDOT	CK: TxDOT	DW: TxDOT	CK: TxDOT
© TxDOT November 2002	CONT	SECT	JOB	HIGHWAY
REVISIONS 9-07 8-14 7-13 5-21	DIST	COUNTY		SHEET NO. 28

DATE:
FILE:

TYPICAL APPLICATION OF WORK ZONE SPEED LIMIT SIGNS

Work zone speed limits shall be regulatory, established in accordance with the "Procedures for Establishing Speed Zones," and approved by the Texas Transportation Commission, or by City Ordinance when within Incorporated City Limits.

Reduced speeds should only be posted in the vicinity of work activity and not throughout the entire project.

Regulatory work zone speed signs (R2-1) shall be removed or covered during periods when they are not needed.

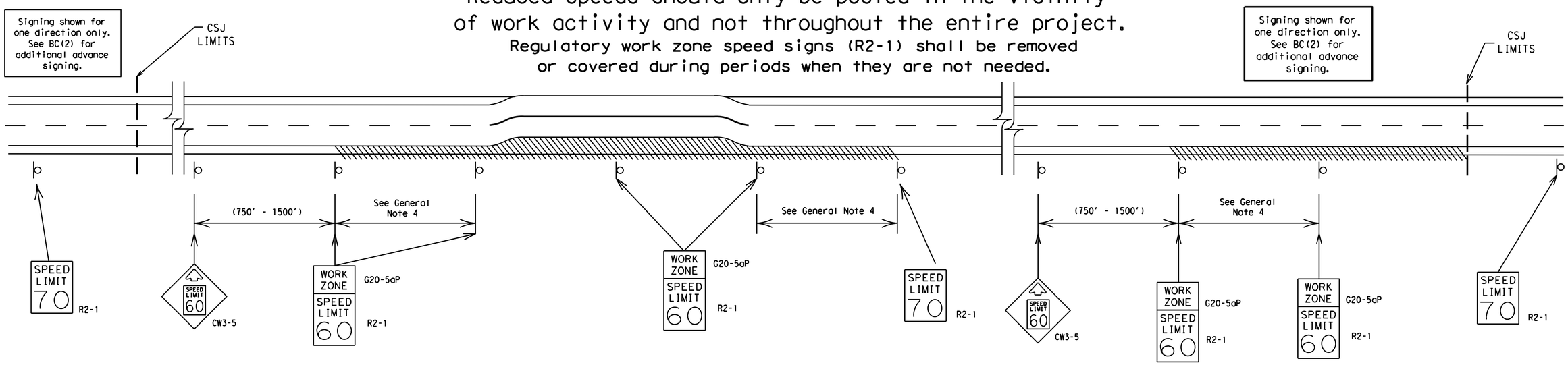

GUIDANCE FOR USE:

LONG/INTERMEDIATE TERM WORK ZONE SPEED LIMITS

This type of work zone speed limit should be included on the design of the traffic control plans when restricted geometrics with a lower design speed are present in the work zone and modification of the geometrics to a higher design speed is not feasible.

Long/Intermediate Term Work Zone Speed Limit signs, when approved as described above, should be posted and visible to the motorist when work activity is present. Work activity may also be defined as a change in the roadway that requires a reduced speed for motorists to safely negotiate the work area, including:

a) rough road or damaged pavement surface
b) substantial alteration of roadway geometrics (diversions)
c) construction detours
d) grade
e) width
f) other conditions readily apparent to the driver

As long as any of these conditions exist, the work zone speed limit signs should remain in place.

SHORT TERM WORK ZONE SPEED LIMITS

This type of work zone speed limit may be included on the design of the traffic control plans when workers or equipment are not behind concrete barrier, when work activity is within 10 feet of the traveled way or actually in the traveled way.

Short Term Work Zone Speed Limit signs should be posted and visible to the motorists only when work activity is present. When work activity is not present, signs shall be removed or covered.
(See Removing or Covering on BC(4)).

GENERAL NOTES

1. Regulatory work zone speed limits should be used only for sections of construction projects where speed control is of major importance.
2. Regulatory work zone speed limit signs shall be placed on supports at a 7 foot minimum mounting height.
3. Speed zone signs are illustrated for one direction of travel and are normally posted for each direction of travel.
4. Frequency of work zone speed limit signs should be:
   40 mph and greater 0.2 to 2 miles
   35 mph and less 0.2 to 1 mile
5. Regulatory speed limit signs shall have black legend and border on a white reflective background (See "Reflective Sheeting" on BC(4)).
6. Fabrication, erection and maintenance of the"ADVANCE SPEED LIMIT"(CW3-5)sign, "WORK ZONE"(G20-5aP) plaque and the "SPEED LIMIT"(R2-1)signs shall not be paid for directly, but shall be considered subsidiary to Item 502.
7. Turning signs from view, laying signs over or down will not be allowed, unless as otherwise noted under "REMOVING OR COVERING" on BC(4).
8. Techniques that may help reduce traffic speeds include but are not limited to:
   A. Law enforcement.
   B. Flagger stationed next to sign.
   C. Portable changeable message sign (PCMS).
   D. Low-power (drone) radar transmitter.
   E. Speed monitor trailers or signs.
9. Speeds shown on details above are for illustration only. Work Zone Speed Limits should only be posted as approved for each project.
10. For more specific guidance concerning the type of work, work zone conditions and factors impacting allowable regulatory construction speed zone reduction see TxDOT form #1204 in the TxDOT e-form system.

DISCLAIMER: The use of this standard is governed by the "Texas Engineering Practice Act". No warranty of any kind is made by TxDOT for any purpose whatsoever. TxDOT assumes no responsibility for the conversion of this standard to other formats or for incorrect results or damages resulting from its use.

DATE:
FILE:

SHEET 3 OF 12

Texas Department of Transportation — Traffic Safety Division Standard

BARRICADE AND CONSTRUCTION WORK ZONE SPEED LIMIT

BC(3)-21

FILE: bc-21.dgn	DN: TxDOT	CK: TxDOT	DW: TxDOT	CK: TxDOT
©TxDOT November 2002	CONT	SECT	JOB	HIGHWAY
REVISIONS 9-07 8-14 7-13 5-21	DIST	COUNTY		SHEET NO. 29

DISCLAIMER:
The use of this standard is governed by the "Texas Engineering Practice Act". No warranty of any kind is made by TxDOT for any purpose whatsoever. TxDOT assumes no responsibility for the conversion of this standard to other formats or for incorrect results or damages resulting from its use.

TYPICAL MINIMUM CLEARANCES FOR LONG TERM AND INTERMEDIATE TERM SIGNS

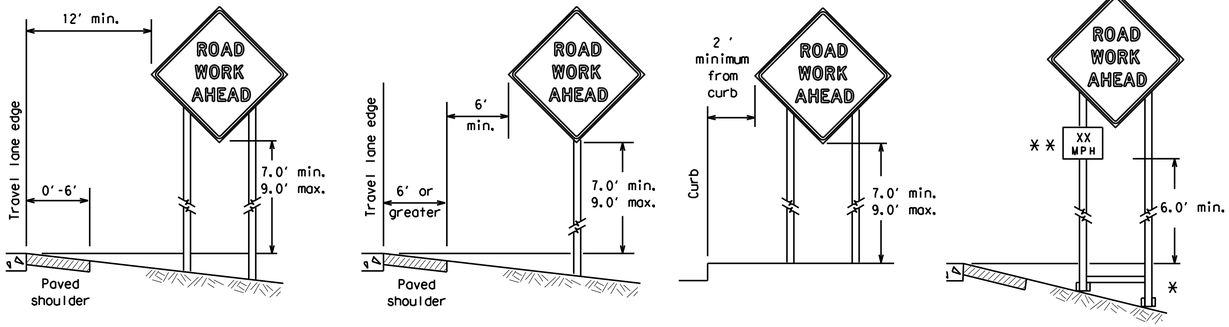

✱ When placing skid supports on unlevel ground, the leg post lengths must be adjusted so the sign appears straight and plumb. Objects shall NOT be placed under skids as a means of leveling.

✱✱ When plaques are placed on dual-leg supports, they should be attached to the upright nearest the travel lane. Supplemental plaques (advisory or distance) should not cover the surface of the parent sign.

ATTACHMENT FOR SIGN SUPPORTS

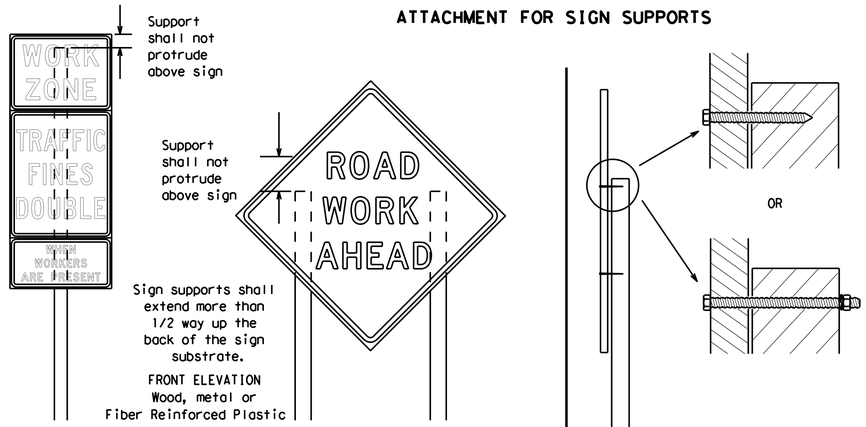

Attachment to wooden supports will be by bolts and nuts or screws. Use TxDOT's or manufacturer's recommended procedures for attaching sign substrates to other types of sign supports

Nails shall NOT be allowed. Each sign shall be attached directly to the sign support. Multiple signs shall not be joined or spliced by any means. Wood supports shall not be extended or repaired by splicing or other means.

Splicing embedded perforated square metal tubing in order to extend post height will only be allowed when the splice is made using four bolts, two above and two below the spice point. Splice must be located entirely behind the sign substrate, not near the base of the support. Splice insert lengths should be at least 5 times nominal post size, centered on the splice and of at least the same gauge material.

STOP/SLOW PADDLES

1. STOP/SLOW paddles are the primary method to control traffic by flaggers. The STOP/SLOW paddle size should be 24" x 24".
2. STOP/SLOW paddles shall be retroreflectorized when used at night.
3. STOP/SLOW paddles may be attached to a staff with a minimum length of 6' to the bottom of the sign.
4. Any lights incorporated into the STOP or SLOW paddle faces shall only be as specifically described in Section 6E.03 Hand Signaling Devices in the TMUTCD.

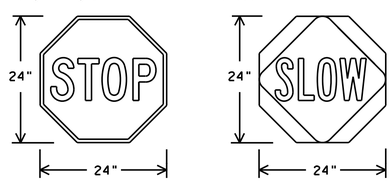

Background - Red
Legend & Border - White

Background - Orange
Legend & Border - Black

SHEETING REQUIREMENTS (WHEN USED AT NIGHT)		
USAGE	COLOR	SIGN FACE MATERIAL
BACKGROUND	RED	TYPE B OR C SHEETING
BACKGROUND	ORANGE	TYPE B_{FL} OR C_{FL} SHEETING
LEGEND & BORDER	WHITE	TYPE B OR C SHEETING
LEGEND & BORDER	BLACK	ACRYLIC NON-REFLECTIVE FILM

CONTRACTOR REQUIREMENTS FOR MAINTAINING PERMANENT SIGNS WITHIN THE PROJECT LIMITS

1. Permanent signs are used to give notice of traffic laws or regulations, call attention to conditions that are potentially hazardous to traffic operations, show route designations, destinations, directions, distances, services, points of interest, and other geographical, recreational, specific service (LOGO), or cultural information. Drivers proceeding through a work zone need the same, if not better route guidance as normally installed on a roadway without construction.
2. When permanent regulatory or warning signs conflict with work zone conditions, remove or cover the permanent signs until the permanent sign message matches the roadway condition. For details for covering large guide signs see the TS-CD standard.
3. When existing permanent signs are moved and relocated due to construction purposes, they shall be visible to motorists at all times.
4. If existing signs are to be relocated on their original supports, they shall be installed on crashworthy bases as shown on the SMD Standard sheets. The signs shall meet the required mounting heights shown on the BC Sheets or the SMD Standards. This work should be paid for under the appropriate pay item for relocating existing signs.
5. If permanent signs are to be removed and relocated using temporary supports, the Contractor shall use crashworthy supports as shown on the BC standard sheets, TLRS standard sheets or the CWZTCD list. The signs shall meet the required mounting heights shown on the BC, or the SMD standard sheets during construction. This work should be paid for under the appropriate pay item for relocating existing signs.
6. Any sign or traffic control device that is struck or damaged by the Contractor or his/her construction equipment shall be replaced as soon as possible by the Contractor to ensure proper guidance for the motorists. This will be subsidiary to Item 502.

GENERAL NOTES FOR WORK ZONE SIGNS

1. Contractor shall install and maintain signs in a straight and plumb condition and/or as directed by the Engineer.
2. Wooden sign posts shall be painted white.
3. Barricades shall NOT be used as sign supports.
4. All signs shall be installed in accordance with the plans or as directed by the Engineer. Signs shall be used to regulate, warn, and guide the traveling public safely through the work zone.
5. The Contractor may furnish either the sign design shown in the plans or in the "Standard Highway Sign Designs for Texas" (SHSD). The Engineer/Inspector may require the Contractor to furnish other work zone signs that are shown in the TMUTCD but may have been omitted from the plans. Any variation in the plans shall be documented by written agreement between the Engineer and the Contractor's Responsible Person. All changes must be documented in writing before being implemented. This can include documenting the changes in the Inspector's TxDOT diary and having both the Inspector and Contractor initial and date the agreed upon changes.
6. The Contractor shall furnish sign supports listed in the "Compliant Work Zone Traffic Control Device List" (CWZTCD) for small roadside signs. Supports for temporary large roadside signs shall meet the requirements detailed on the Temporary Large Roadside Signs (TLRS) standard sheets. The Contractor shall install the sign support in accordance with the manufacturer's recommendations. If there is a question regarding installation procedures, the Contractor shall furnish the Engineer a copy of the manufacturer's installation recommendations so the Engineer can verify the correct procedures are being followed.
7. The Contractor is responsible for installing signs on approved supports and replacing signs with damaged or cracked substrates and/or damaged or marred reflective sheeting as directed by the Engineer/Inspector.
8. Identification markings may be shown only on the back of the sign substrate. The maximum height of letters and/or company logos used for identification shall be 1 inch.
9. The Contractor shall replace damaged wood posts. New or damaged wood sign posts shall not be spliced.

DURATION OF WORK (as defined by the "Texas Manual on Uniform Traffic Control Devices" Part 6)

1. The types of sign supports, sign mounting height, the size of signs, and the type of sign substrates can vary based on the type of work being performed. The Engineer is responsible for selecting the appropriate size sign for the type of work being performed. The Contractor is responsible for ensuring the sign support, sign mounting height and substrate meets manufacturer's recommendations in regard to crashworthiness and duration of work requirements.
   a. Long-term stationary - work that occupies a location more than 3 days.
   b. Intermediate-term stationary - work that occupies a location more than one daylight period up to 3 days, or nighttime work lasting more than one hour.
   c. Short-term stationary - daytime work that occupies a location for more than 1 hour in a single daylight period.
   d. Short, duration - work that occupies a location up to 1 hour.
   e. Mobile - work that moves continuously or intermittently (stopping for up to approximately 15 minutes.)

SIGN MOUNTING HEIGHT

1. The bottom of Long-term/Intermediate-term signs shall be at least 7 feet, but not more than 9 feet, above the paved surface, except as shown for supplemental plaques mounted below other signs.
2. The bottom of Short-term/Short Duration signs shall be a minimum of 1 foot above the pavement surface but no more than 2 feet above the ground.
3. Long-term/Intermediate-term Signs may be used in lieu of Short-term/Short Duration signing.
4. Short-term/Short Duration signs shall be used only during daylight and shall be removed at the end of the workday or raised to appropriate Long-term/Intermediate sign height.
5. Regulatory signs shall be mounted at least 7 feet, but not more than 9 feet, above the paved surface regardless of work duration.

SIZE OF SIGNS

1. The Contractor shall furnish the sign sizes shown on BC (2) unless otherwise shown in the plans or as directed by the Engineer.

SIGN SUBSTRATES

1. The Contractor shall ensure the sign substrate is installed in accordance with the manufacturer's recommendations for the type of sign support that is being used. The CWZTCD lists each substrate that can be used on the different types and models of sign supports.
2. "Mesh" type materials are NOT an approved sign substrate, regardless of the tightness of the weave.
3. All wooden individual sign panels fabricated from 2 or more pieces shall have one or more plywood cleat, 1/2" thick by 6" wide, fastened to the back of the sign and extending fully across the sign. The cleat shall be attached to the back of the sign using wood screws that do not penetrate the face of the sign panel. The screws shall be placed on both sides of the splice and spaced at 6" centers. The Engineer may approve other methods of splicing the sign face.

REFLECTIVE SHEETING

1. All signs shall be retroreflective and constructed of sheeting meeting the color and retro-reflectivity requirements of DMS-8300 for rigid signs or DMS-8310 for roll-up signs. The web address for DMS specifications is shown on BC(1).
2. White sheeting, meeting the requirements of DMS-8300 Type A, shall be used for signs with a white background.
3. Orange sheeting, meeting the requirements of DMS-8300 Type B_{FL} or Type C_{FL}, shall be used for rigid signs with orange backgrounds.

SIGN LETTERS

1. All sign letters and numbers shall be clear, and open rounded type uppercase alphabet letters as approved by the Federal Highway Administration (FHWA) and as published in the "Standard Highway Sign Design for Texas" manual. Signs, letters and numbers shall be of first class workmanship in accordance with Department Standards and Specifications.

REMOVING OR COVERING

1. When sign messages may be confusing or do not apply, the signs shall be removed or completely covered.
2. Long-term stationary or intermediate stationary signs installed on square metal tubing may be turned away from traffic 90 degrees when the sign message is not applicable. This technique may not be used for signs installed in the median of divided highways or near any intersections where the sign may be seen from approaching traffic.
3. Signs installed on wooden skids shall not be turned at 90 degree angles to the roadway. These signs should be removed or completely covered when not required.
4. When signs are covered, the material used shall be opaque, such as heavy mil black plastic, or other materials which will cover the entire sign face and maintain their opaque properties under automobile headlights at night, without damaging the sign sheeting.
5. Burlap shall NOT be used to cover signs.
6. Duct tape or other adhesive material shall NOT be affixed to a sign face.
7. Signs and anchor stubs shall be removed and holes backfilled upon completion of work.

SIGN SUPPORT WEIGHTS

1. Where sign supports require the use of weights to keep from turning over, the use of sandbags with dry, cohesionless sand should be used.
2. The sandbags will be tied shut to keep the sand from spilling and to maintain a constant weight.
3. Rock, concrete, iron, steel or other solid objects shall not be permitted for use as sign support weights.
4. Sandbags should weigh a minimum of 35 lbs and a maximum of 50 lbs.
5. Sandbags shall be made of a durable material that tears upon vehicular impact. Rubber (such as tire inner tubes) shall NOT be used.
6. Rubber ballasts designed for channelizing devices should not be used for ballast on portable sign supports. Sign supports designed and manufactured with rubber bases may be used when shown on the CWZTCD list.
7. Sandbags shall only be placed along or laid over the base supports of the traffic control device and shall not be suspended above ground level or hung with rope, wire, chains or other fasteners. Sandbags shall be placed along the length of the skids to weigh down the sign support.
8. Sandbags shall NOT be placed under the skid and shall not be used to level sign supports placed on slopes.

FLAGS ON SIGNS

1. Flags may be used to draw attention to warning signs. When used, the flag shall be 16 inches square or larger and shall be orange or fluorescent red-orange in color. Flags shall not be allowed to cover any portion of the sign face.

Texas Department of Transportation — Traffic Safety Division Standard

BARRICADE AND CONSTRUCTION TEMPORARY SIGN NOTES

BC(4)-21

FILE: bc-21.dgn	DN: TxDOT	CK: TxDOT	DW: TxDOT	CK: TxDOT
©TxDOT November 2002	CONT	SECT	JOB	HIGHWAY
REVISIONS 9-07 8-14, 7-13 5-21	DIST		COUNTY	SHEET NO. 30

DATE:
FILE:

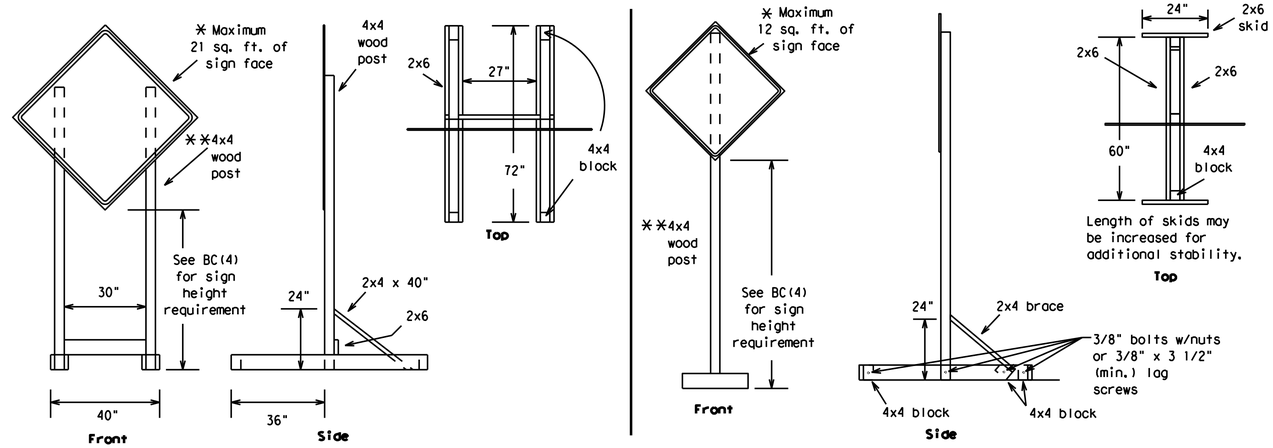

SKID MOUNTED WOOD SIGN SUPPORTS

* LONG/INTERMEDIATE TERM STATIONARY - PORTABLE SKID MOUNTED SIGN SUPPORTS

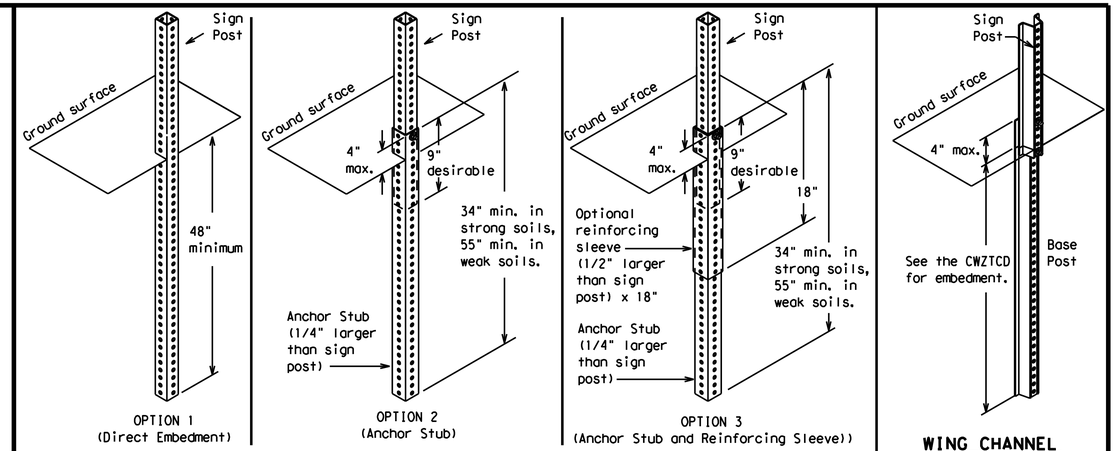

PERFORATED SQUARE METAL TUBING

WING CHANNEL
Lap-splice/base bolted anchor

GROUND MOUNTED SIGN SUPPORTS

Refer to the CWZTCD and the manufacturer's installation procedure for each type sign support.
The maximum sign square footage shall adhere to the manufacturer's recommendation.
Two post installations can be used for larger signs.

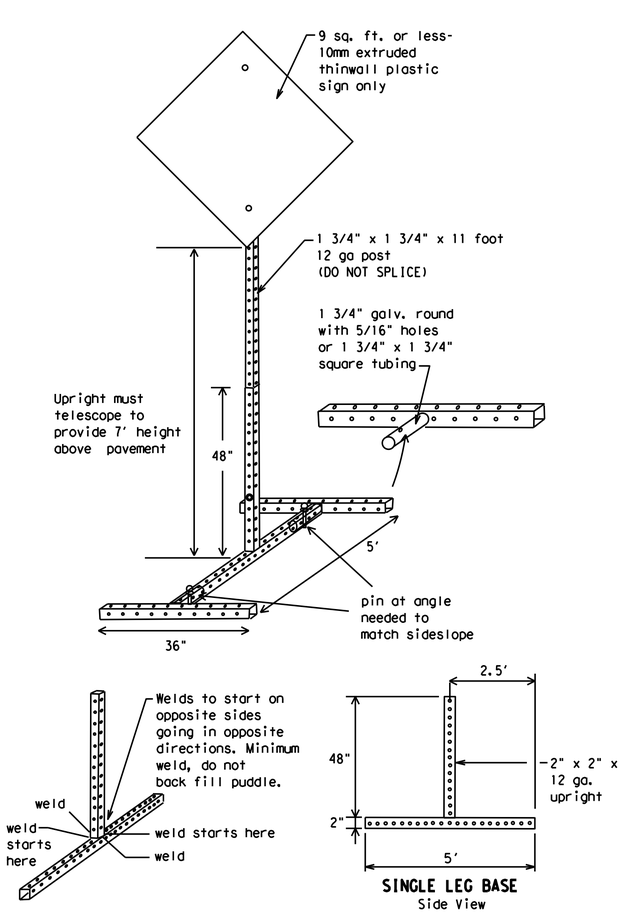

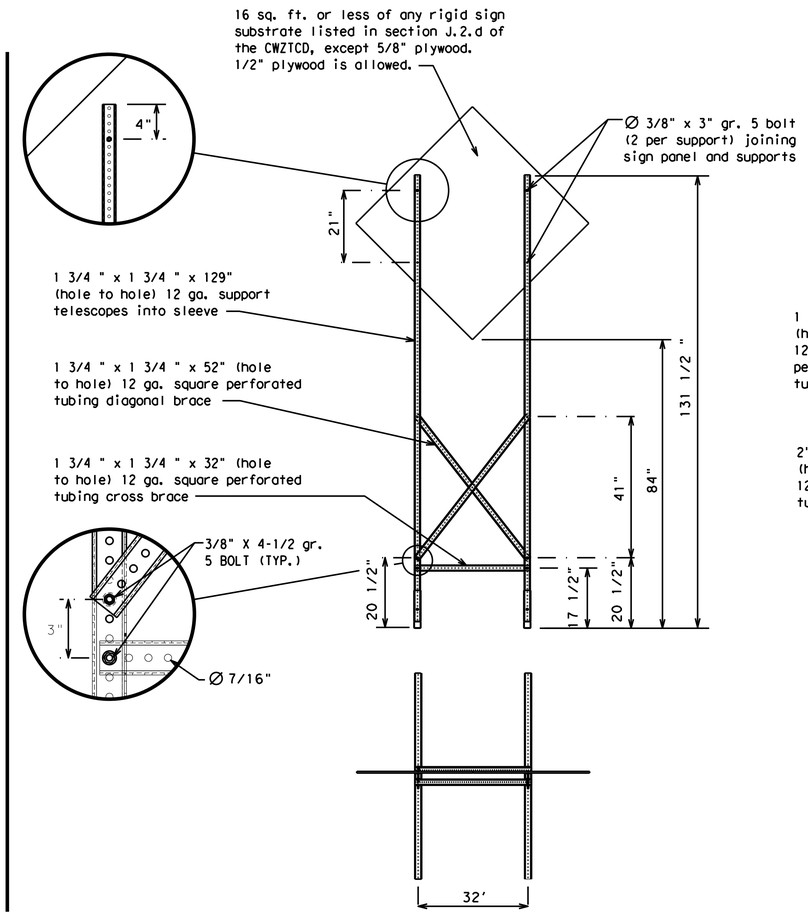

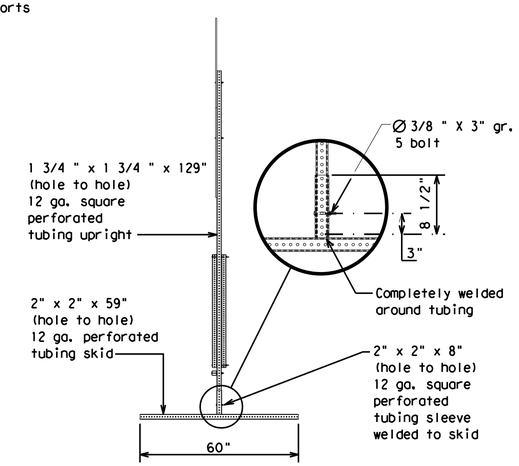

SKID MOUNTED PERFORATED SQUARE STEEL TUBING SIGN SUPPORTS

* LONG/INTERMEDIATE TERM STATIONARY - PORTABLE SKID MOUNTED SIGN SUPPORTS

WEDGE ANCHORS

Both steel and plastic Wedge Anchor Systems as shown on the SMD Standard Sheets may be used as temporary sign supports for signs up to 10 square feet of sign face. They may be set in concrete or in sturdy soils if approved by the Engineer. (See web address for "Traffic Engineering Standard Sheets" on BC(1)).

OTHER DESIGNS

MORE DETAILS OF APPROVED LONG/INTERMEDIATE AND SHORT TERM SUPPORTS CAN BE FOUND ON THE CWZTCD LIST. SEE BC(1) FOR WEBSITE LOCATION.

GENERAL NOTES

1. Nails may be used in the assembly of wooden sign supports, but 3/8" bolts with nuts or 3/8" x 3 1/2" lag screws must be used on every joint for final connection.
2. No more than 2 sign posts shall be placed within a 7 ft. circle, except for specific materials noted on the CWZTCD List.
3. When project is completed, all sign supports and foundations shall be removed from the project site. This will be considered subsidiary to Item 502.

* See BC(4) for definition of "Work Duration."

** Wood sign posts MUST be one piece. Splicing will NOT be allowed. Posts shall be painted white.

☐ See the CWZTCD for the type of sign substrate that can be used for each approved sign support.

Texas Department of Transportation — Traffic Safety Division Standard

BARRICADE AND CONSTRUCTION TYPICAL SIGN SUPPORT

BC(5)-21

FILE: bc-21.dgn	DN: TxDOT	CK: TxDOT	DW: TxDOT	CK: TxDOT
© TxDOT November 2002	CONT	SECT	JOB	HIGHWAY
REVISIONS				
9-07 8-14	DIST	COUNTY		SHEET NO.
7-13 5-21				31

DISCLAIMER:
The use of this standard is governed by the "Texas Engineering Practice Act". No warranty of any kind is made by TxDOT for any purpose whatsoever. TxDOT assumes no responsibility for the conversion of this standard to other formats or for incorrect results or damages resulting from its use.

DATE:
FILE:

WHEN NOT IN USE, REMOVE THE PCMS FROM THE RIGHT-OF-WAY OR PLACE THE PCMS BEHIND BARRIER OR GUARDRAIL WITH SIGN PANEL TURNED PARALLEL TO TRAFFIC

PORTABLE CHANGEABLE MESSAGE SIGNS

1. The Engineer/Inspector shall approve all messages used on portable changeable message signs (PCMS).
2. Messages on PCMS should contain no more than 8 words (about four to eight characters per word), not including simple words such as "TO," "FOR," "AT," etc.
3. Messages should consist of a single phase, or two phases that alternate. Three-phase messages are not allowed. Each phase of the message should convey a single thought, and must be understood by itself.
4. Use the word "EXIT" to refer to an exit ramp on a freeway; i.e., "EXIT CLOSED." Do not use the term "RAMP."
5. Always use the route or interstate designation (IH, US, SH, FM) along with the number when referring to a roadway.
6. When in use, the bottom of a stationary PCMS message panel should be a minimum 7 feet above the roadway, where possible.
7. The message term "WEEKEND" should be used only if the work is to start on Saturday morning and end by Sunday evening at midnight. Actual days and hours of work should be displayed on the PCMS if work is to begin on Friday evening and/or continue into Monday morning.
8. The Engineer/Inspector may select one of two options which are available for displaying a two-phase message on a PCMS. Each phase may be displayed for either four seconds each or for three seconds each.
9. Do not "flash" messages or words included in a message. The message should be steady burn or continuous while displayed.
10. Do not present redundant information on a two-phase message; i.e., keeping two lines of the message the same and changing the third line.
11. Do not use the word "Danger" in message.
12. Do not display the message "LANES SHIFT LEFT" or "LANES SHIFT RIGHT" on a PCMS. Drivers do not understand the message.
13. Do not display messages that scroll horizontally or vertically across the face of the sign.
14. The following table lists abbreviated words and two-word phrases that are acceptable for use on a PCMS. Both words in a phrase must be displayed together. Words or phrases not on this list should not be abbreviated, unless shown in the TMUTCD.
15. PCMS character height should be at least 18 inches for trailer mounted units. They should be visible from at least 1/2 (.5) mile and the text should be legible from at least 600 feet at night and 800 feet in daylight. Truck mounted units must have a character height of 10 inches and must be legible from at least 400 feet.
16. Each line of text should be centered on the message board rather than left or right justified.
17. If disabled, the PCMS should default to an illegible display that will not alarm motorists and will only be used to alert workers that the PCMS has malfunctioned. A pattern such as a series of horizontal solid bars is appropriate.

WORD OR PHRASE	ABBREVIATION
Access Road	ACCS RD
Alternate	ALT
Avenue	AVE
Best Route	BEST RTE
Boulevard	BLVD
Bridge	BRDG
Cannot	CANT
Center	CTR
Construction Ahead	CONST AHD
CROSSING	XING
Detour Route	DETOUR RTE
Do Not	DONT
East	E
Eastbound	(route) E
Emergency	EMER
Emergency Vehicle	EMER VEH
Entrance, Enter	ENT
Express Lane	EXP LN
Expressway	EXPWY
XXXX Feet	XXXX FT
Fog Ahead	FOG AHD
Freeway	FRWY, FWY
Freeway Blocked	FWY BLKD
Friday	FRI
Hazardous Driving	HAZ DRIVING
Hazardous Material	HAZMAT
High-Occupancy	HOV
Vehicle Highway	HWY
Hour(s)	HR, HRS
Information	INFO
It Is	ITS
Junction	JCT
Left	LFT
Left Lane	LFT LN
Lane Closed	LN CLOSED
Lower Level	LWR LEVEL
Maintenance	MAINT

WORD OR PHRASE	ABBREVIATION
Major	MAJ
Miles	MI
Miles Per Hour	MPH
Minor	MNR
Monday	MON
Normal	NORM
North	N
Northbound	(route) N
Parking	PKING
Road	RD
Right Lane	RT LN
Saturday	SAT
Service Road	SERV RD
Shoulder	SHLDR
Slippery	SLIP
South	S
Southbound	(route) S
Speed	SPD
Street	ST
Sunday	SUN
Telephone	PHONE
Temporary	TEMP
Thursday	THURS
To Downtown	TO DWNTN
Traffic	TRAF
Travelers	TRVLRS
Tuesday	TUES
Time Minutes	TIME MIN
Upper Level	UPR LEVEL
Vehicles (s)	VEH, VEHS
Warning	WARN
Wednesday	WED
Weight Limit	WT LIMIT
West	W
Westbound	(route) W
Wet Pavement	WET PVMT
Will Not	WONT

Roadway designation # IH-number, US-number, SH-number, FM-number

RECOMMENDED PHASES AND FORMATS FOR PCMS MESSAGES DURING ROADWORK ACTIVITIES

(The Engineer may approve other messages not specifically covered here.)

Phase 1: Condition Lists

Road/Lane/Ramp Closure List

FREEWAY CLOSED X MILE	FRONTAGE ROAD CLOSED
ROAD CLOSED AT SH XXX	SHOULDER CLOSED XXX FT
ROAD CLSD AT FM XXXX	RIGHT LN CLOSED XXX FT
RIGHT X LANES CLOSED	RIGHT X LANES OPEN
CENTER LANE CLOSED	DAYTIME LANE CLOSURES
NIGHT LANE CLOSURES	I-XX SOUTH EXIT CLOSED
VARIOUS LANES CLOSED	EXIT XXX CLOSED X MILE
EXIT CLOSED	RIGHT LN TO BE CLOSED
MALL DRIVEWAY CLOSED	X LANES CLOSED TUE - FRI
XXXXXXXX BLVD CLOSED	

Other Condition List

ROADWORK XXX FT	ROAD REPAIRS XXXX FT
FLAGGER XXXX FT	LANE NARROWS XXXX FT
RIGHT LN NARROWS XXXX FT	TWO-WAY TRAFFIC XX MILE
MERGING TRAFFIC XXXX FT	CONST TRAFFIC XXX FT
LOOSE GRAVEL XXXX FT	UNEVEN LANES XXXX FT
DETOUR X MILE	ROUGH ROAD XXXX FT
ROADWORK PAST SH XXXX	ROADWORK NEXT FRI-SUN
BUMP XXXX FT	US XXX EXIT X MILES
TRAFFIC SIGNAL XXXX FT	LANES SHIFT *

* LANES SHIFT in Phase 1 must be used with STAY IN LANE in Phase 2.

Phase 2: Possible Component Lists

Action to Take/Effect on Travel List

MERGE RIGHT	FORM X LINES RIGHT
DETOUR NEXT X EXITS	USE XXXXX RD EXIT
USE EXIT XXX	USE EXIT I-XX NORTH
STAY ON US XXX SOUTH	USE I-XX E TO I-XX N
TRUCKS USE US XXX N	WATCH FOR TRUCKS
WATCH FOR TRUCKS	EXPECT DELAYS
EXPECT DELAYS	PREPARE TO STOP
REDUCE SPEED XXX FT	END SHOULDER USE
USE OTHER ROUTES	WATCH FOR WORKERS
STAY IN LANE *	

Location List

AT FM XXXX
BEFORE RAILROAD CROSSING
NEXT X MILES
PAST US XXX EXIT
XXXXXXX TO XXXXXXX
US XXX TO FM XXXX

Warning List

SPEED LIMIT XX MPH
MAXIMUM SPEED XX MPH
MINIMUM SPEED XX MPH
ADVISORY SPEED XX MPH
RIGHT LANE EXIT
USE CAUTION
DRIVE SAFELY
DRIVE WITH CARE

** Advance Notice List

TUE-FRI XX AM- X PM
APR XX- XX X PM-X AM
BEGINS MONDAY
BEGINS MAY XX
MAY X-X XX PM - XX AM
NEXT FRI-SUN
XX AM TO XX PM
NEXT TUE AUG XX
TONIGHT XX PM- XX AM

** See Application Guidelines Note 6.

APPLICATION GUIDELINES

1. Only 1 or 2 phases are to be used on a PCMS.
2. The 1st phase (or both) should be selected from the "Road/Lane/Ramp Closure List" and the "Other Condition List".
3. A 2nd phase can be selected from the "Action to Take/Effect on Travel, Location, General Warning, or Advance Notice Phase Lists".
4. A Location Phase is necessary only if a distance or location is not included in the first phase selected.
5. If two PCMS are used in sequence, they must be separated by a minimum of 1000 ft. Each PCMS shall be limited to two phases, and should be understandable by themselves.
6. For advance notice, when the current date is within seven days of the actual work date, calendar days should be replaced with days of the week. Advance notification should typically be for no more than one week prior to the work.

WORDING ALTERNATIVES

1. The words RIGHT, LEFT and ALL can be interchanged as appropriate.
2. Roadway designations IH, US, SH, FM and LP can be interchanged as appropriate.
3. EAST, WEST, NORTH and SOUTH (or abbreviations E, W, N and S) can be interchanged as appropriate.
4. Highway names and numbers replaced as appropriate.
5. ROAD, HIGHWAY and FREEWAY can be interchanged as needed.
6. AHEAD may be used instead of distances if necessary.
7. FT and MI, MILE and MILES interchanged as appropriate.
8. AT, BEFORE and PAST interchanged as needed.
9. Distances or AHEAD can be eliminated from the message if a location phase is used.

PCMS SIGNS WITHIN THE R.O.W. SHALL BE BEHIND GUARDRAIL OR CONCRETE BARRIER OR SHALL HAVE A MINIMUM OF FOUR (4) PLASTIC DRUMS PLACED PERPENDICULAR TO TRAFFIC ON THE UPSTREAM SIDE OF THE PCMS, WHEN EXPOSED TO ONE DIRECTION OF TRAFFIC. WHEN EXPOSED TO TWO WAY TRAFFIC, THE FOUR DRUMS SHOULD BE PLACED WITH ONE DRUM AT EACH OF THE FOUR CORNERS OF THE UNIT.

FULL MATRIX PCMS SIGNS

1. When Full Matrix PCMS signs are used, the character height and legibility/visibility requirements shall be maintained as listed in Note 15 under "PORTABLE CHANGEABLE MESSAGE SIGNS" above.
2. When symbol signs, such as the "Flagger Symbol"(CW20-7) are represented graphically on the Full Matrix PCMS sign and, with the approval of the Engineer, it shall maintain the legibility/visibility requirement listed above.
3. When symbol signs are represented graphically on the Full Matrix PCMS, they shall only supplement the use of the static sign represented, and shall not substitute for, or replace that sign.
4. A full matrix PCMS may be used to simulate a flashing arrow board provided it meets the visibility, flash rate and dimming requirements on BC(7), for the same size arrow.

DISCLAIMER:
The use of this standard is governed by the "Texas Engineering Practice Act". No warranty of any kind is made by TxDOT for any purpose whatsoever. TxDOT assumes no responsibility for the conversion of this standard to other formats or for incorrect results or damages resulting from its use.

DATE:
FILE:

SHEET 6 OF 12

Texas Department of Transportation — Traffic Safety Division Standard

BARRICADE AND CONSTRUCTION PORTABLE CHANGEABLE MESSAGE SIGN (PCMS)

BC(6)-21

FILE: bc-21.dgn	DN: TxDOT	CK: TxDOT	DW: TxDOT	CK: TxDOT
©TxDOT November 2002	CONT	SECT	JOB	HIGHWAY
REVISIONS 9-07 8-14 7-13 5-21	DIST	COUNTY		SHEET NO. 32

100

DISCLAIMER:
The use of this standard is governed by the "Texas Engineering Practice Act". No warranty of any kind is made by TxDOT for any purpose whatsoever. TxDOT assumes no responsibility for the conversion of this standard to other formats or for incorrect results or damages resulting from its use.

1. Barrier Reflectors shall be pre-qualified, and conform to the color and reflectivity requirements of DMS-8600. A list of prequalified Barrier Reflectors can be found at the Material Producer List web address shown on BC(1).
2. Color of Barrier Reflectors shall be as specified in the TMUTCD. The cost of the reflectors shall be considered subsidiary to Item 512.

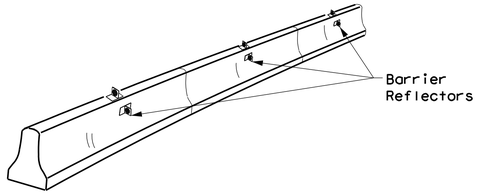

CONCRETE TRAFFIC BARRIER (CTB)

3. Where traffic is on one side of the CTB, two (2) Barrier Reflectors shall be mounted in approximately the midsection of each section of CTB. An alternate mounting location is uniformly spaced at one end of each CTB. This will allow for attachment of a barrier grapple without damaging the reflector. The Barrier Reflector mounted on the side of the CTB shall be located directly below the reflector mounted on top of the barrier, as shown in the detail above.
4. Where CTB separates two-way traffic, three barrier reflectors shall be mounted on each section of CTB. The reflector unit on top shall have two yellow reflective faces (Bi-Directional)while the reflectors on each side of the barrier shall have one yellow reflective face, as shown in the detail above.
5. When CTB separates traffic traveling in the same direction, no barrier reflectors will be required on top of the CTB.
6. Barrier Reflector units shall be yellow or white in color to match the edgeline being supplemented.
7. Maximum spacing of Barrier Reflectors is forty (40) feet.
8. Pavement markers or temporary flexible-reflective roadway marker tabs shall NOT be used as CTB delineation.
9. Attachment of Barrier Reflectors to CTB shall be per manufacturer's recommendations.
10. Missing or damaged Barrier Reflectors shall be replaced as directed by the Engineer.
11. Single slope barriers shall be delineated as shown on the above detail.

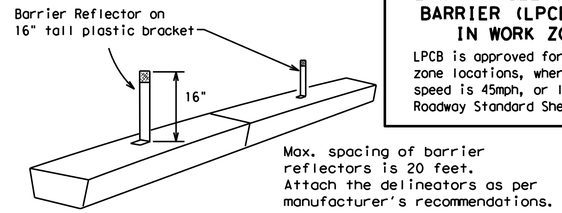

LOW PROFILE CONCRETE BARRIER (LPCB) USED IN WORK ZONES

LPCB is approved for use in work zone locations, where the posted speed is 45mph, or less. See Roadway Standard Sheet LPCB.

LOW PROFILE CONCRETE BARRIER (LPCB)

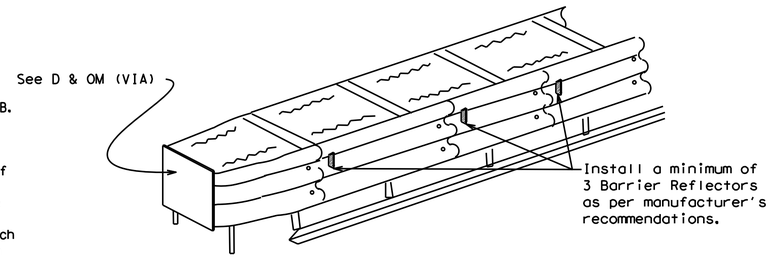

DELINEATION OF END TREATMENTS

END TREATMENTS FOR CTB'S USED IN WORK ZONES

End treatments used on CTB's in work zones shall meet the apppropriate crashworthy standards as defined in the Manual for Assessing Safety Hardware (MASH). Refer to the CWZTCD List for approved end treatments and manufacturers.

BARRIER REFLECTORS FOR CONCRETE TRAFFIC BARRIER AND ATTENUATORS

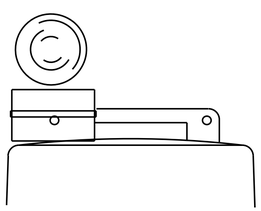

Type C Warning Light or approved substitute mounted on a drum adjacent to the travel way.

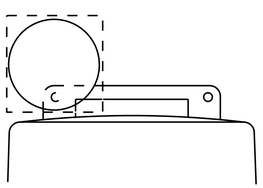

Warning reflector may be round or square.Must have a yellow reflective surface area of at least 30 square inches

WARNING LIGHTS

1. Warning lights shall meet the requirements of the TMUTCD.
2. Warning lights shall NOT be installed on barricades.
3. Type A-Low Intensity Flashing Warning Lights are commonly used with drums. They are intended to warn of or mark a potentially hazardous area. Their use shall be as indicated on this sheet and/or other sheets of the plans by the designation "FL". The Type A Warning Lights shall not be used with signs manufactured with Type B_{FL} or C_{FL} Sheeting meeting the requirements of Departmental Material Specification DMS-8300.
4. Type-C and Type D 360 degree Steady Burn Lights are intended to be used in a series for delineation to supplement other traffic control devices. Their use shall be as indicated on this sheet and/or other sheets of the plans by the designation "SB".
5. The Engineer/Inspector or the plans shall specify the location and type of warning lights to be installed on the traffic control devices.
6. When required by the Engineer, the Contractor shall furnish a copy of the warning lights certification. The warning light manufacturer will certify the warning lights meet the requirements of the latest ITE Purchase Specifications for Flashing and Steady-Burn Warning Lights.
7. When used to delineate curves, Type-C and Type D Steady Burn Lights should only be placed on the outside of the curve, not the inside.
8. The location of warning lights and warning reflectors on drums shall be as shown elsewhere in the plans.

WARNING LIGHTS MOUNTED ON PLASTIC DRUMS

1. Type A flashing warning lights are intended to warn drivers that they are approaching or are in a potentially hazardous area.
2. Type A random flashing warning lights are not intended for delineation and shall not be used in a series.
3. A series of sequential flashing warning lights placed on channelizing devices to form a merging taper may be used for delineation. If used, the successive flashing of the sequential warning lights should occur from the beginning of the taper to the end of the merging taper in order to identify the desired vehicle path. The rate of flashing for each light shall be 65 flashes per minute, plus or minus 10 flashes.
4. Type C and D steady-burn warning lights are intended to be used in a series to delineate the edge of the travel lane on detours, on lane changes, on lane closures, and on other similar conditions.
5. Type A, Type C and Type D warning lights shall be installed at locations as detailed on other sheets in the plans.
6. Warning lights shall not be installed on a drum that has a sign, chevron or vertical panel.
7. The maximum spacing for warning lights on drums should be identical to the channelizing device spacing.

WARNING REFLECTORS MOUNTED ON PLASTIC DRUMS AS A SUBSTITUTE FOR TYPE C (STEADY BURN) WARNING LIGHTS

1. A warning reflector or approved substitute may be mounted on a plastic drum as a substitute for a Type C, steady burn warning light at the discretion of the Contractor unless otherwise noted in the plans.
2. The warning reflector shall be yellow in color and shall be manufactured using a sign substrate approved for use with plastic drums listed on the CWZTCD.
3. The warning reflector shall have a minimum retroreflective surface area (one-side) of 30 square inches.
4. Round reflectors shall be fully reflectorized, including the area where attached to the drum.
5. Square substrates must have a minimum of 30 square inches of reflectorized sheeting. They do not have to be reflectorized where it attaches to the drum.
6. The side of the warning reflector facing approaching traffic shall have sheeting meeting the color and retroreflectivity requirements for DMS 8300-Type B or Type C.
7. When used near two-way traffic, both sides of the warning reflector shall be reflectorized.
8. The warning reflector should be mounted on the side of the handle nearest approaching traffic.
9. The maximum spacing for warning reflectors should be identical to the channelizing device spacing requirements.

Arrow Boards may be located behind channelizing devices in place for a shoulder taper or merging taper, otherwise they shall be delineated with four (4) channelizing devices placed perpendicular to traffic on the upstream side of traffic.

1. The Flashing Arrow Board should be used for all lane closures on multi-lane roadways, or slow moving maintenance or construction activities on the travel lanes.
2. Flashing Arrow Boards should not be used on two-lane, two-way roadways, detours, diversions or work on shoulders unless the "CAUTION" display (see detail below) is used.
3. The Engineer/Inspector shall choose all appropriate signs, barricades and/or other traffic control devices that should be used in conjunction with the Flashing Arrow Board.
4. The Flashing Arrow Board should be able to display the following symbols:

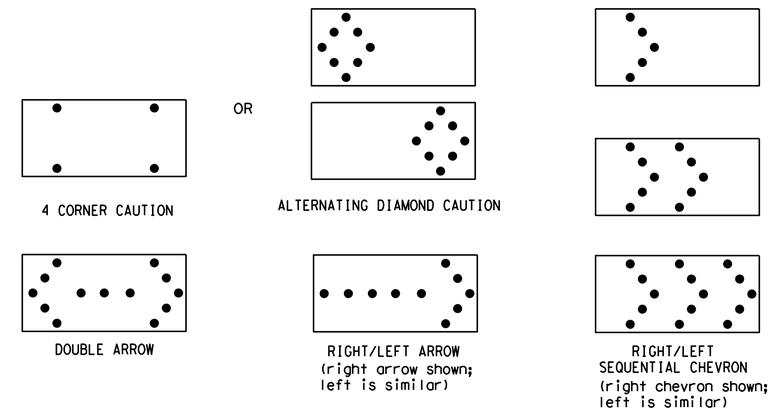

5. The "CAUTION" display consists of four corner lamps flashing simultaneously, or the Alternating Diamond Caution mode as shown.
6. The straight line caution display is NOT ALLOWED.
7. The Flashing Arrow Board shall be capable of minimum 50 percent dimming from rated lamp voltage. The flashing rate of the lamps shall not be less than 25 nor more than 40 flashes per minute.
8. Minimum lamp "on time" shall be approximately 50 percent for the flashing arrow and equal intervals of 25 percent for each sequential phase of the flashing chevron.
9. The sequential arrow display is NOT ALLOWED.
10. The flashing arrow display is the TxDOT standard; however, the sequential chevron display may be used during daylight operations.
11. The Flashing Arrow Board shall be mounted on a vehicle, trailer or other suitable support.
12. A Flashing Arrow Board SHALL NOT BE USED to laterally shift traffic.
13. A full matrix PCMS may be used to simulate a Flashing Arrow Board provided it meets visibility, flash rate and dimming requirements on this sheet for the same size arrow.
14. Minimum mounting height of trailer mounted Arrow Boards should be 7 feet from roadway to bottom of panel.

REQUIREMENTS

TYPE	MINIMUM SIZE	MINIMUM NUMBER OF PANEL LAMPS	MINIMUM VISIBILITY DISTANCE
B	30 x 60	13	3/4 mile
C	48 x 96	15	1 mile

ATTENTION

Flashing Arrow Boards shall be equipped with automatic dimming devices.

WHEN NOT IN USE, REMOVE THE ARROW BOARD FROM THE RIGHT-OF-WAY OR PLACE THE ARROW BOARD BEHIND CONCRETE TRAFFIC BARRIER OR GUARDRAIL.

FLASHING ARROW BOARDS

TRUCK-MOUNTED ATTENUATORS

1. Truck-mounted attenuators (TMA) used on TxDOT facilities must meet the requirements outlined in the Manual for Assessing Safety Hardware (MASH).
2. Refer to the CWZTCD for the requirements of Level 2 or Level 3 TMAs.
3. Refer to the CWZTCD for a list of approved TMAs.
4. TMAs are required on freeways unless otherwise noted in the plans.
5. A TMA should be used anytime that it can be positioned 30 to 100 feet in advance of the area of crew exposure without adversely affecting the work performance.
6. The only reason a TMA should not be required is when a work area is spread down the roadway and the work crew is an extended distance from the TMA.

Texas Department of Transportation — Traffic Safety Division Standard

BARRICADE AND CONSTRUCTION ARROW PANEL, REFLECTORS, WARNING LIGHTS & ATTENUATOR

BC(7)-21

FILE: bc-21.dgn	DN: TxDOT	CK: TxDOT	DW: TxDOT	CK: TxDOT
© TxDOT November 2002	CONT	SECT	JOB	HIGHWAY
REVISIONS 9-07 8-14, 7-13 5-21	DIST	COUNTY		SHEET NO. 33

DATE:
FILE:

101

DISCLAIMER:
The use of this standard is governed by the "Texas Engineering Practice Act". No warranty of any kind is made by TxDOT for any purpose whatsoever. TxDOT assumes no responsibility for the conversion of this standard to other formats or for incorrect results or damages resulting from its use.

GENERAL NOTES

1. For long term stationary work zones on freeways, drums shall be used as the primary channelizing device.
2. For intermediate term stationary work zones on freeways, drums should be used as the primary channelizing device but may be replaced in tangent sections by vertical panels, or 42" two-piece cones. In tangent sections, one-piece cones may be used with the approval of the Engineer but only if personnel are present on the project at all times to maintain the cones in proper position and location.
3. For short term stationary work zones on freeways, drums are the preferred channelizing device but may be replaced in tapers, transitions and tangent sections by vertical panels, two-piece cones or one-piece cones as approved by the Engineer.
4. Drums and all related items shall comply with the requirements of the current version of the "Texas Manual on Uniform Traffic Control Devices" (TMUTCD) and the "Compliant Work Zone Traffic Control Devices List" (CWZTCD).
5. Drums, bases, and related materials shall exhibit good workmanship and shall be free from objectionable marks or defects that would adversely affect their appearance or serviceability.
6. The Contractor shall have a maximum of 24 hours to replace any plastic drums identified for replacement by the Engineer/Inspector. The replacement device must be an approved device.

GENERAL DESIGN REQUIREMENTS

Pre-qualified plastic drums shall meet the following requirements:

1. Plastic drums shall be a two-piece design; the "body" of the drum shall be the top portion and the "base" shall be the bottom.
2. The body and base shall lock together in such a manner that the body separates from the base when impacted by a vehicle traveling at a speed of 20 MPH or greater but prevents accidental separation due to normal handling and/or air turbulence created by passing vehicles.
3. Plastic drums shall be constructed of lightweight flexible, and deformable materials. The Contractor shall NOT use metal drums or single piece plastic drums as channelization devices or sign supports.
4. Drums shall present a profile that is a minimum of 18 inches in width at the 36 inch height when viewed from any direction. The height of drum unit (body installed on base) shall be a minimum of 36 inches and a maximum of 42 inches.
5. The top of the drum shall have a built-in handle for easy pickup and shall be designed to drain water and not collect debris. The handle shall have a minimum of two widely spaced 9/16 inch diameter holes to allow attachment of a warning light, warning reflector unit or approved compliant sign.
6. The exterior of the drum body shall have a minimum of four alternating orange and white retroreflective circumferential stripes not less than 4 inches nor greater than 8 inches in width. Any non-reflectorized space between any two adjacent stripes shall not exceed 2 inches in width.
7. Bases shall have a maximum width of 36 inches, a maximum height of 4 inches, and a minimum of two footholds of sufficient size to allow base to be held down while separating the drum body from the base.
8. Plastic drums shall be constructed of ultra-violet stabilized, orange, high-density polyethylene (HDPE) or other approved material.
9. Drum body shall have a maximum unballasted weight of 11 lbs.
10. Drum and base shall be marked with manufacturer's name and model number.

RETROREFLECTIVE SHEETING

1. The stripes used on drums shall be constructed of sheeting meeting the color and retroreflectivity requirements of Departmental Materials Specification DMS-8300, "Sign Face Materials." Type A or Type B reflective sheeting shall be supplied unless otherwise specified in the plans.
2. The sheeting shall be suitable for use on and shall adhere to the drum surface such that, upon vehicular impact, the sheeting shall remain adhered in-place and exhibit no delaminating, cracking, or loss of retroreflectivity other than that loss due to abrasion of the sheeting surface.

BALLAST

1. Unballasted bases shall be large enough to hold up to 50 lbs. of sand. This base, when filled with the ballast material, should weigh between 35 lbs (minimum) and 50 lbs (maximum). The ballast may be sand in one to three sandbags separate from the base, sand in a sand-filled plastic base, or other ballasting devices as approved by the Engineer. Stacking of sandbags will be allowed, however height of sandbags above pavement surface may not exceed 12 inches.
2. Bases with built-in ballast shall weigh between 40 lbs. and 50 lbs. Built-in ballast can be constructed of an integral crumb rubber base or a solid rubber base.
3. Recycled truck tire sidewalls may be used for ballast on drums approved for this type of ballast on the CWZTCD list.
4. The ballast shall not be heavy objects, water, or any material that would become hazardous to motorists, pedestrians, or workers when the drum is struck by a vehicle.
5. When used in regions susceptible to freezing, drums shall have drainage holes in the bottoms so that water will not collect and freeze becoming a hazard when struck by a vehicle.
6. Ballast shall not be placed on top of drums.
7. Adhesives may be used to secure base of drums to pavement.

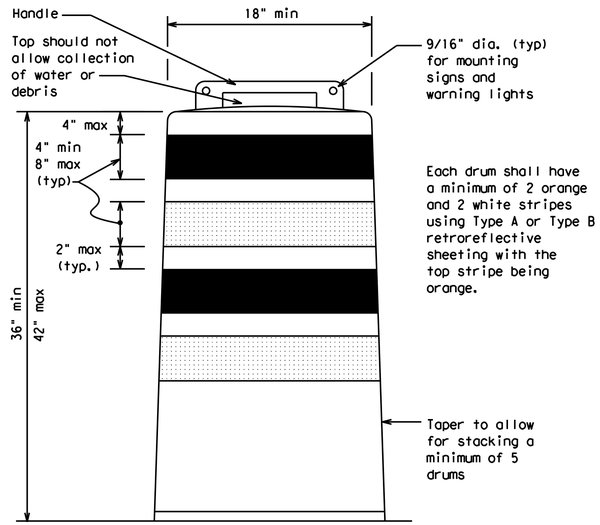

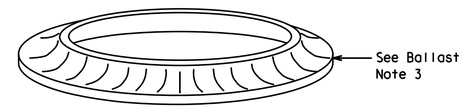

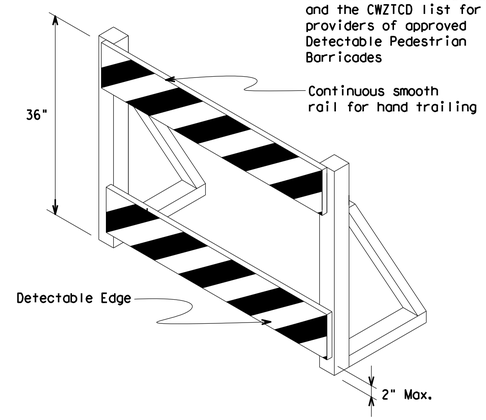

DETECTABLE PEDESTRIAN BARRICADES

1. When existing pedestrian facilities are disrupted, closed, or relocated in a TTC zone, the temporary facilities shall be detectable and include accessibility features consistent with the features present in the existing pedestrian facility. Refer to WZ(BTS-2) for Pedestrian Control requirements for Sidewalk Diversions, Sidewalk Detours and Crosswalk Closures.
2. Where pedestrians with visual disabilities normally use the closed sidewalk, a Detectable Pedestrian Barricade shall be placed across the full width of the closed sidewalk instead of a Type 3 Barricade.
3. Detectable pedestrian barricades similar to the one pictured above, longitudinal channelizing devices, some concrete barriers, and wood or chain link fencing with a continuous detectable edging can satisfactorily delineate a pedestrian path.
4. Tape, rope, or plastic chain strung between devices are not detectable, do not comply with the design standards in the "Americans with Disabilities Act Accessibility Guidelines (ADAAG)" and should not be used as a control for pedestrian movements.
5. Warning lights shall not be attached to detectable pedestrian barricades.
6. Detectable pedestrian barricades should use 8" nominal barricade rails as shown on BC(10) provided that the top rail provides a smooth continuous rail suitable for hand trailing with no splinters, burrs, or sharp edges.

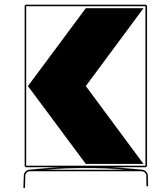

18" x 24" Sign
(Maximum Sign Dimension)
Chevron CW1-8, Opposing Traffic Lane Divider, Driveway sign D70a, Keep Right R4 series or other signs as approved by Engineer

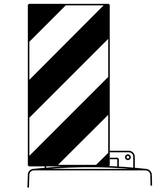

12" x 24"
Vertical Panel
mount with diagonals sloping down towards travel way

Plywood, Aluminum or Metal sign substrates shall NOT be used on plastic drums

SIGNS, CHEVRONS, AND VERTICAL PANELS MOUNTED ON PLASTIC DRUMS

1. Signs used on plastic drums shall be manufactured using substrates listed on the CWZTCD.
2. Chevrons and other work zone signs with an orange background shall be manufactured with Type B_{FL} or Type C_{FL} Orange sheeting meeting the color and retroreflectivity requirements of DMS-8300, "Sign Face Material," unless otherwise specified in the plans.
3. Vertical Panels shall be manufactured with orange and white sheeting meeting the requirements of DMS-8300 Type A or Type B. Diagonal stripes on Vertical Panels shall slope down toward the intended traveled lane.
4. Other sign messages (text or symbolic) may be used as approved by the Engineer. Sign dimensions shall not exceed 18 inches in width or 24 inches in height, except for the R9 series signs discussed in note 8 below.
5. Signs shall be installed using a 1/2 inch bolt (nominal) and nut, two washers, and one locking washer for each connection.
6. Mounting bolts and nuts shall be fully engaged and adequately torqued. Bolts should not extend more than 1/2 inch beyond nuts.
7. Chevrons may be placed on drums on the outside of curves, on merging tapers or on shifting tapers. When used in these locations, they may be placed on every drum or spaced not more than on every third drum. A minimum of three (3) should be used at each location called for in the plans.
8. R9-9, R9-10, R9-11 and R9-11a Sidewalk Closed signs which are 24 inches wide may be mounted on plastic drums, with approval of the Engineer.

Texas Department of Transportation — Traffic Safety Division Standard

BARRICADE AND CONSTRUCTION CHANNELIZING DEVICES

BC(8)-21

FILE: bc-21.dgn	DN: TxDOT	CK: TxDOT	DW: TxDOT	CK: TxDOT
© TxDOT November 2002	CONT	SECT	JOB	HIGHWAY
REVISIONS 4-03 8-14, 9-07 5-21, 7-13	DIST	COUNTY		SHEET NO. 34

DATE:
FILE: bc-21.dgn

DISCLAIMER:
The use of this standard is governed by the "Texas Engineering Practice Act". No warranty of any kind is made by TxDOT for any purpose whatsoever. TxDOT assumes no responsibility for the conversion of this standard to other formats or for incorrect results or damages resulting from its use.

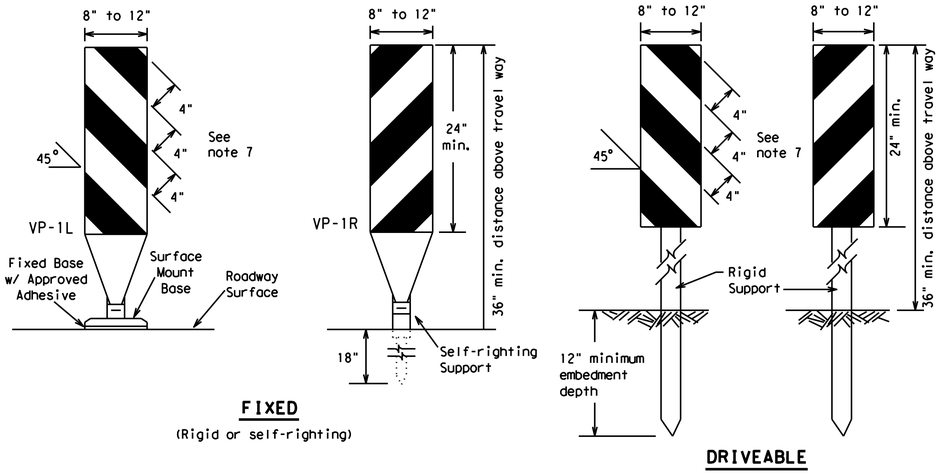

FIXED

(Rigid or self-righting)

DRIVEABLE

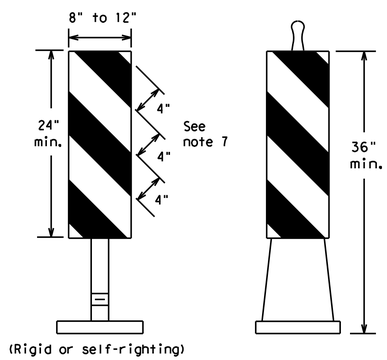

(Rigid or self-righting)

PORTABLE

1. Vertical Panels (VP's) are normally used to channelize traffic or divide opposing lanes of traffic.
2. VP's may be used in daytime or nighttime situations. They may be used at the edge of shoulder drop-offs and other areas such as lane transitions where positive daytime and nighttime delineation is required. The Engineer/Inspector shall refer to the Roadway Design Manual for additional requirements on the use VP's for drop-offs.
3. VP's should be mounted back to back if used at the edge of cuts adjacent to two-way two lane roadways. Stripes are to be reflective orange and reflective white and should always slope downward toward the travel lane.
4. VP's used on expressways and freeways or other high speed roadways, may have more than 270 square inches of retroreflective area facing traffic.
5. Self-righting supports are available with portable base. See "Compliant Work Zone Traffic Control Devices List" (CWZTCD).
6. Sheeting for the VP's shall be retroreflective Type A or Type B conforming to Departmental Material Specification DMS-8300, unless noted otherwise.
7. Where the height of reflective material on the vertical panel is 36 inches or greater, a panel stripe of 6 inches shall be used.

VERTICAL PANELS (VPs)

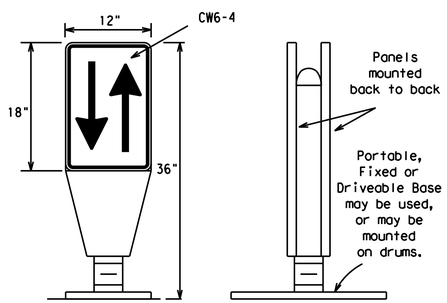

1. Opposing Traffic Lane Dividers (OTLD) are delineation devices designed to convert a normal one-way roadway section to two-way operation. OTLD's are used on temporary centerlines. The upward and downward arrows on the sign's face indicate the direction of traffic on either side of the divider. The base is secured to the pavement with an adhesive or rubber weight to minimize movement caused by a vehicle impact or wind gust.
2. The OTLD may be used in combination with 42" cones or VPs.
3. Spacing between the OTLD shall not exceed 500 feet. 42" cones or VPs placed between the OTLD's should not exceed 100 foot spacing.
4. The OTLD shall be orange with a black non-reflective legend. Sheeting for the OTLD shall be retroreflective Type B_{FL} or Type C_{FL} conforming to Departmental Material Specification DMS-8300, unless noted otherwise. The legend shall meet the requirements of DMS-8300.

OPPOSING TRAFFIC LANE DIVIDERS (OTLD)

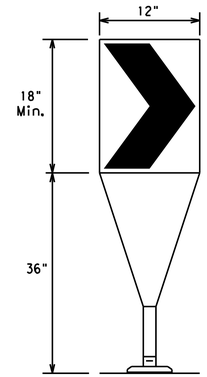

Fixed Base w/ Approved Adhesive (Driveable Base, or Flexible Support can be used)

1. The chevron shall be a vertical rectangle with a minimum size of 12 by 18 inches.
2. Chevrons are intended to give notice of a sharp change of alignment with the direction of travel and provide additional emphasis and guidance for vehicle operators with regard to changes in horizontal alignment of the roadway.
3. Chevrons, when used, shall be erected on the outside of a sharp curve or turn, or on the far side of an intersection. They shall be in line with and at right angles to approaching traffic. Spacing should be such that the motorist always has three in view, until the change in alignment eliminates its need.
4. To be effective, the chevron should be visible for at least 500 feet.
5. Chevrons shall be orange with a black nonreflective legend. Sheeting for the chevron shall be retroreflective Type B_{FL} or Type C_{FL} conforming to Departmental Material Specification DMS-8300, unless noted otherwise. The legend shall meet the requirements of DMS-8300.
6. For Long Term Stationary use on tapers or transitions on freeways and divided highways, self-righting chevrons may be used to supplement plastic drums but not to replace plastic drums.

CHEVRONS

GENERAL NOTES

1. Work Zone channelizing devices illustrated on this sheet may be installed in close proximity to traffic and are suitable for use on high or low speed roadways. The Engineer/Inspector shall ensure that spacing and placement is uniform and in accordance with the "Texas Manual on Uniform Traffic Control Devices" (TMUTCD).
2. Channelizing devices shown on this sheet may have a driveable, fixed or portable base. The requirement for self-righting channelizing devices must be specified in the General Notes or other plan sheets.
3. Channelizing devices on self-righting supports should be used in work zone areas where channelizing devices are frequently impacted by errant vehicles or vehicle related wind gusts making alignment of the channelizing devices difficult to maintain. Locations of these devices shall be detailed elsewhere in the plans. These devices shall conform to the TMUTCD and the "Compliant Work Zone Traffic Control Devices List" (CWZTCD).
4. The Contractor shall maintain devices in a clean condition and replace damaged, nonreflective, faded, or broken devices and bases as required by the Engineer/Inspector. The Contractor shall be required to maintain proper device spacing and alignment.
5. Portable bases shall be fabricated from virgin and/or recycled rubber. The portable bases shall weigh a minimum of 30 lbs.
6. Pavement surfaces shall be prepared in a manner that ensures proper bonding between the adhesives, the fixed mount bases and the pavement surface. Adhesives shall be prepared and applied according to the manufacturer's recommendations.
7. The installation and removal of channelizing devices shall not cause detrimental effects to the final pavement surfaces, including pavement surface discoloration or surface integrity. Driveable bases shall not be permitted on final pavement surfaces. The Engineer/Inspector shall approve all application and removal procedures of fixed bases.

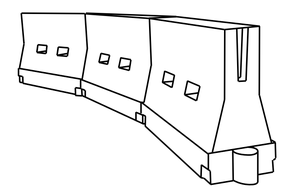

LONGITUDINAL CHANNELIZING DEVICES (LCD)

1. LCDs are crashworthy, lightweight, deformable devices that are highly visible, have good target value and can be connected together. They are not designed to contain or redirect a vehicle on impact.
2. LCDs may be used instead of a line of cones or drums.
3. LCDs shall be placed in accordance to application and installation requirements specific to the device, and used only when shown on the CWZTCD list.
4. LCDs should not be used to provide positive protection for obstacles, pedestrians or workers.
5. LCDs shall be supplemented with retroreflective delineation as required for temporary barriers on BC(7) when placed roughly parallel to the travel lanes.
6. LCDs used as barricades placed perpendicular to traffic should have at least one row of reflective sheeting meeting the requirements for barricade rails as shown on BC(10). Place reflective sheeting near the top of the LCD along the full length of the device.

WATER BALLASTED SYSTEMS USED AS BARRIERS

1. Water ballasted systems used as barriers shall not be used solely to channelize road users, but also to protect the work space per the appropriate Manual for Assessing Safety Hardware (MASH) crashworthiness requirements based on roadway speed and barrier application.
2. Water ballasted systems used to channelize vehicular traffic shall be supplemented with retroreflective delineation or channelizing devices to improve daytime/nighttime visibility. They may also be supplemented with pavement markings.
3. Water ballasted systems used as barriers shall be placed in accordance to application and installation requirements specific to the device, and used only when shown on the CWZTCD list.
4. Water ballasted systems used as barriers should not be used for a merging taper except in low speed (less than 45 MPH) urban areas. When used on a taper in a low speed urban area, the taper shall be delineated and the taper length should be designed to optimize road user operations considering the available geometric conditions.
5. When water ballasted systems used as barriers have blunt ends exposed to traffic, they should be attenuated as per manufacturer recommendations or flared to a point outside the clear zone.

If used to channelize pedestrians, longitudinal channelizing devices or water ballasted systems must have a continuous detectable bottom for users of long canes and the top of the unit shall not be less than 32 inches in height.

HOLLOW OR WATER BALLASTED SYSTEMS USED AS LONGITUDINAL CHANNELIZING DEVICES OR BARRIERS

Posted Speed	Formula	Minimum Desirable Taper Lengths **			Suggested Maximum Spacing of Channelizing Devices	
		10' Offset	11' Offset	12' Offset	On a Taper	On a Tangent
30	$L = \frac{WS^2}{60}$	150'	165'	180'	30'	60'
35		205'	225'	245'	35'	70'
40		265'	295'	320'	40'	80'
45	L = WS	450'	495'	540'	45'	90'
50		500'	550'	600'	50'	100'
55		550'	605'	660'	55'	110'
60		600'	660'	720'	60'	120'
65		650'	715'	780'	65'	130'
70		700'	770'	840'	70'	140'
75		750'	825'	900'	75'	150'
80		800'	880'	960'	80'	160'

** Taper lengths have been rounded off.
L=Length of Taper (FT.) W=Width of Offset (FT.)
S=Posted Speed (MPH)

SUGGESTED MAXIMUM SPACING OF CHANNELIZING DEVICES AND MINIMUM DESIRABLE TAPER LENGTHS

Texas Department of Transportation — Traffic Safety Division Standard

BARRICADE AND CONSTRUCTION CHANNELIZING DEVICES

BC(9)-21

FILE: bc-21.dgn	DN: TxDOT	CK: TxDOT	DW: TxDOT	CK: TxDOT
© TxDOT November 2002	CONT	SECT	JOB	HIGHWAY
REVISIONS 9-07 8-14 7-13 5-21	DIST		COUNTY	SHEET NO. 35

DATE:
FILE:

DISCLAIMER:
The use of this standard is governed by the "Texas Engineering Practice Act". No warranty of any kind is made by TxDOT for any purpose whatsoever. TxDOT assumes no responsibility for the conversion of this standard to other formats or for incorrect results or damages resulting from its use.

TYPE 3 BARRICADES

1. Refer to the Compliant Work Zone Traffic Control Devices List (CWZTCD) for details of the Type 3 Barricades and a list of all materials used in the construction of Type 3 Barricades.
2. Type 3 Barricades shall be used at each end of construction projects closed to all traffic.
3. Barricades extending across a roadway should have stripes that slope downward in the direction toward which traffic must turn in detouring. When both right and left turns are provided, the chevron striping may slope downward in both directions from the center of the barricade. Where no turns are provided at a closed road, striping should slope downward in both directions toward the center of roadway.
4. Striping of rails, for the right side of the roadway, should slope downward to the left. For the left side of the roadway, striping should slope downward to the right.
5. Identification markings may be shown only on the back of the barricade rails. The maximum height of letters and/or company logos used for identification shall be 1".
6. Barricades shall not be placed parallel to traffic unless an adequate clear zone is provided.
7. Warning lights shall NOT be installed on barricades.
8. Where barricades require the use of weights to keep from turning over, the use of sandbags with dry, cohesionless sand is recommended. The sandbags will be tied shut to keep the sand from spilling and to maintain a constant weight. Sand bags shall not be stacked in a manner that covers any portion of a barricade rails reflective sheeting. Rock, concrete, iron, steel or other solid objects will NOT be permitted. Sandbags should weigh a minimum of 35 lbs and a maximum of 50 lbs. Sandbags shall be made of a durable material that tears upon vehicular impact. Rubber (such as tire inner tubes) shall not be used for sandbags. Sandbags shall only be placed along or upon the base supports of the device and shall not be suspended above ground level or hung with rope, wire, chains or other fasteners.
9. Sheeting for barricades shall be retroreflective Type A or Type B conforming to Departmental Material Specification DMS-8300 unless otherwise noted.

Barricades shall NOT be used as a sign support.

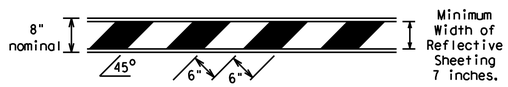

TYPICAL STRIPING DETAIL FOR BARRICADE RAIL

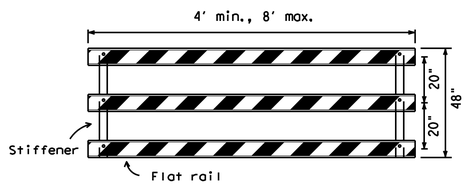

Stiffener may be inside or outside of support, but no more than 2 stiffeners shall be allowed on one barricade.

TYPICAL PANEL DETAIL FOR SKID OR POST TYPE BARRICADES

Each roadway of a divided highway shall be barricaded in the same manner.

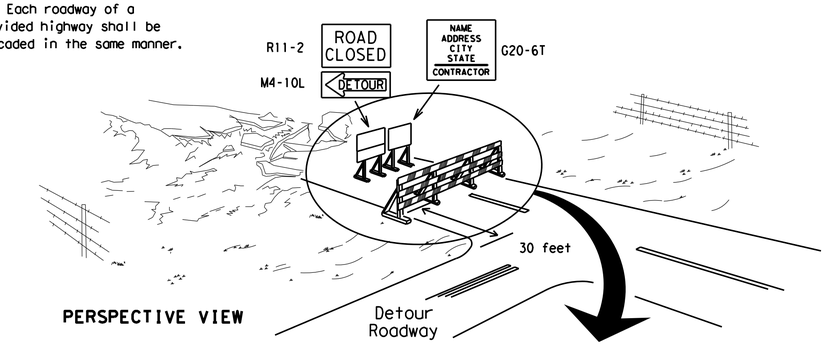

PERSPECTIVE VIEW

The three rails on Type 3 barricades shall be reflectorized orange and reflective white stripes on one side facing one-way traffic and both sides for two-way traffic.
Barricade striping should slant downward in the direction of detour.

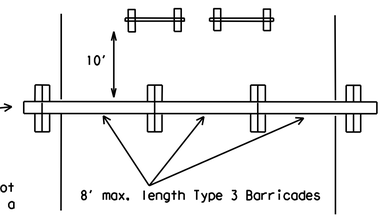

PLAN VIEW

1. Signs should be mounted on independent supports at a 7 foot mounting height in center of roadway. The signs should be a minimum of 10 feet behind Type 3 Barricades.
2. Advance signing shall be as specified elsewhere in the plans.

TYPE 3 BARRICADE (POST AND SKID) TYPICAL APPLICATION

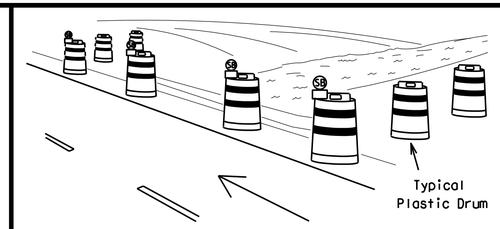

PERSPECTIVE VIEW

1. Where positive redirectional capability is provided, drums may be omitted.
2. Plastic construction fencing may be used with drums for safety as required in the plans.
3. Vertical Panels on flexible support may be substituted for drums when the shoulder width is less than 4 feet.
4. When the shoulder width is greater than 12 feet, steady-burn lights may be omitted if drums are used.
5. Drums must extend the length of the culvert widening.

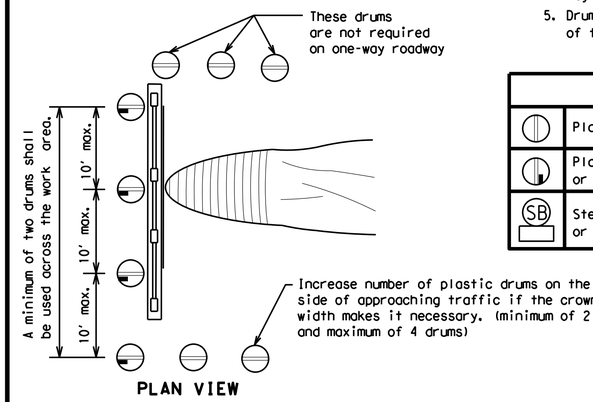

PLAN VIEW

LEGEND	
	Plastic drum
	Plastic drum with steady burn light or yellow warning reflector
SB	Steady burn warning light or yellow warning reflector

CULVERT WIDENING OR OTHER ISOLATED WORK WITHIN THE PROJECT LIMITS

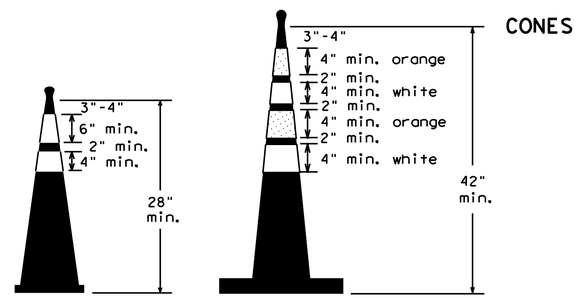

Two-Piece cones

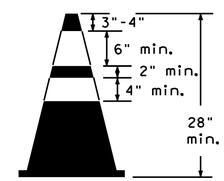

One-Piece cones

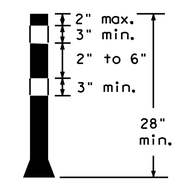

Tubular Marker

28" Cones shall have a minimum weight of 9 1/2 lbs.

42" 2-piece cones shall have a minimum weight of 30 lbs. including base.

1. Traffic cones and tubular markers shall be predominantly orange, and meet the height and weight requirements shown above.
2. One-piece cones have the body and base of the cone molded in one consolidated unit. Two-piece cones have a cone shaped body and a separate rubber base, or ballast, that is added to keep the device upright and in place.
3. Two-piece cones may have a handle or loop extending up to 8" above the minimum height shown, in order to aid in retrieving the device.
4. Cones or tubular markers shall have white or white and orange reflective bands as shown above. The reflective bands shall have a smooth, sealed outer surface and meet the requirements of Departmental Material Specification DMS-8300 Type A or Type B.
5. 28" cones and tubular markers are generally suitable for short duration and short-term stationary work as defined on BC(4). These should not be used for intermediate-term or long-term stationary work unless personnel is on-site to maintain them in their proper upright position.
6. 42" two-piece cones, vertical panels or drums are suitable for all work zone durations.
7. Cones or tubular markers used on each project should be of the same size and shape.

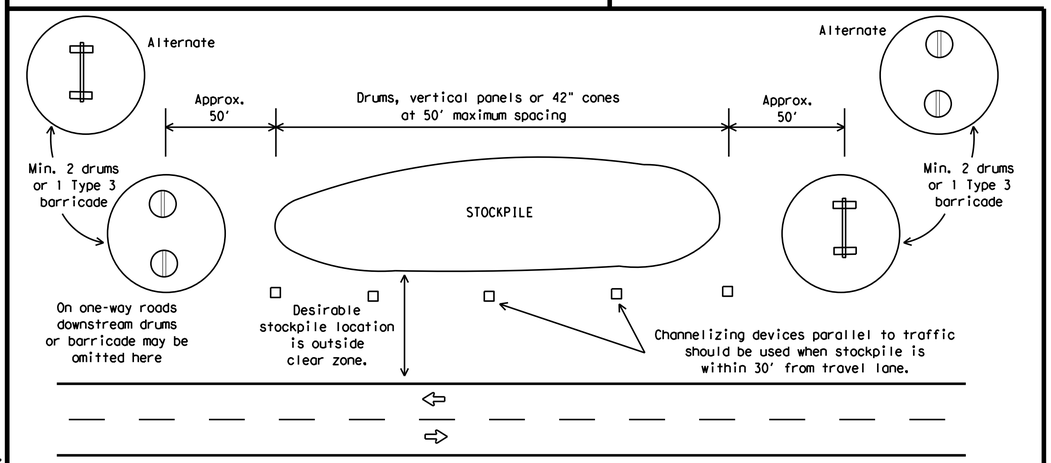

TRAFFIC CONTROL FOR MATERIAL STOCKPILES

SHEET 10 OF 12

Texas Department of Transportation — Traffic Safety Division Standard

BARRICADE AND CONSTRUCTION CHANNELIZING DEVICES

BC(10)-21

FILE: bc-21.dgn	DN: TxDOT	CK: TxDOT	DW: TxDOT	CK: TxDOT
© TxDOT November 2002	CONT	SECT	JOB	HIGHWAY
REVISIONS 9-07 8-14, 7-13 5-21	DIST		COUNTY	SHEET NO. 36

DATE:
FILE:

104

DISCLAIMER:
The use of this standard is governed by the "Texas Engineering Practice Act". No warranty of any kind is made by TxDOT for any purpose whatsoever. TxDOT assumes no responsibility for the conversion of this standard to other formats or for incorrect results or damages resulting from its use.

WORK ZONE PAVEMENT MARKINGS

GENERAL

1. The Contractor shall be responsible for maintaining work zone and existing pavement markings, in accordance with the standard specifications and special provisions, on all roadways open to traffic within the CSJ limits unless otherwise stated in the plans.
2. Color, patterns and dimensions shall be in conformance with the "Texas Manual on Uniform Traffic Control Devices" (TMUTCD).
3. Additional supplemental pavement marking details may be found in the plans or specifications.
4. Pavement markings shall be installed in accordance with the TMUTCD and as shown on the plans.
5. When short term markings are required on the plans, short term markings shall conform with the TMUTCD, the plans and details as shown on the Standard Plan Sheet WZ(STPM).
6. When standard pavement markings are not in place and the roadway is opened to traffic, DO NOT PASS signs shall be erected to mark the beginning of the sections where passing is prohibited and PASS WITH CARE signs at the beginning of sections where passing is permitted.
7. All work zone pavement markings shall be installed in accordance with Item 662, "Work Zone Pavement Markings."

RAISED PAVEMENT MARKERS

1. Raised pavement markers are to be placed according to the patterns on BC(12).
2. All raised pavement markers used for work zone markings shall meet the requirements of Item 672, "RAISED PAVEMENT MARKERS" and Departmental Material Specification DMS-4200 or DMS-4300.

PREFABRICATED PAVEMENT MARKINGS

1. Removable prefabricated pavement markings shall meet the requirements of DMS-8241.
2. Non-removable prefabricated pavement markings (foil back) shall meet the requirements of DMS-8240.

MAINTAINING WORK ZONE PAVEMENT MARKINGS

1. The Contractor will be responsible for maintaining work zone pavement markings within the work limits.
2. Work zone pavement markings shall be inspected in accordance with the frequency and reporting requirements of work zone traffic control device inspections as required by Form 599.
3. The markings should provide a visible reference for a minimum distance of 300 feet during normal daylight hours and 160 feet when illuminated by automobile low-beam headlights at night, unless sight distance is restricted by roadway geometrics.
4. Markings failing to meet this criteria within the first 30 days after placement shall be replaced at the expense of the Contractor as per Specification Item 662.

REMOVAL OF PAVEMENT MARKINGS

1. Pavement markings that are no longer applicable, could create confusion or direct a motorist toward or into the closed portion of the roadway shall be removed or obliterated before the roadway is opened to traffic.
2. The above shall not apply to detours in place for less than three days, where flaggers and/or sufficient channelizing devices are used in lieu of markings to outline the detour route.
3. Pavement markings shall be removed to the fullest extent possible, so as not to leave a discernable marking. This shall be by any method approved by TxDOT Specification Item 677 for "Eliminating Existing Pavement Markings and Markers".
4. The removal of pavement markings may require resurfacing or seal coating portions of the roadway as described in Item 677.
5. Subject to the approval of the Engineer, any method that proves to be successful on a particular type pavement may be used.
6. Blast cleaning may be used but will not be required unless specifically shown in the plans.
7. Over-painting of the markings SHALL NOT BE permitted.
8. Removal of raised pavement markers shall be as directed by the Engineer.
9. Removal of existing pavement markings and markers will be paid for directly in accordance with Item 677, "ELIMINATING EXISTING PAVEMENT MARKINGS AND MARKERS," unless otherwise stated in the plans.
10. Black-out marking tape may be used to cover conflicting existing markings for periods less than two weeks when approved by the Engineer.

Temporary Flexible-Reflective Roadway Marker Tabs

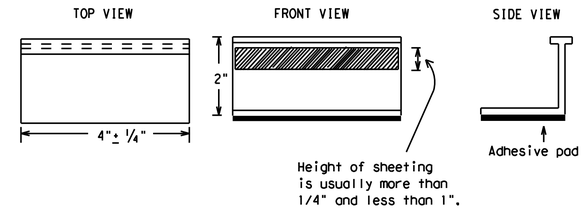

STAPLES OR NAILS SHALL NOT BE USED TO SECURE TEMPORARY FLEXIBLE-REFLECTIVE ROADWAY MARKER TABS TO THE PAVEMENT SURFACE

1. Temporary flexible-reflective roadway marker tabs used as guidemarks shall meet the requirements of DMS-8242.
2. Tabs detailed on this sheet are to be inspected and accepted by the Engineer or designated representative. Sampling and testing is not normally required, however at the option of the Engineer, either "A" or "B" below may be imposed to assure quality before placement on the roadway.
   A. Select five (5) or more tabs at random from each lot or shipment and submit to the Construction Division, Materials and Pavement Section to determine specification compliance.
   B. Select five (5) tabs and perform the following test. Affix five (5) tabs at 24 inch intervals on an asphaltic pavement in a straight line. Using a medium size passenger vehicle or pickup, run over the markers with the front and rear tires at a speed of 35 to 40 miles per hour, four (4) times in each direction. No more than one (1) out of the five (5) reflective surfaces shall be lost or displaced as a result of this test.
3. Small design variances may be noted between tab manufacturers.
4. See Standard Sheet WZ(STPM) for tab placement on new pavements. See Standard Sheet TCP(7-1) for tab placement on seal coat work.

RAISED PAVEMENT MARKERS USED AS GUIDEMARKS

1. Raised pavement markers used as guidemarks shall be from the approved product list, and meet the requirements of DMS-4200.
2. All temporary construction raised pavement markers provided on a project shall be of the same manufacturer.
3. Adhesive for guidemarks shall be bituminous material hot applied or butyl rubber pad for all surfaces, or thermoplastic for concrete surfaces.

Guidemarks shall be designated as:
YELLOW - (two amber reflective surfaces with yellow body).
WHITE - (one silver reflective surface with white body).

DEPARTMENTAL MATERIAL SPECIFICATIONS	
PAVEMENT MARKERS (REFLECTORIZED)	DMS-4200
TRAFFIC BUTTONS	DMS-4300
EPOXY AND ADHESIVES	DMS-6100
BITUMINOUS ADHESIVE FOR PAVEMENT MARKERS	DMS-6130
PERMANENT PREFABRICATED PAVEMENT MARKINGS	DMS-8240
TEMPORARY REMOVABLE, PREFABRICATED PAVEMENT MARKINGS	DMS-8241
TEMPORARY FLEXIBLE, REFLECTIVE ROADWAY MARKER TABS	DMS-8242

A list of prequalified reflective raised pavement markers, non-reflective traffic buttons, roadway marker tabs and other pavement markings can be found at the Material Producer List web address shown on BC(1).

Texas Department of Transportation — Traffic Safety Division Standard

BARRICADE AND CONSTRUCTION PAVEMENT MARKINGS

BC(11)-21

FILE: bc-21.dgn	DN: TxDOT	CK: TxDOT	DW: TxDOT	CK: TxDOT
© TxDOT February 1998	CONT	SECT	JOB	HIGHWAY
REVISIONS 2-98 9-07 5-21 1-02 7-13 11-02 8-14	DIST	COUNTY		SHEET NO. 37

105

DATE:
FILE:

PAVEMENT MARKING PATTERNS

REFLECTORIZED PAVEMENT MARKINGS - PATTERN A

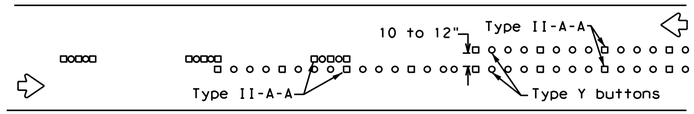

RAISED PAVEMENT MARKERS - PATTERN A

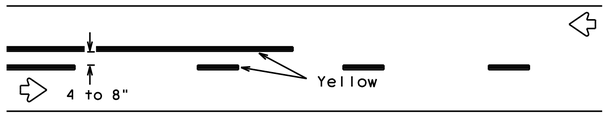

REFLECTORIZED PAVEMENT MARKINGS - PATTERN B

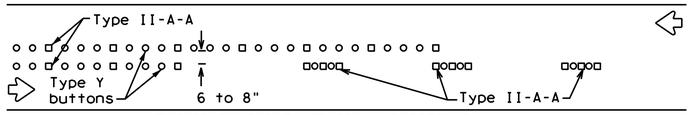

RAISED PAVEMENT MARKERS - PATTERN B

Pattern A is the TXDOT Standard, however Pattern B may be used if approved by the Engineer.
Prefabricated markings may be substituted for reflectorized pavement markings.

CENTER LINE & NO-PASSING ZONE BARRIER LINES FOR TWO-LANE, TWO-WAY HIGHWAYS

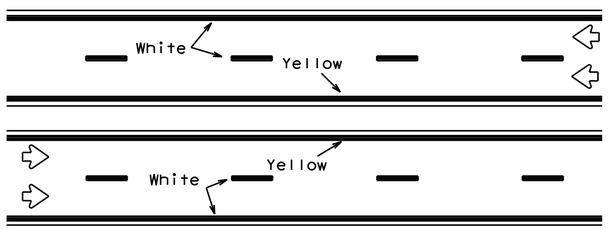

REFLECTORIZED PAVEMENT MARKINGS

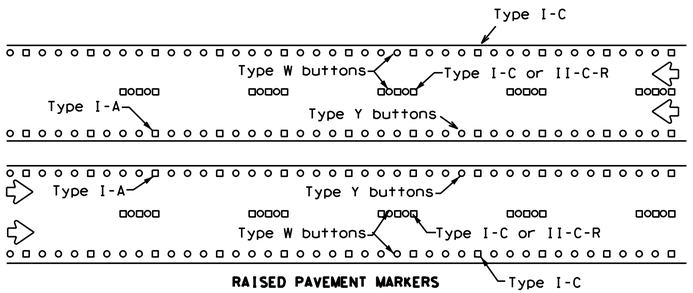

RAISED PAVEMENT MARKERS

Prefabricated markings may be substituted for reflectorized pavement markings.

EDGE & LANE LINES FOR DIVIDED HIGHWAY

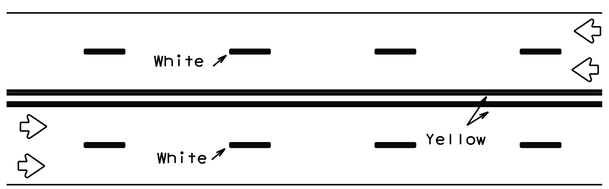

REFLECTORIZED PAVEMENT MARKINGS

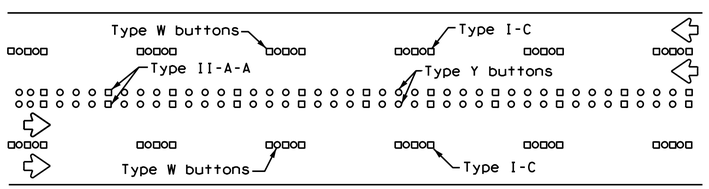

RAISED PAVEMENT MARKERS

Prefabricated markings may be substituted for reflectorized pavement markings.

LANE & CENTER LINES FOR MULTILANE UNDIVIDED HIGHWAYS

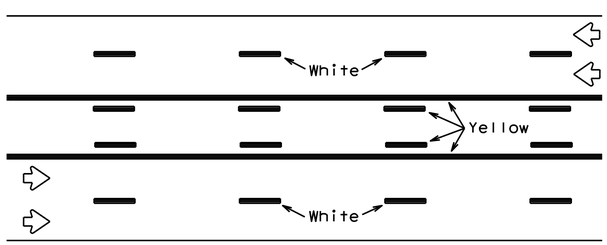

REFLECTORIZED PAVEMENT MARKINGS

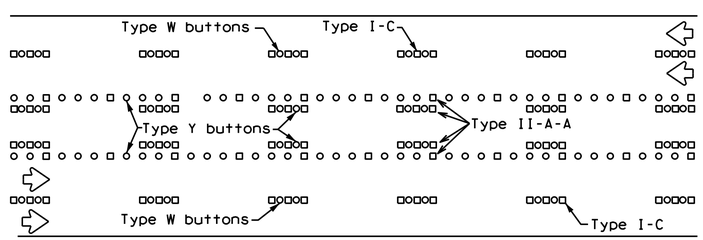

RAISED PAVEMENT MARKERS

Prefabricated markings may be substituted for reflectorized pavement markings.

TWO-WAY LEFT TURN LANE

STANDARD WORK ZONE PAVEMENT MARKINGS DETAILS

SOLID LINES

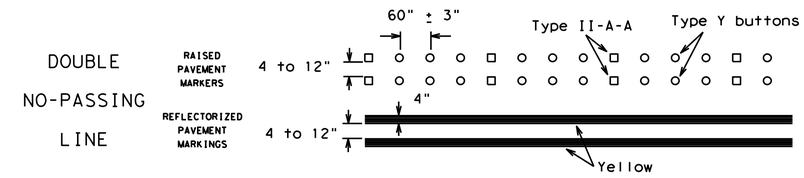

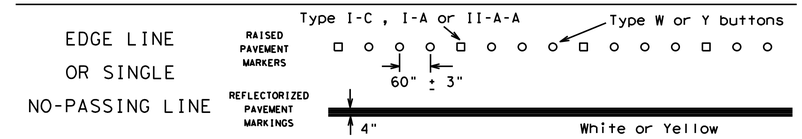

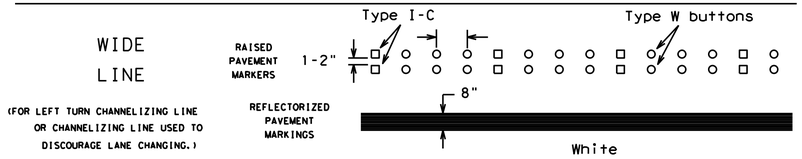

BROKEN LINES

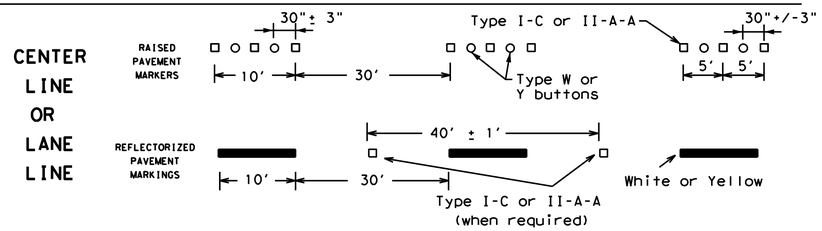

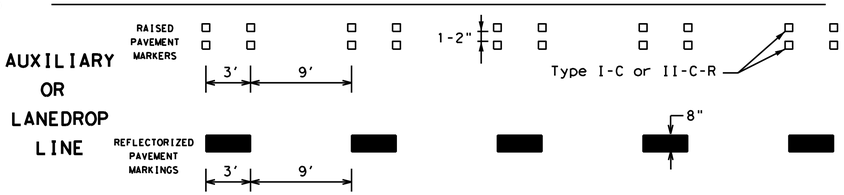

REMOVABLE MARKINGS WITH RAISED PAVEMENT MARKERS

If raised pavement markers are used to supplement REMOVABLE markings, the markers shall be applied to the top of the tape at the approximate mid length of tape used for broken lines or at 20 foot spacing for solid lines. This allows an easier removal of raised pavement markers and tape.

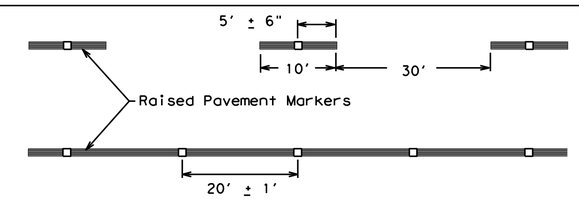

Centerline only - not to be used on edge lines

Raised pavement markers used as standard pavement markings shall be from the approved products list and meet the requirements of Item 672 "RAISED PAVEMENT MARKERS."

SHEET 12 OF 12

Texas Department of Transportation — Traffic Safety Division Standard

BARRICADE AND CONSTRUCTION PAVEMENT MARKING PATTERNS

BC(12)-21

FILE: bc-21.dgn	DN: TxDOT	CK: TxDOT	DW: TxDOT	CK: TxDOT
© TxDOT February 1998	CONT	SECT	JOB	HIGHWAY
REVISIONS 1-97 9-07 5-21 2-98 7-13 11-02 8-14	DIST		COUNTY	SHEET NO. 38

106

DISCLAIMER:
The use of this standard is governed by the "Texas Engineering Practice Act". No warranty of any kind is made by TxDOT for any purpose whatsoever. TxDOT assumes no responsibility for the conversion of this standard to other formats or for incorrect results or damages resulting from its use.

DATE:
FILE:

DISCLAIMER:
The use of this standard is governed by the "Texas Engineering Practice Act". No warranty of any kind is made by TxDOT for any purpose whatsoever. TxDOT assumes no responsibility for the conversion of this standard to other formats or for incorrect results or damages resulting from its use.

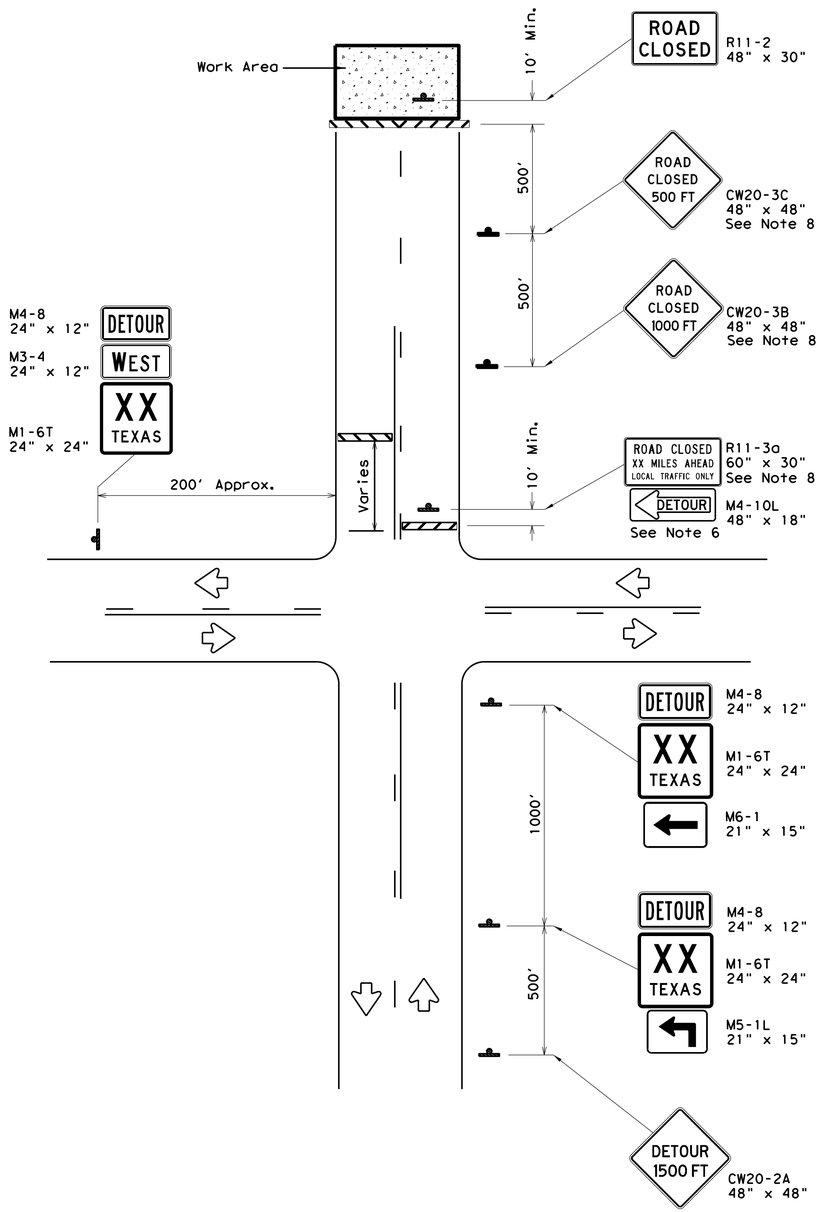

ROAD CLOSURE BEYOND THE INTERSECTION

Signing for a Numbered Route with an Off-Site Detour

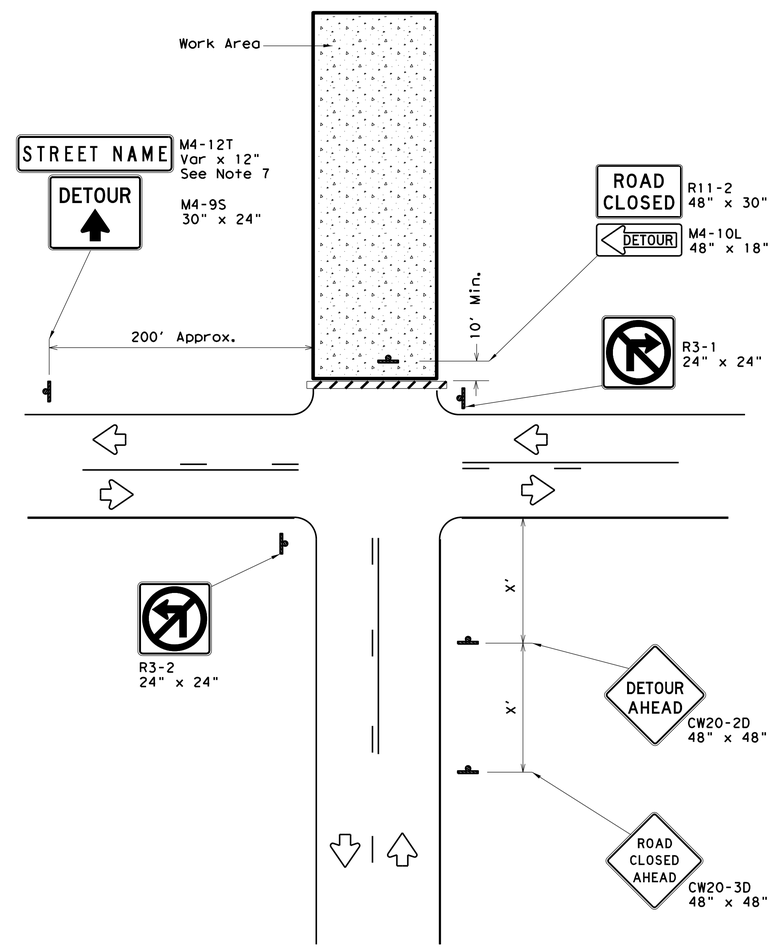

ROAD CLOSURE AT THE INTERSECTION

Signing for an Un-numbered Route with an Off-Site Detour

LEGEND	
	Type 3 Barricade
	Sign

Posted Speed *	Minimum Sign Spacing "X" Distance
30	120'
35	160'
40	240'
45	320'
50	400'
55	500'
60	600'
65	700'
70	800'
75	900'

* Conventional Roads Only

GENERAL NOTES

1. This sheet is intended to provide details for temporary work zone road closures. For permanent road closure details see the D&OM standards.
2. Barricades used shall meet the requirements shown on Barricade and Construction Standard BC(10) and listed on the Compliant Work Zone Traffic Control Devices list (CWZTCD).
3. Stockpiled materials shall not be placed on the traffic side of barricades.
4. Barricades at the road closure should extend from pavement edge to pavement edge.
5. Detour signing shown is intended to illustrate the type of signing that is appropriate for numbered routes or un-numbered routes as labeled. It does not indicate the full extent of detour signing required. Detour routes should be signed as shown elsewhere in the plans.
6. If the road is open for a significant distance beyond the intersection or there are significant origin/destination points beyond the intersection, the signs and barricades at this location should be located at the edge of the traveled way.
7. The Street Name (M4-12T) sign is to be placed above the DETOUR (M4-9S) sign.
8. For urban areas where there is a shorter distance between the intersection and the actual closure location, the ROAD CLOSED XX MILES AHEAD (R11-3a) sign may be replaced with a ROAD CLOSED TO THRU TRAFFIC (R11-4) sign. If adequate space does not exist between the intersection and the closure a single ROAD CLOSED AHEAD (CW20-3D) sign spaced as per the table above may replace the ROAD CLOSED 1000 FT (CW20-3B) and ROAD CLOSED 500 FT (CW20-3C) signs.
9. Signs and barricades shown shall be subsidiary to Item 502. Locations where these details will be required shall be as shown elsewhere in the plans.

Texas Department of Transportation

Traffic Operations Division Standard

WORK ZONE ROAD CLOSURE DETAILS

WZ(RCD)-13

FILE: wzrcd-13.dgn	DN: TxDOT	CK: TxDOT	DW: TxDOT	CK: TxDOT
© TxDOT August 1995	CONT	SECT	JOB	HIGHWAY
REVISIONS				
1-97 4-98 7-13	DIST		COUNTY	SHEET NO.
2-98 3-03				39

DATE:
FILE:

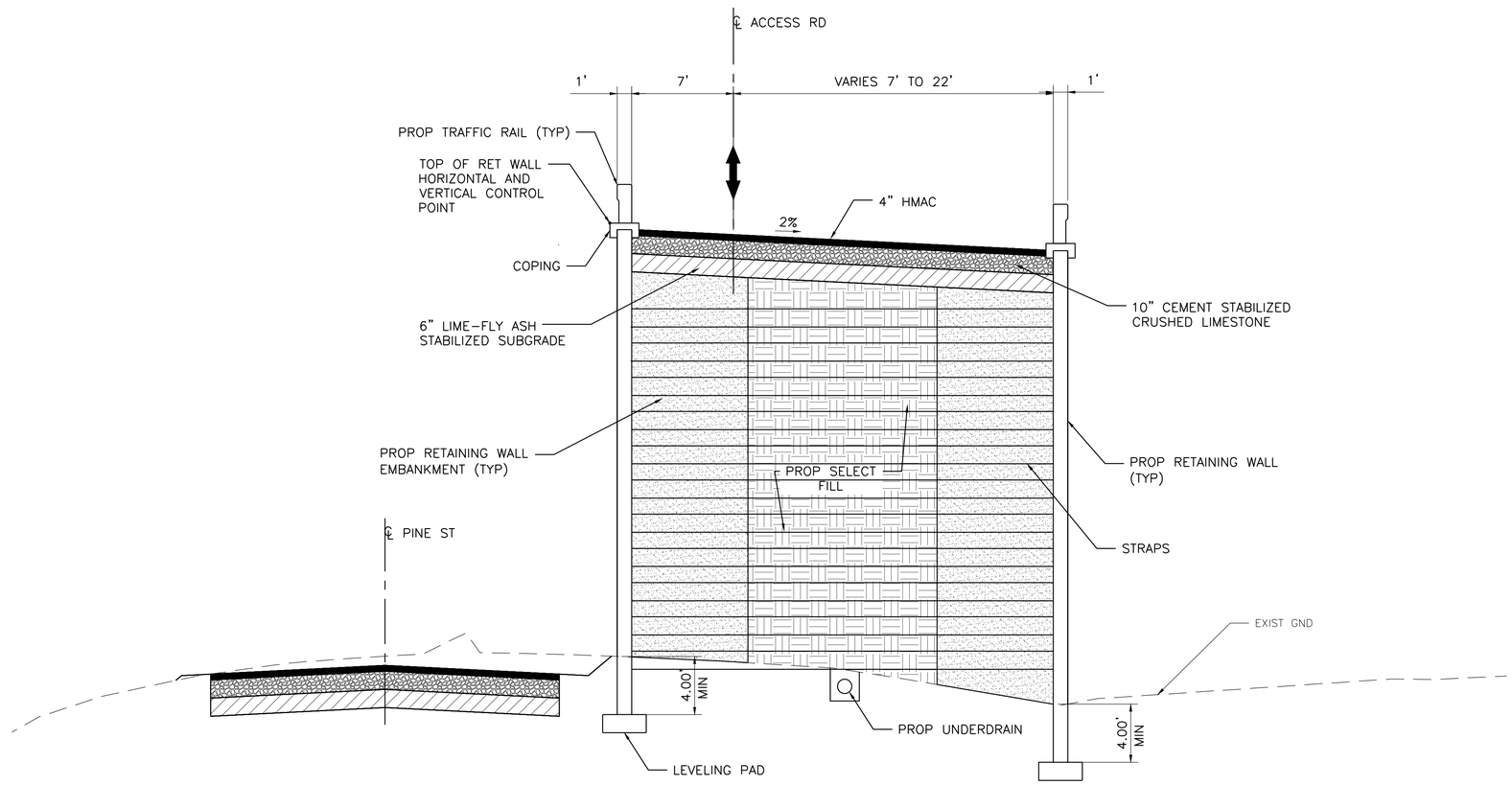

ACCESS ROAD
TYPICAL SECTION

ISSUED FOR BID

Freese and Nichols, Inc.
Texas Registered Engineering Firm F-2144

THE STATE OF TEXAS
SCOTT W. KIRBY
93651
LICENSED
PROFESSIONAL ENGINEER
1-10-2022

FREESE AND NICHOLS
10497 Town and Country Way, Suite 600
Houston, Texas 77024
Phone - (713) 600-6800
Web - www.freese.com

CITY OF BEAUMONT
COLLIER'S FERRY PUMP STATION

ACCESS RD
TYPICAL SECTION

NO.	ISSUE	BY	DATE

F&N JOB NO. BMT20326
DATE 01/07/2022
DESIGNED RNL
DRAWN RNL
REVISED
CHECKED SWK
FILE NAME CV-TYP SECTS-ALT 2.dwg

VERIFY SCALE 0 1
Bar is one inch on original drawing. If not one inch on this sheet, adjust scale.

SHEET C-26
SEQ. 40

ACAD Rel: 24.0s (LIMS Tech)
Filename: N:\IF\Drawings\3. Roadway\CV-TYP SECTS-ALT 2.dwg
Last Saved: 1/10/2022 11:19 AM Saved By: 03952

Plot Date: 1/10/2022 12:05 PM Plot By: 03952 Filename: N:\IF\Drawings\3. Roadway\CV-TYP SECTS-ALT 2.dwg

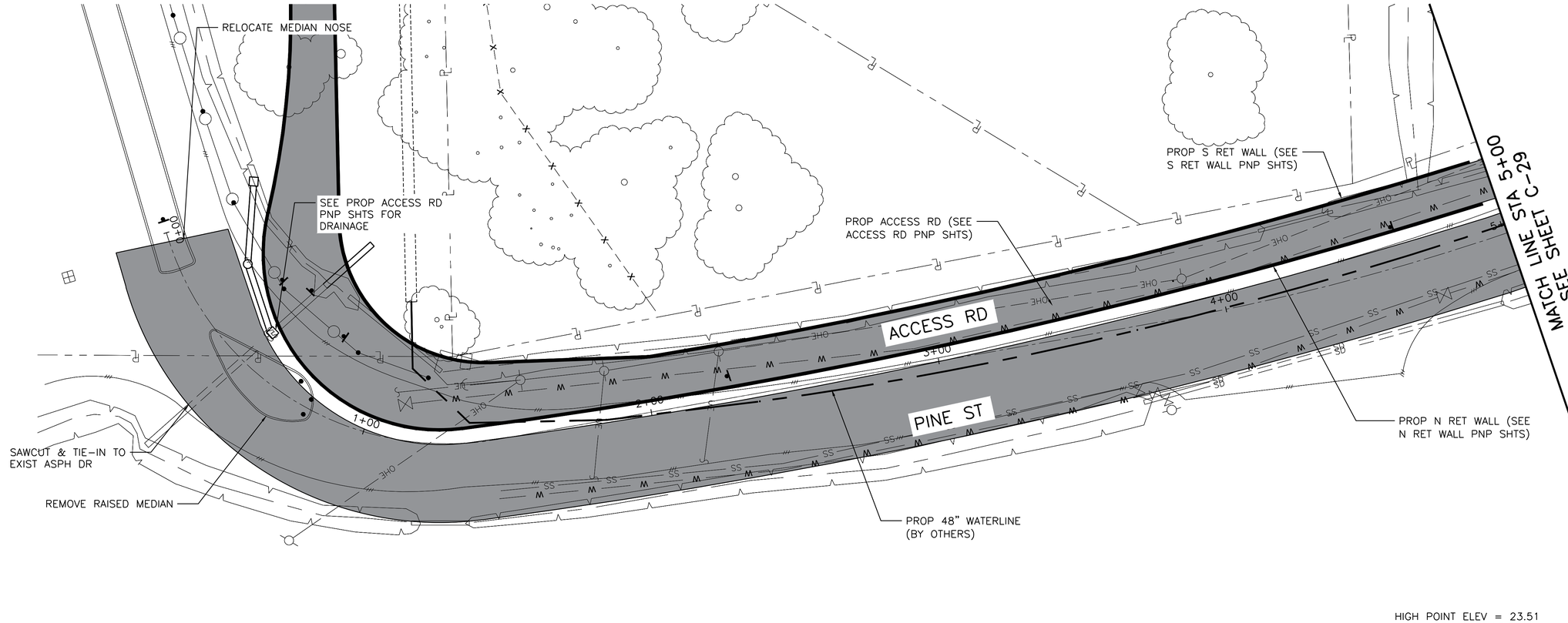

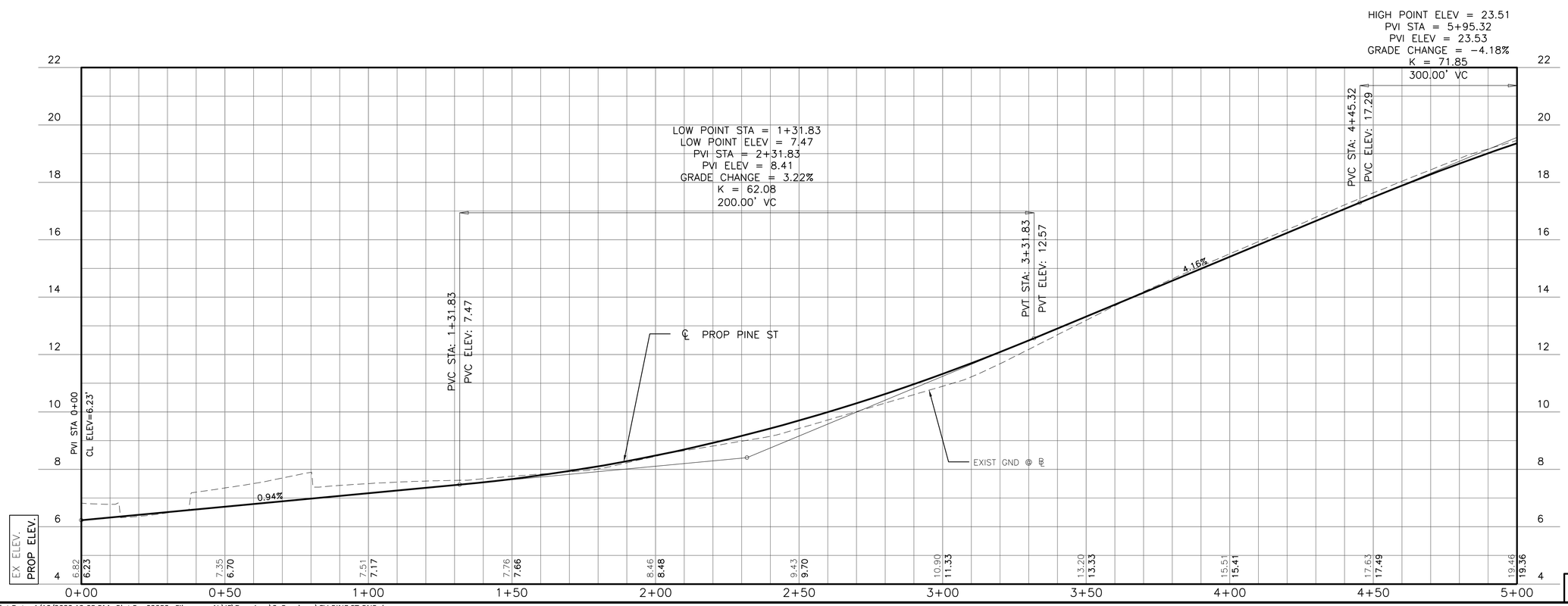

ISSUED FOR BID

Freese and Nichols, Inc.
Texas Registered Engineering Firm F-2144

STATE OF TEXAS
SCOTT W. KIRBY
93651
PROFESSIONAL ENGINEER
LICENSED
1-10-2022

FREESE AND NICHOLS
10497 Town and Country Way,
Suite 600
Houston, Texas 77024
Phone - (713) 600-6800
Web - www.freese.com

CITY OF BEAUMONT
COLLIER'S FERRY PUMP STATION

PINE ST PLAN AND PROFILE
STA 0+00 TO STA 5+00

NO.	ISSUE	BY	DATE

F&N JOB NO. BMT20326
DATE 01/07/2022
DESIGNED RNL
DRAWN RNL
REVISED
CHECKED SWK
FILE NAME CV-PINE ST-PNP.dwg

VERIFY SCALE 0 1
Bar is one inch on original drawing. If not one inch on this sheet, adjust scale.

SHEET C-27
SEQ. 41

ACAD Rel: 24.0s (LMS Tech)
Filename: N:\IF\Drawings\3. Roadway\CV-PINE ST-PNP.dwg
Last Saved: 1/6/2022 8:11 PM Saved By: 03952

Plot Date: 1/10/2022 12:05 PM Plot By: 03952 Filename: N:\IF\Drawings\3. Roadway\CV-PINE ST-PNP.dwg

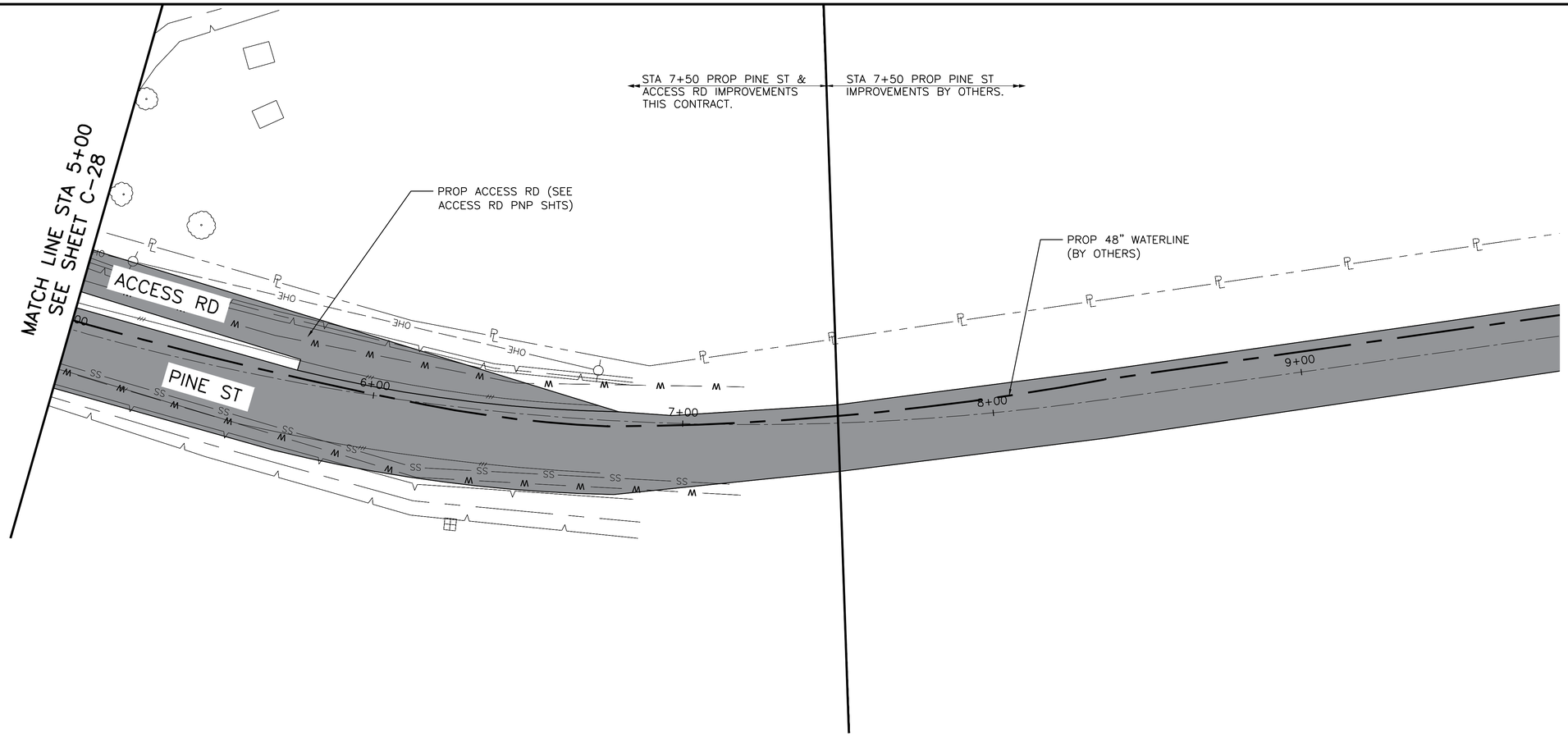

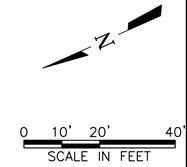

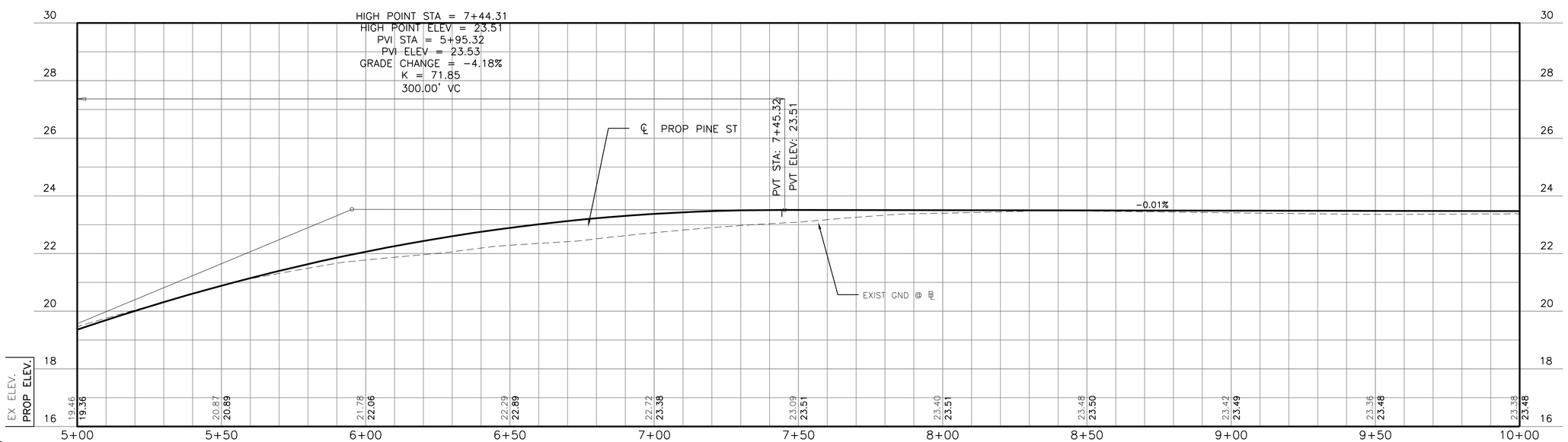

ISSUED FOR BID

Freese and Nichols, Inc.
Texas Registered Engineering Firm F-2144

STATE OF TEXAS
SCOTT W. KIRBY
93651
LICENSED
PROFESSIONAL ENGINEER
1-10-2022

FREESE AND NICHOLS
10497 Town and Country Way,
Suite 600
Houston, Texas 77024
Phone - (713) 600-6800
Web - www.freese.com

CITY OF BEAUMONT
COLLIER'S FERRY PUMP STATION

PINE ST PLAN AND PROFILE
STA 5+00.00 TO END

NO.	ISSUE	BY	DATE

F&N JOB NO. BMT20326
DATE 01/07/2022
DESIGNED RNL
DRAWN RNL
REVISED
CHECKED SWK
FILE NAME CV-PINE ST-PNP.dwg

VERIFY SCALE Bar is one inch on original drawing. If not one inch on this sheet, adjust scale.
0 1

SHEET C-28
SEQ. 42

ACAD Rel: 24.0s (LMS Tech)
Filename: N:\IF\Drawings\3. Roadway\CV-PINE ST-PNP.dwg
Last Saved: 1/6/2022 8:11 PM Saved By: 03952

Plot Date: 1/10/2022 12:05 PM Plot By: 03952 Filename: N:\IF\Drawings\3. Roadway\CV-PINE ST-PNP.dwg

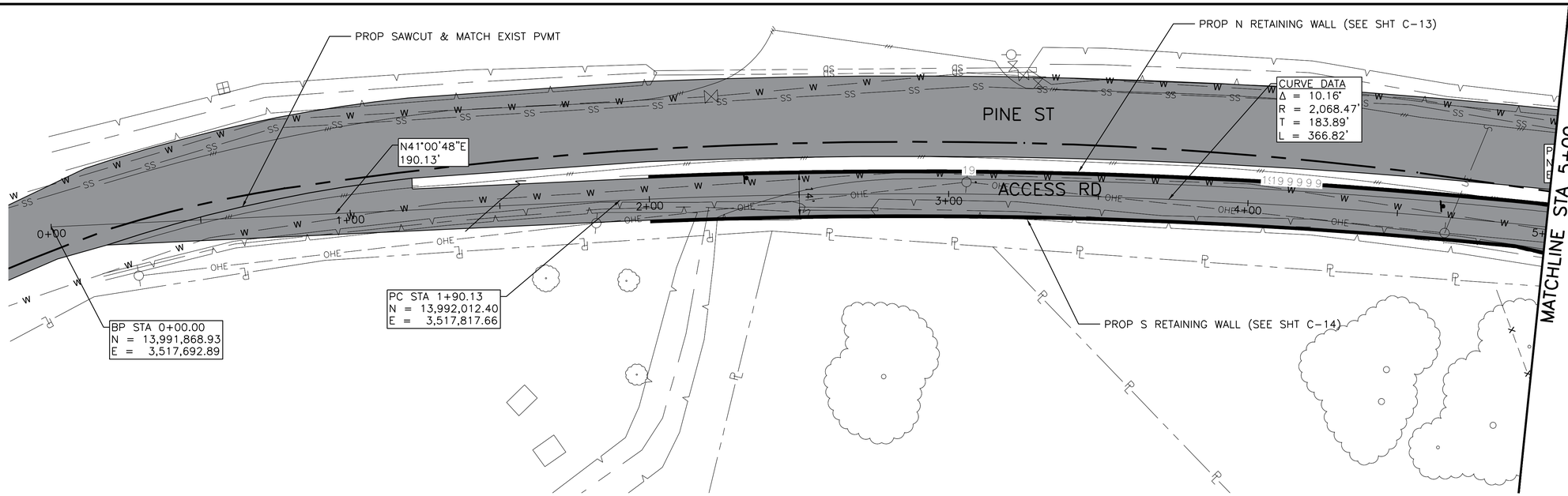

N

0 10' 20' 40'
SCALE IN FEET

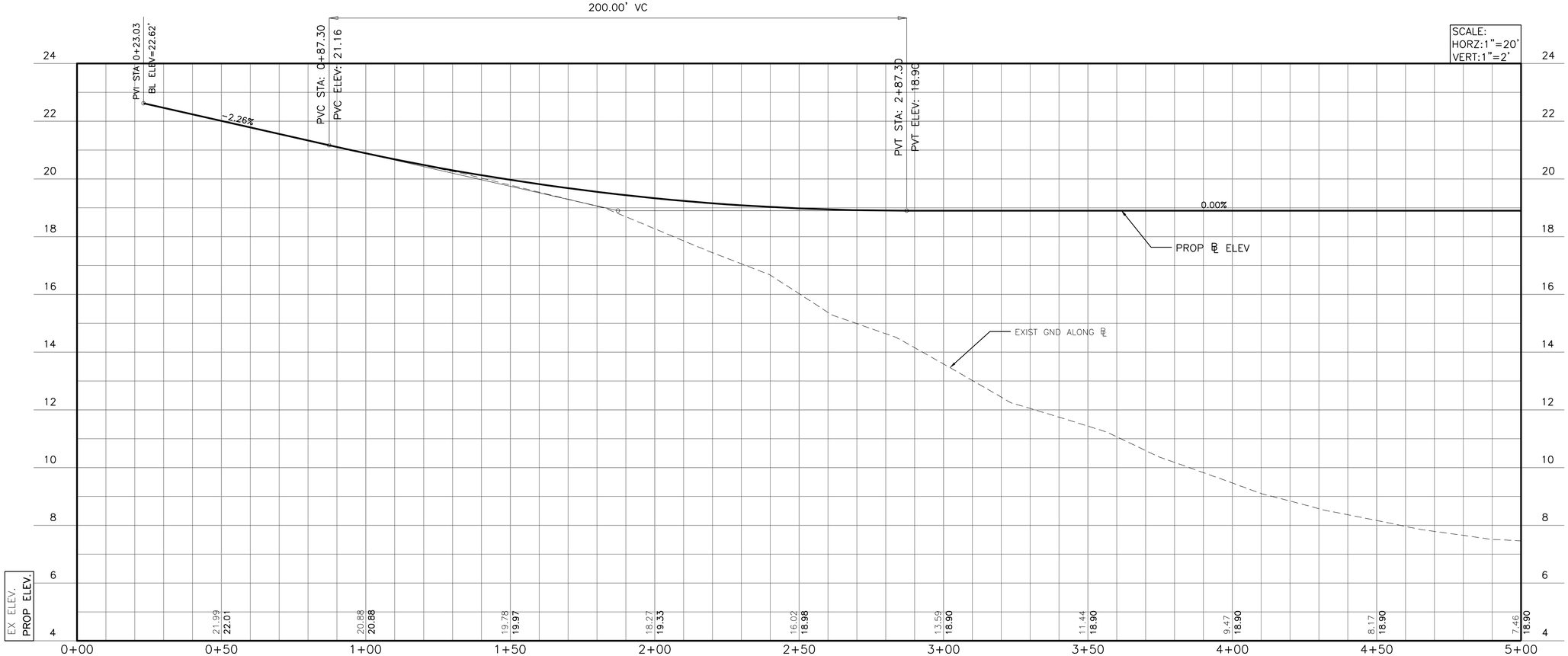

ISSUED FOR BID

Freese and Nichols, Inc.
Texas Registered Engineering Firm F-2144

STATE OF TEXAS
SCOTT W. KIRBY
93651
LICENSED
PROFESSIONAL ENGINEER
1-10-2022

FREESE AND NICHOLS
10497 Town and Country Way,
Suite 600
Houston, Texas 77024
Phone - (713) 600-6800
Web - www.freese.com

CITY OF BEAUMONT
COLLIER'S FERRY PUMP STATION

ACCESS RD PLAN AND PROFILE
STA 0+00 TO STA 5+00

F&N JOB NO.	BMT20326
DATE	01/07/2022
DESIGNED	RNL
DRAWN	RNL
REVISED	
CHECKED	SWK
FILE NAME	CV-ACC RD-PNP.dwg

NO.	ISSUE	BY	DATE

VERIFY SCALE 0 1
Bar is one inch on original drawing. If not one inch on this sheet, adjust scale.

SHEET C-29
SEQ. 43

ACAD Rel: 24.0s (LMS Tech)
Filename: N:\IF\Drawings\3. Roadway\CV-ACC RD-PNP.dwg
Last Saved: 1/10/2022 11:18 AM Saved By: 03841

Plot Date: 1/10/2022 12:05 PM Plot By: 03952 Filename: N:\IF\Drawings\3. Roadway\CV-ACC RD-PNP.dwg

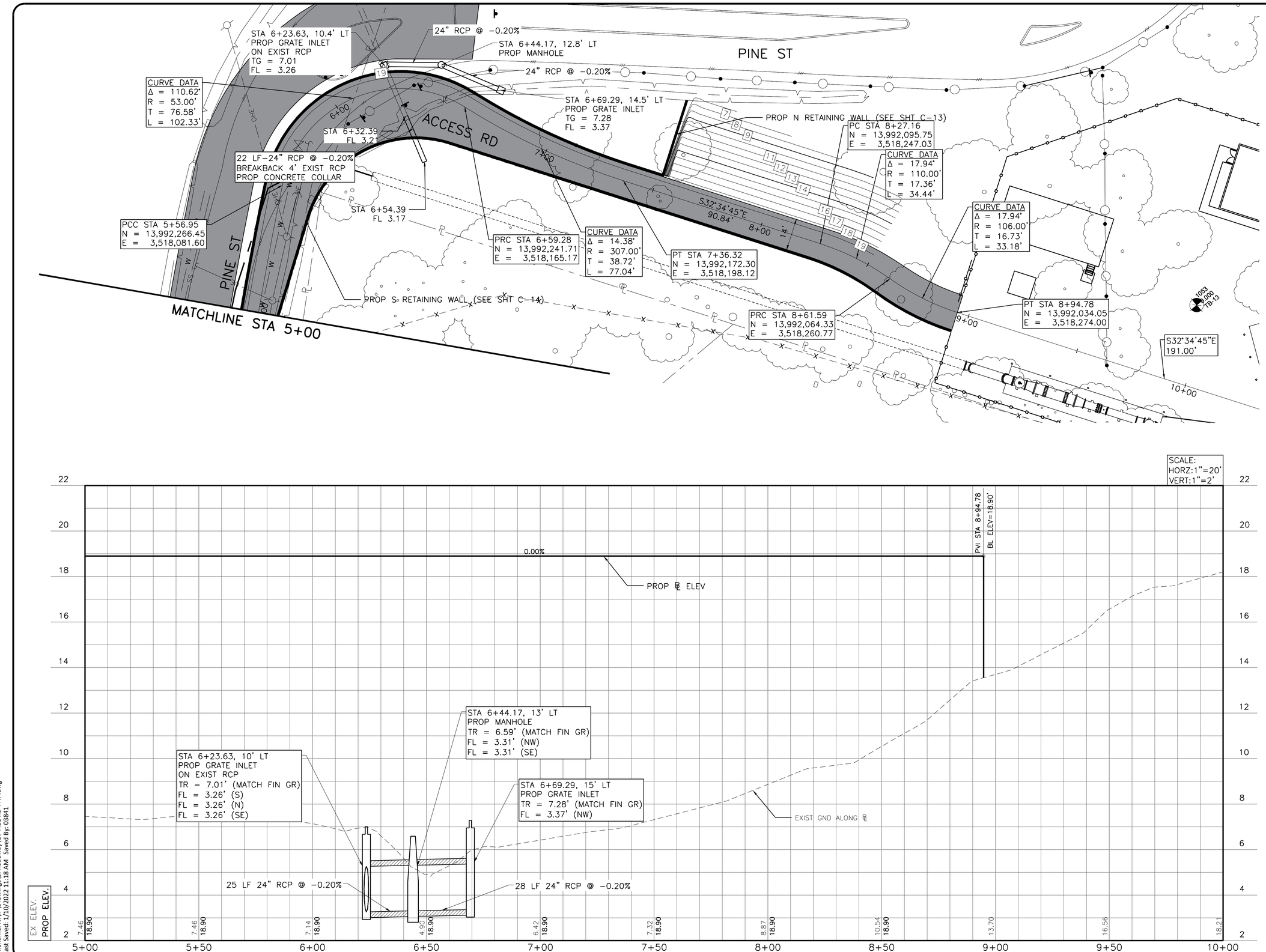

ISSUED FOR BID

Freese and Nichols, Inc.
Texas Registered Engineering Firm F-2144

STATE OF TEXAS
SCOTT W. KIRBY
93651
LICENSED
PROFESSIONAL ENGINEER
1-10-2022

FREESE AND NICHOLS
10497 Town and Country Way,
Suite 600
Houston, Texas 77024
Phone - (713) 600-6800
Web - www.freese.com

CITY OF BEAUMONT
COLLIER'S FERRY PUMP STATION

ACCESS RD PLAN AND PROFILE
STA 5+00 TO STA 10+00

NO.	ISSUE	BY	DATE

F&N JOB NO. BMT20326
DATE 01/07/2022
DESIGNED RNL
DRAWN RNL
REVISED
CHECKED SWK
FILE NAME CV-ACC RD-PNP.dwg

VERIFY SCALE 0 1
Bar is one inch on original drawing. If not one inch on this sheet, adjust scale.

SHEET C-30
SEQ. 44

ACAD Rel: 24.0s (LMS Tech)
Filename: N:\IF\Drawings\3. Roadway\CV-ACC RD-PNP.dwg
Last Saved: 1/10/2022 11:18 AM Saved By: 03841

Plot Date: 1/10/2022 12:05 PM Plot By: 03952 Filename: N:\IF\Drawings\3. Roadway\CV-ACC RD-PNP.dwg

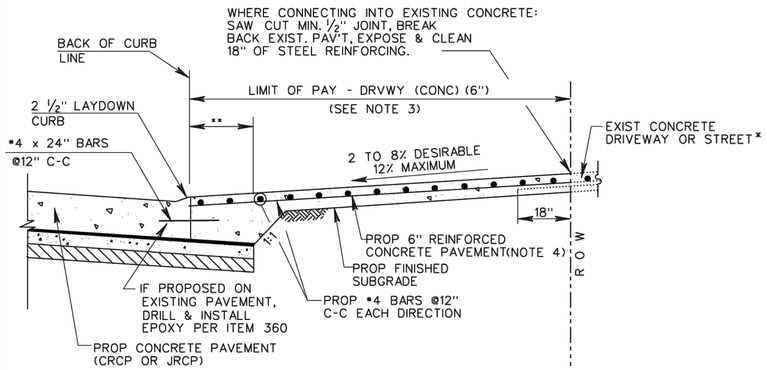

PROPOSED DRIVEWAY DETAIL
REINFORCED CONCRETE AT CONCRETE
CURB AND GUTTER ROADWAY

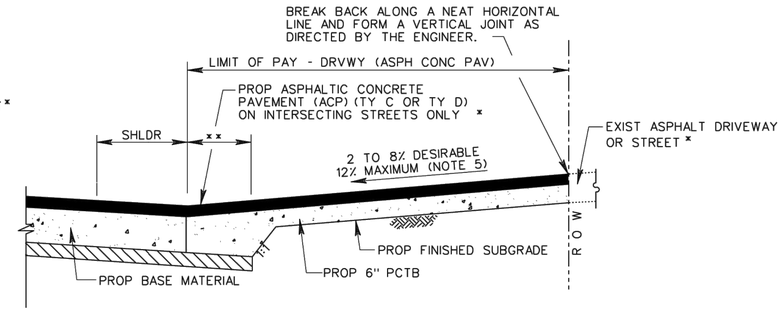

PROPOSED DRIVEWAY DETAIL
ASPHALT W/ PCTB AT ASPHALT ROADWAY

NOTES:

1. ALSO SEE SHEET 2 OF 2 FOR DRIVEWAY SLOPES WITH PROPOSED SIDEWALKS.
2. FOR INTERSECTIONS BUILT WITH CRCP PAVEMENT SEE CRCP DETAIL.
3. FAST TRACK CONCRETE IS PAID AS DRVWY (CONC) (FAST TRACK).
4. THICKNESS OF DRIVEWAY IS 6 INCHES FOR REGULAR AND FAST TRACK CONCRETE.
5. MAXIMUM SLOPE IS: 12% RESIDENTIAL
   8% OTHERS

LEGEND:

PCTB- PORTLAND CEMENT TREATED BASE

JRCP- JOINTED REINFORCED CONCRETE PAVEMENT

CRCP- CONTINUOUSLY REINFORCED CONCRETE PAVEMENT

ACP- ASPHALTIC CONCRETE PAVEMENT

* FOR STREET INTERSECTIONS REFER TO PAVING DETAILS AND INTERSECTION DETAILS FOR REINFORCING STEEL AND SECTION REQUIREMENTS.

** PROPOSED LIMIT OF ROADWAY BASE AND/OR SUBGRADE

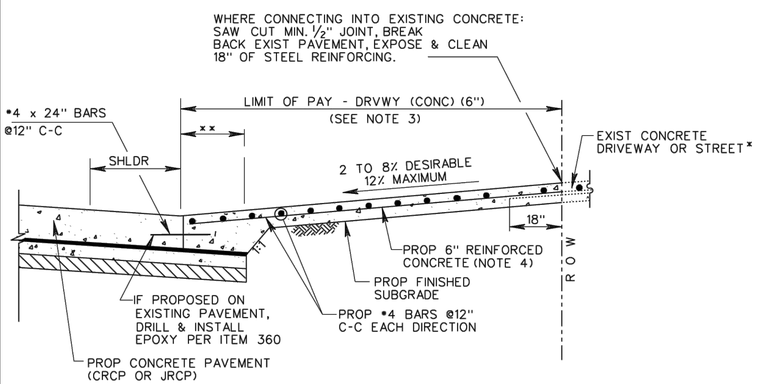

PROPOSED DRIVEWAY DETAIL
REINFORCED CONCRETE AT CONCRETE ROADWAY

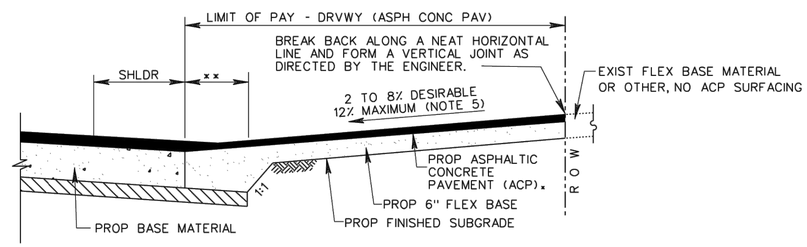

PROPOSED DRIVEWAY DETAIL
ASPHALT W/ FLEX BASE AT ASPHALT ROADWAY

ISSUED FOR BID

Freese and Nichols, Inc.
Texas Registered Engineering Firm F-2144

STATE OF TEXAS
SCOTT W. KIRBY
93651
LICENSED
PROFESSIONAL ENGINEER
1-10-2022

FREESE AND NICHOLS
10497 Town and Country Way,
Suite 600
Houston, Texas 77024
Phone: (713) 600-6800
Web: www.freese.com

CITY OF BEAUMONT
COLLIER'S FERRY PUMP STATION

DRIVEWAY DETAILS

NO.	ISSUE	BY	DATE

F&N JOB NO. BMT20326
DATE 01/07/2022
DESIGNED
DRAWN
REVIEWED
CHECKED
FILE NAME Driveway Detail.dwg

VERIFY SCALE 0 1
Bar is one inch on original drawing. If not one inch on this sheet, adjust scale.

SHEET C-31
SEQ. 45

ACAD Rel: 24.0s (LMS Tech)
Filename: N:\IF\Drawings\3. Roadway\Standards\Driveway Detail.dwg
Last Saved: 7/6/2021 1:59 PM Saved By: 03841

Plot Date: 1/7/2022 4:53 PM Plot By: 03952 Filename: N:\IF\Drawings\3. Roadway\Standards\Driveway Detail.dwg

DISCLAIMER:
The use of this standard is governed by the "Texas Engineering Practice Act". No warranty of any kind is made by TxDOT for any purpose whatsoever. TxDOT assumes no responsibility for the conversion of this standard to other formats or for incorrect results or damages resulting from its use.

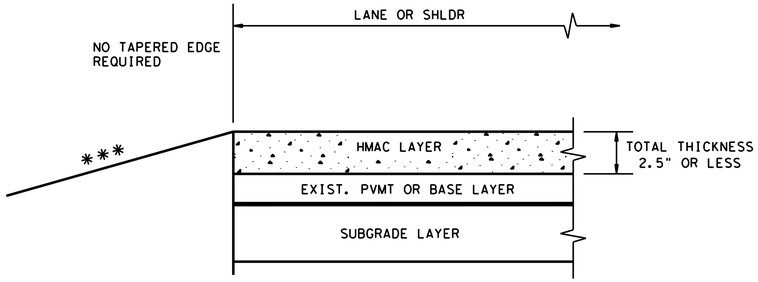

*** SEE TYPICAL SECTION FOR ROADSIDE DETAILS

CONDITION - 1
THIN HMAC SURFACES OR HMAC OVERLAY WITH THICKNESS OF 2.5" OR LESS

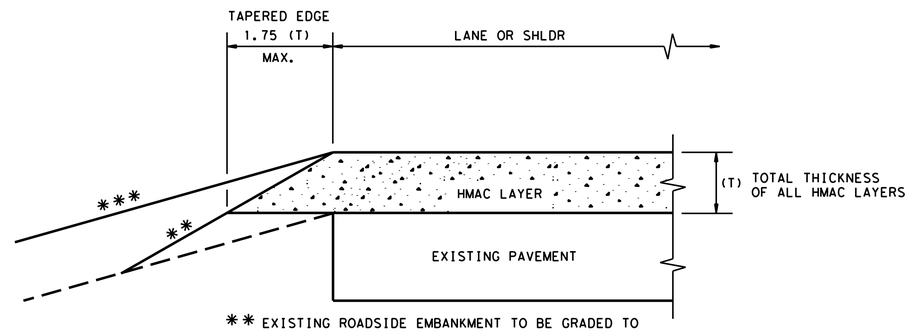

** EXISTING ROADSIDE EMBANKMENT TO BE GRADED TO PRODUCE A SMOOTH LEVEL SURFACE FOR PLACEMENT OF TAPERED EDGE. THIS WORK IS SUBSIDIARY TO THE VARIOUS BID ITEMS.

*** SEE TYPICAL SECTION FOR ROADSIDE DETAILS

CONDITION - 2
OVERLAY OF EXISTING PAVEMENT HMAC THICKNESS 2.5" TO 5"

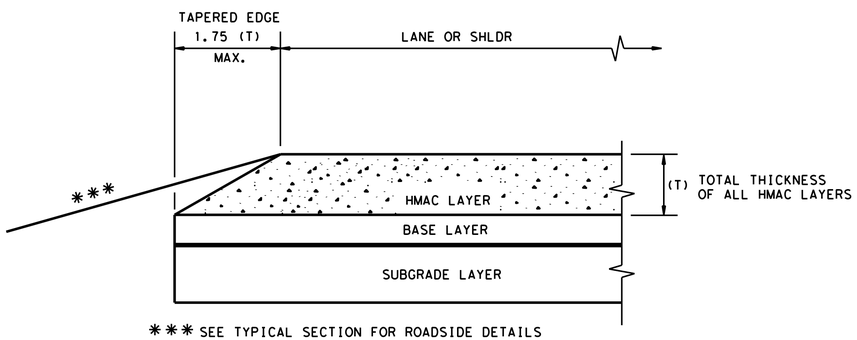

*** SEE TYPICAL SECTION FOR ROADSIDE DETAILS

CONDITION - 3
NEW OR RECONSTRUCTED PAVEMENT HMAC THICKNESS 2.5" TO 5"

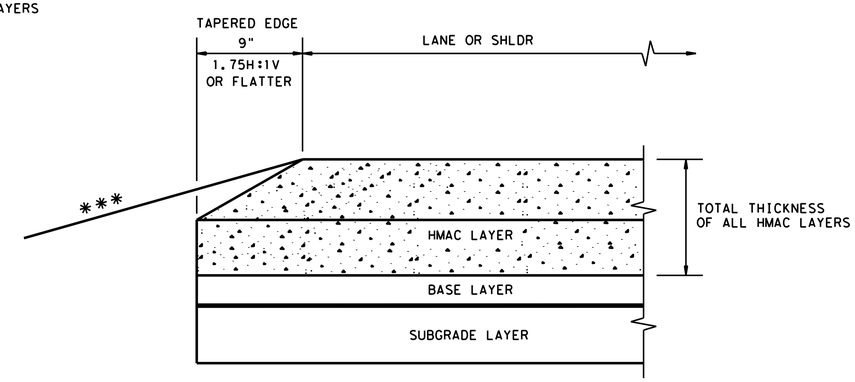

*** SEE TYPICAL SECTION FOR ROADSIDE DETAILS

CONDITION - 4
NEW OR RECONSTRUCTED PAVEMENT HMAC THICKNESS 5" OR GREATER

GENERAL NOTES

1. UNLESS OTHERWISE SHOWN IN THE PLANS, A VERTICAL EDGE IS PERMISSIBLE FOR HMAC PLACED GREATER THAN 5" BELOW THE EDGE OF PAVEMENT AND FOR THICKNESS OF HMAC LESS THAN 2.5".
2. FOR FURTHER INFORMATION REGARDING THE ROADSIDE AND PAVEMENT DETAILS, SEE TYPICAL SECTIONS.
3. PAYMENT FOR TAPERED EDGE WILL BE IN ACCORDANCE WITH APPLICABLE ITEMS IN THE CONTRACT.
4. THE SLOPE OF THE TAPERED EDGE SHALL BE 1.75H:1V OR FLATTER.
5. THE TAPERED EDGE SHALL BE PRODUCED BY USE OF A SCREED ATTACHMENT CAPABLE OF PRODUCING A SMOOTH COMPACTED SURFACE. ADDITIONAL COMPACTING EFFORT BEHIND THE SCREED IS NOT REQUIRED.

(NOT TO SCALE)

Texas Department of Transportation — Design Division Standard

TAPERED EDGE DETAILS HMAC PAVEMENT

TE(HMAC)-11

FILE: tehmac11.dgn	DN: TxDOT	CK: RL	DW: KB	CK:
© TxDOT January 2011	CONT	SECT	JOB	HIGHWAY
REVISIONS				
	DIST	COUNTY		SHEET NO.
				46

DATE:
FILE:

DISCLAIMER:
The use of this standard is governed by the "Texas Engineering Practice Act". No warranty of any kind is made by TxDOT for any purpose whatsoever. TxDOT assumes no responsibility for the conversion of this standard to other formats or for incorrect results or damages resulting from its use.

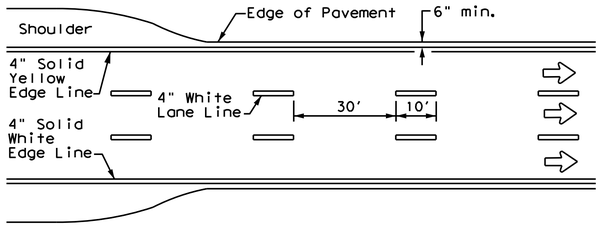

EDGE LINE AND LANE LINES ONE-WAY ROADWAY WITH OR WITHOUT SHOULDERS

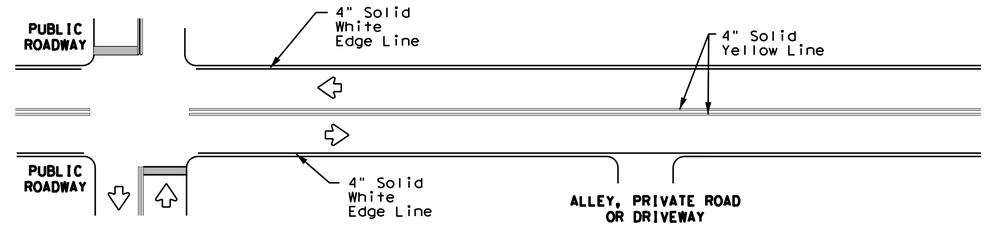

TYPICAL TWO-LANE, TWO-WAY PAVEMENT MARKINGS THROUGH INTERSECTIONS

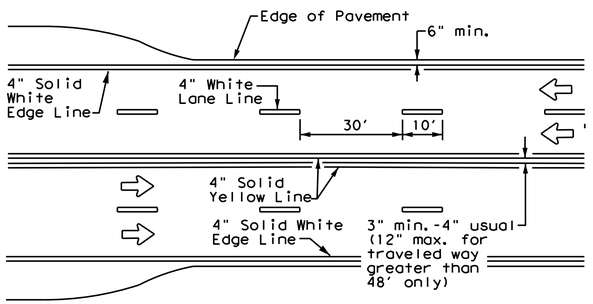

CENTERLINE AND LANE LINES FOUR LANE TWO-WAY ROADWAY WITH OR WITHOUT SHOULDERS

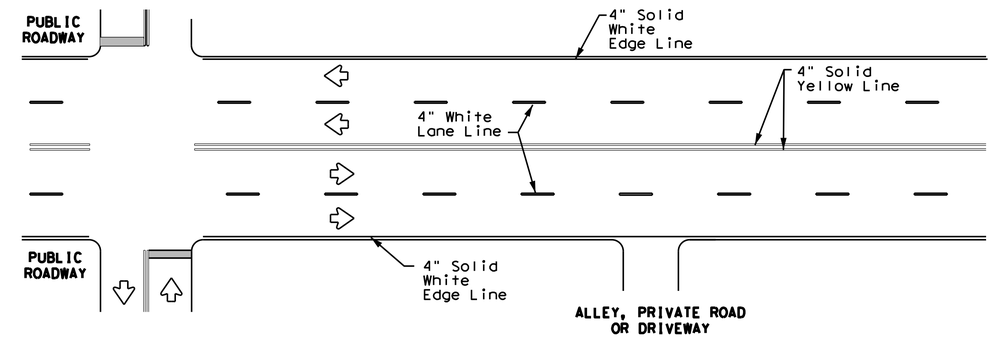

TYPICAL MULTI-LANE, TWO-WAY PAVEMENT MARKINGS THROUGH INTERSECTIONS

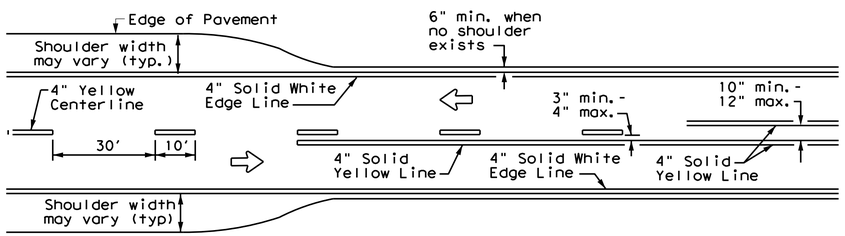

TWO LANE TWO-WAY ROADWAY WITH OR WITHOUT SHOULDERS

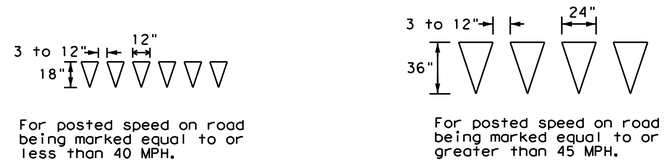

YIELD LINES

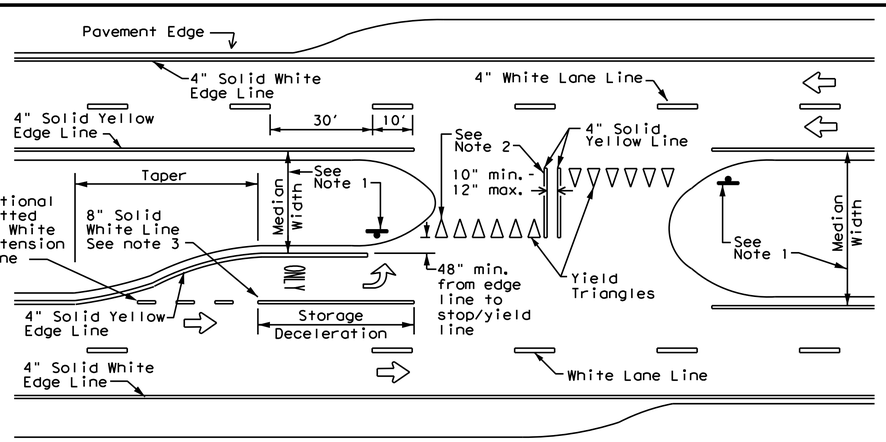

FOUR LANE DIVIDED ROADWAY CROSSOVERS

NOTES

1. Where divided highways are separated by median widths at the median opening itself of 30 feet or more, median openings shall be signed as two separate intersections. Each median opening has two width measurements, with one measurement for each approach. The narrow median width will be the controlling width to determine if signs are required. Yield signs are the typical intersection control. Stop signs are optional as determined by the Engineer.

2. Install median striping (double yellow centerlines and stop bars/yield triangles) when a 50' or greater median centerline can be placed. Stop bars shall only be used with stop signs. Yield traingles shall only be used with yield signs.

3. Length of turn bays, including taper, deceleration, and storage lengths shall be as shown on the plans or as directed by the Engineer.

GENERAL NOTES

1. Edgeline striping shall be as shown in the plans or as directed by the Engineer. The edgeline should not be placed less less than 6 inches from the edge of pavement. This distance may vary due to pavement raveling or other conditions. Edgelines are not required in curb and gutter sections of roadways.

2. The traveled way includes only that portion of the roadway used for vehicular travel. It does not include the parking lanes, sidewalks, berms and shoulders. The traveled ways shall be measured from the inside of edgeline to the inside of edgeline of a two lane roadway.

MATERIAL SPECIFICATIONS	
PAVEMENT MARKERS (REFLECTORIZED)	DMS-4200
EPOXY AND ADHESIVES	DMS-6100
BITUMINOUS ADHESIVE FOR PAVEMENT MARKERS	DMS-6130
TRAFFIC PAINT	DMS-8200
HOT APPLIED THERMOPLASTIC	DMS-8220
PERMANENT PREFABRICATED PAVEMENT MARKINGS	DMS-8240

All pavement marking materials shall meet the required Departmental Material Specifications as specified by the plans.

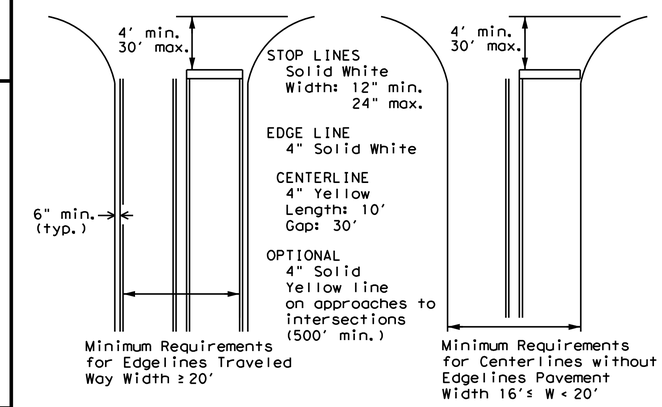

GUIDE FOR PLACEMENT OF STOP LINES, EDGE LINE & CENTERLINE

Based on Traveled Way and Pavement Widths for Undivided Highways

Texas Department of Transportation

Traffic Safety Division Standard

TYPICAL STANDARD PAVEMENT MARKINGS

PM(1)-20

FILE: pm1-20.dgn	DN:	CK:	DW:	CK:
© TxDOT November 1978	CONT	SECT	JOB	HIGHWAY
REVISIONS 8-95 3-03				
5-00 2-12	DIST		COUNTY	SHEET NO.
8-00 6-20				47

22A

DATE:
FILE:

REFLECTIVE RAISED PAVEMENT MARKERS FOR VEHICLE POSITIONING GUIDANCE

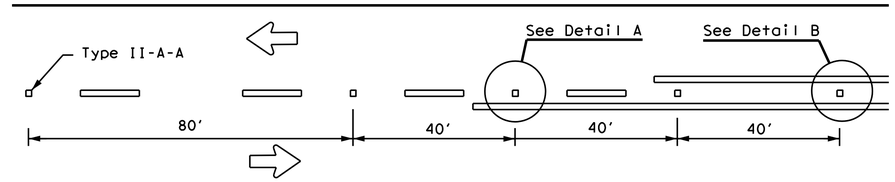

CENTERLINE FOR ALL TWO LANE ROADWAYS

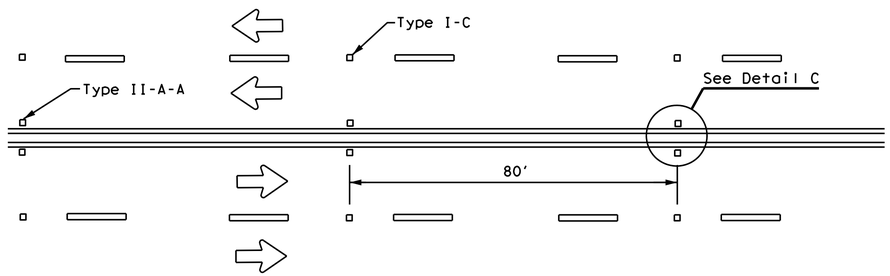

CENTERLINE & LANE LINES FOR FOUR LANE TWO-WAY HIGHWAYS

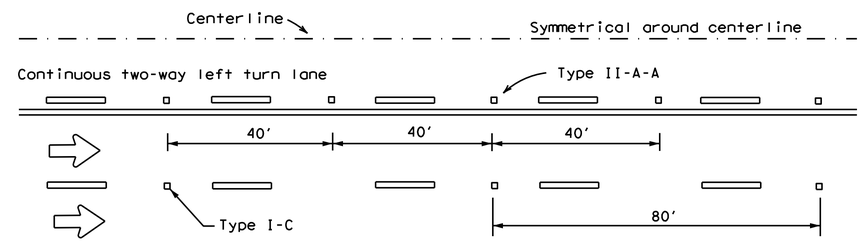

CENTERLINE AND LANE LINES FOR TWO-WAY LEFT TURN LANE

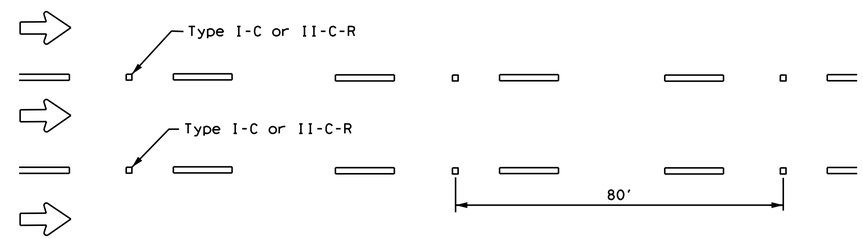

LANE LINES FOR ONE-WAY ROADWAY (NON-FREEWAY FACILITIES)

Raised pavement markers Type II-C-R shall have clear face toward normal traffic and red face toward wrong-way traffic.

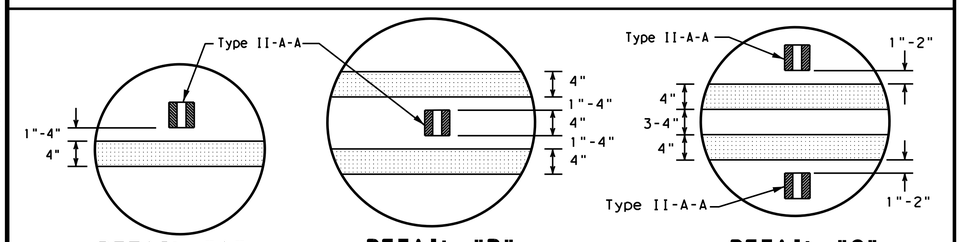

DETAIL "A" **DETAIL "B"** **DETAIL "C"**

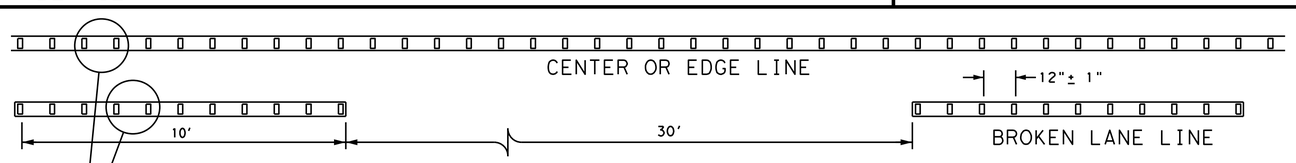

REFLECTORIZED PROFILE PATTERN DETAIL

USING REFLECTIVE PROFILE PAVEMENT MARKINGS

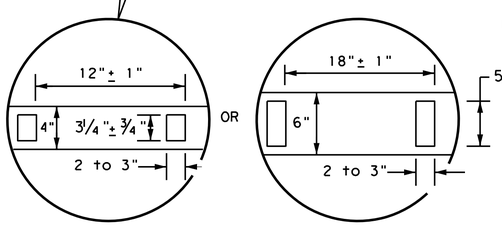

4" EDGE LINE, CENTER LINE OR LANE LINE

OPTIONAL 6" EDGE LINE, CENTER LINE OR LANE LINE

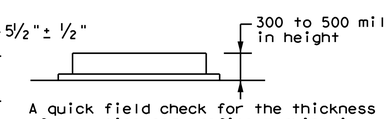

A quick field check for the thickness of base line and profile marking is approximately equal to a stack of 5 quarters to a maximum height of 7 quarters.

NOTE

Profile markings shall not be placed on roadways with a posted speed limit of 45 MPH or less.

GENERAL NOTES

1. All raised pavement markers placed in broken lines shall be placed in line with and midway between the stripes.
2. On concrete pavements the raised pavement markers should be placed to one side of the longitudinal joints.

MATERIAL SPECIFICATIONS	
PAVEMENT MARKERS (REFLECTORIZED)	DMS-4200
EPOXY AND ADHESIVES	DMS-6100
BITUMINOUS ADHESIVE FOR PAVEMENT MARKERS	DMS-6130
TRAFFIC PAINT	DMS-8200
HOT APPLIED THERMOPLASTIC	DMS-8220
PERMANENT PREFABRICATED PAVEMENT MARKINGS	DMS-8240

All pavement marking materials shall meet the required Departmental Material Specifications as specified by the plans.

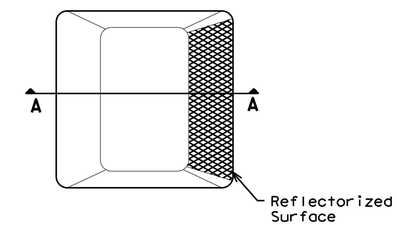

Type I (Top View)

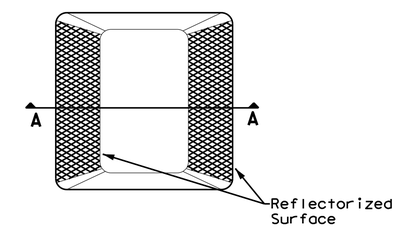

Type II (Top View)

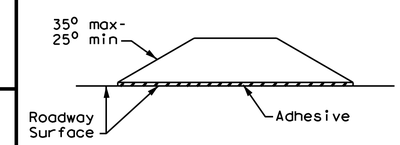

SECTION A

RAISED PAVEMENT MARKERS

Texas Department of Transportation — Traffic Safety Division Standard

POSITION GUIDANCE USING RAISED MARKERS RELECTORIZED PROFILE MARKINGS PM(2)-20

FILE: pm2-20.dgn	DN:	CK:	DW:	CK:
©TxDOT April 1977	CONT	SECT	JOB	HIGHWAY
REVISIONS 4-92 2-10, 5-00 2-12, 8-00 6-20	DIST		COUNTY	SHEET NO. 48

22B

DISCLAIMER: The use of this standard is governed by the "Texas Engineering Practice Act". No warranty of any kind is made by TxDOT for any purpose whatsoever. TxDOT assumes no responsibility for the conversion of this standard to other formats or for incorrect results or damages resulting from its use.

DATE:
FILE:

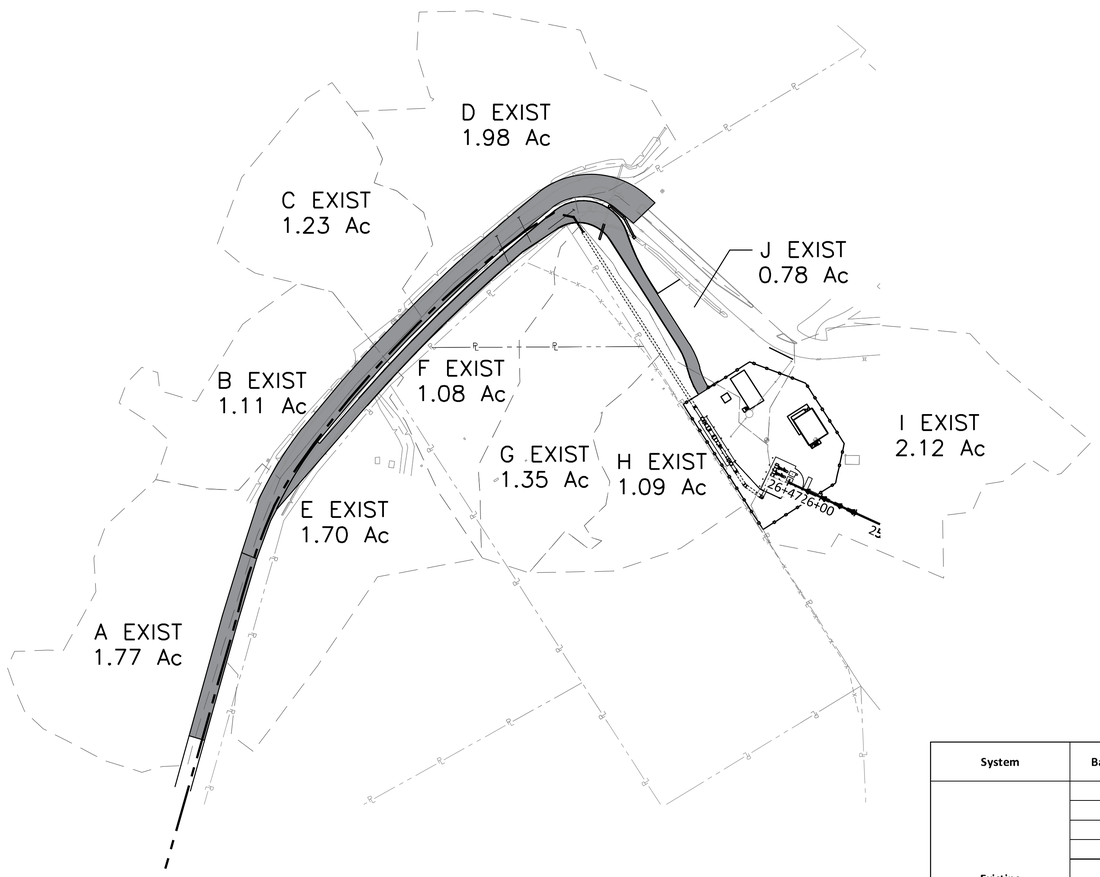

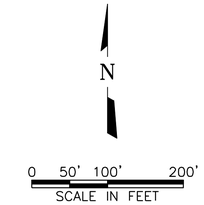

System	Basin	Area	TC	C	Intensity (in/hr)		Peak Flow (cfs)	
		(Ac)	(Min)		I_2-YR	I_100-YR	Q_2_YR	Q_100_YR
Existing	A	1.77	22.58	0.52	4.14	9.07	**3.82**	**8.36**
	B	1.11	33.69	0.71	3.35	7.53	**2.64**	**5.94**
	C	1.23	27.50	0.58	3.74	8.30	**2.69**	**5.95**
	D	1.98	16.05	0.53	4.85	10.43	**5.05**	**10.84**
	E	1.7	68.54	0.22	2.16	5.13	**0.81**	**1.91**
	F	1.08	31.01	0.22	3.51	7.84	**0.82**	**1.84**
	G	1.35	39.93	0.18	3.04	6.90	**0.74**	**1.68**
	H	1.09	24.65	0.18	3.96	8.72	**0.78**	**1.71**
	I	2.12	40.70	0.29	3.00	6.84	**1.87**	**4.26**
	J	0.76	15.24	0.30	4.96	10.63	**1.14**	**2.45**

ISSUED FOR BID

Freese and Nichols, Inc.
Texas Registered Engineering Firm F-2144

STATE OF TEXAS
SCOTT W. KIRBY
93651
LICENSED
PROFESSIONAL ENGINEER
1-10-2022

FREESE AND NICHOLS
10497 Town and Country Way,
Suite 600
Houston, Texas 77024
Phone - (713) 600-6800
Web - www.freese.com

CITY OF BEAUMONT
COLLIER'S FERRY PUMP STATION

DRAINAGE AREA MAP
EXISTING

F&N JOB NO. BMT20326
DATE 01/07/2022
DESIGNED RNL
DRAWN RNL
REVISED
CHECKED SWK
FILE NAME CV-DA MAP.dwg

NO.	ISSUE	BY	DATE

VERIFY SCALE 0 1
Bar is one inch on original drawing. If not one inch on this sheet, adjust scale.

SHEET C-35
SEQ. 49

ACAD Rel: 24.0s (LMS Tech)
Filename: N:\IF\Drawings\5. Drainage\CV-DA MAP.dwg
Last Saved: 1/10/2022 11:42 AM Saved By: 03952
Plot Date: 1/10/2022 12:06 PM Plot By: 03952 Filename: N:\IF\Drawings\5. Drainage\CV-DA MAP.dwg

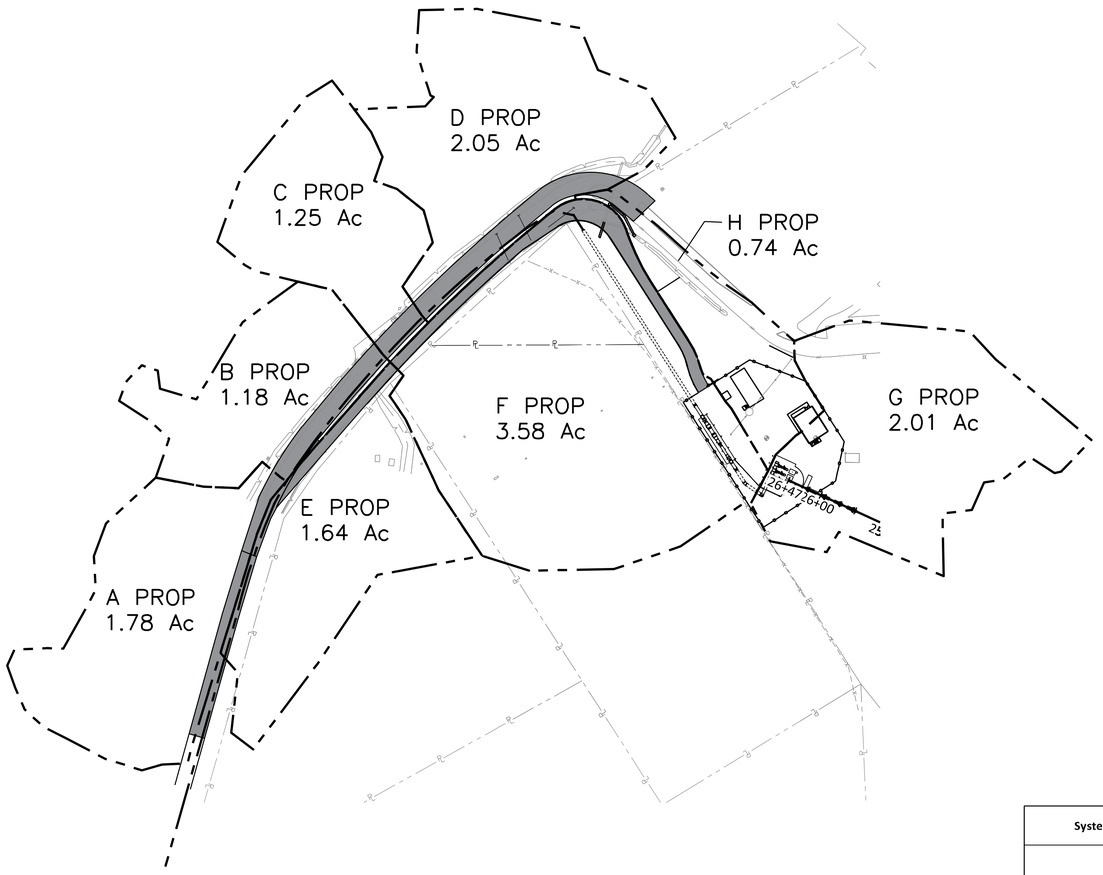

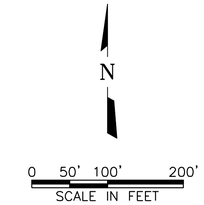

System	Basin	Area (Ac)	TC (Min)	C	Intensity (in/hr) I_2-YR	Intensity (in/hr) I_100-YR	Peak Flow (cfs) Q_2_YR	Peak Flow (cfs) Q_100_YR
Proposed	A	1.78	22.58	0.52	4.14	9.07	**3.85**	**8.44**
	B	1.18	33.69	0.71	3.35	7.53	**2.82**	**6.34**
	C	1.25	27.50	0.59	3.74	8.30	**2.75**	**6.09**
	D	2.05	16.05	0.53	4.85	10.43	**5.30**	**11.39**
	E	1.64	68.54	0.23	2.16	5.13	**0.83**	**1.96**
	F	3.56	31.01	0.16	3.51	7.84	**2.00**	**4.46**
	G	2.01	23.20	0.28	4.09	8.96	**2.30**	**5.05**
	H	0.74	18.90	0.26	4.51	9.78	**0.85**	**1.85**

ISSUED FOR BID

Freese and Nichols, Inc.
Texas Registered Engineering Firm F-2144

STATE OF TEXAS
SCOTT W. KIRBY
93651
LICENSED
PROFESSIONAL ENGINEER
1-10-2022

FREESE AND NICHOLS
10497 Town and Country Way,
Suite 600
Houston, Texas 77024
Phone - (713) 600-6800
Web - www.freese.com

CITY OF BEAUMONT
COLLIER'S FERRY PUMP STATION
DRAINAGE AREA MAP
PROPOSED

F&N JOB NO. BMT20326
DATE 01/07/2022
DESIGNED RNL
DRAWN RNL
REVISED
CHECKED SWK
FILE NAME CV-DA MAP.dwg

NO.	ISSUE	BY	DATE

VERIFY SCALE 0 1
Bar is one inch on original drawing. If not one inch on this sheet, adjust scale.

SHEET C-36
SEQ. 50

ACAD Rel: 24.0s (LMS Tech)
Filename: N:\IF\Drawings\5. Drainage\CV-DA MAP.dwg
Last Saved: 1/10/2022 11:42 AM Saved By: 03952

Plot Date: 1/10/2022 12:06 PM Plot By: 03952 Filename: N:\IF\Drawings\5. Drainage\CV-DA MAP.dwg

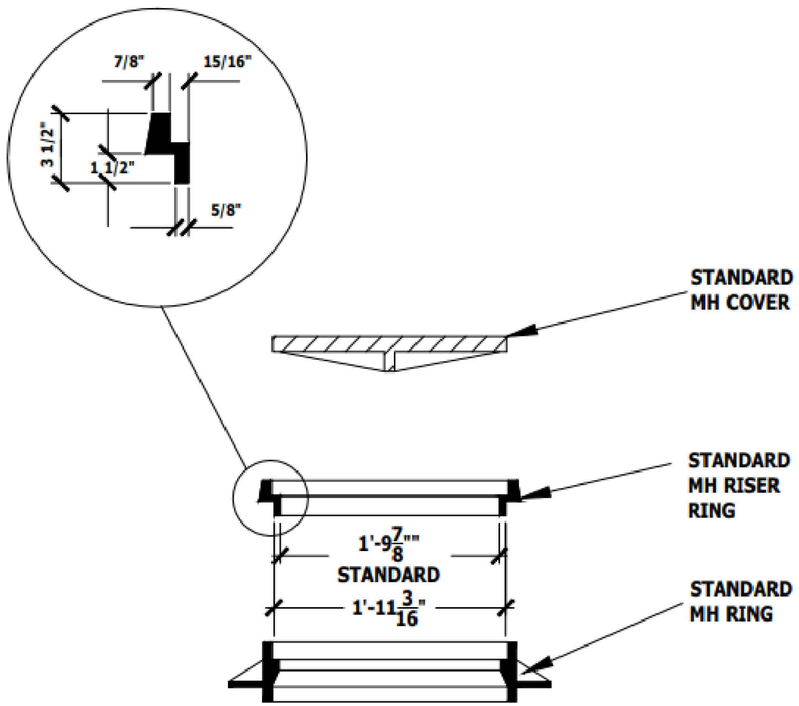

MANHOLE INCREASER RING DETAIL FOR STANDARD MANHOLE FRAME AND COVER

CITY OF BEAUMONT
WATER UTILITIES DEPARTMENT
N.T.S.

H-10

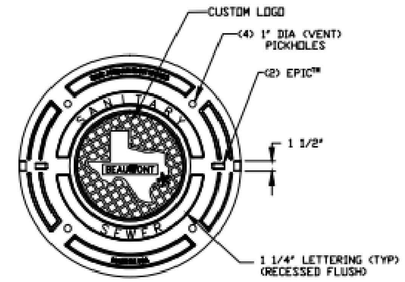

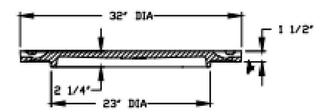

COVER SECTION

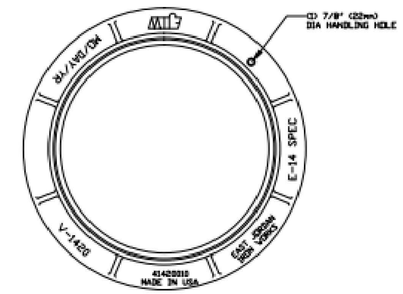

FRAME TOP VIEW

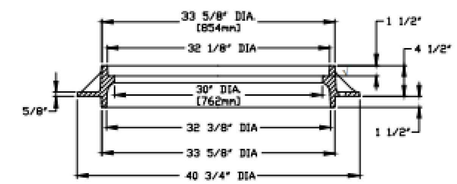

FRAME SECTION

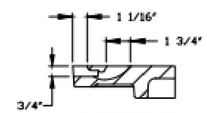

PICKHOLE DETAIL

DENOTES MACHINED SURFACE

SPECIFICATIONS:

1. MATERIAL: RING: CAST IRON A. S. T. M. A-48, CLASS NO. 35, COVER: DUCTILE IRON, ASTM A536, AASHTO M306

2. ALL CASTINGS SHALL BE FIRST QUALITY, SMOOTH CASTINGS, FREE FROM FLAWS, BLOW HOLES, SAND HOLES OR OTHER IMPERFECTIONS.

3. THE BEARING SURFACES OF ALL FRAMES AND COVERS BOTH SHALL BE MACHINED FINISHED FOR FULL PERIPHERY EVEN BEARINGS.

4. ALL CASTINGS MUST BE SAND BLASTED CLEAN OF SCALE OR SAND SO AS TO PRESENT A SMOOTH, CLEAN AND UNIFORM SURFACE.

5. THE WEIGHT OF THE MANHOLE RING SHOULD NOT EXCEED 235 LBS.

6. THE WEIGHT OF THE MANHOLE COVER SHOULD NOT EXCEED 175 LBS.

STANDARD MANHOLE FRAME AND COVER

CITY OF BEAUMONT
WATER UTILITIES DEPARTMENT
N.T.S.

H-12

ISSUED FOR BID

Freese and Nichols, Inc.
Texas Registered Engineering Firm F-2144

STATE OF TEXAS
SCOTT W. KIRBY
93651
LICENSED
PROFESSIONAL ENGINEER
1-10-2022

FREESE AND NICHOLS
10497 Town and Country Way,
Suite 600
Houston, Texas 77024
Phone - (713) 600-6800
Web - www.freese.com

CITY OF BEAUMONT
COLLIER'S FERRY PUMP STATION
DRAINAGE DETAILS

NO.	ISSUE	BY	DATE

F&N JOB NO. BMT20326
DATE 01/07/2022
DESIGNED RNL
DRAWN RNL
REVISED
CHECKED SWK
FILE NAME CV-DRAINAGE STANDARDS.dwg

VERIFY SCALE 0 1
Bar is one inch on original drawing. If not one inch on this sheet, adjust scale.

SHEET C-37
SEQ. 51

ACAD Rel: 24.0s (LMS Tech)
Filename: N:\IF\Drawings\5. Drainage\CV-DRAINAGE STANDARDS.dwg
Last Saved: 1/6/2022 8:33 PM Saved By: 03952

Plot Date: 1/6/2022 8:34 PM Plot By: 03952 Filename: N:\IF\Drawings\5. Drainage\CV-DRAINAGE STANDARDS.dwg

#1 - PRECAST RINGS FOR ADDITIONAL HEIGHT AS REQ'D.
#2 - TO BE GROUTED W/SMOOTH FINISH INSIDE
#3 - WRAP WITH CONCRETE FROM MANHOLE RING TO SHOULDER OF FIBERGLASS MANHOLE.

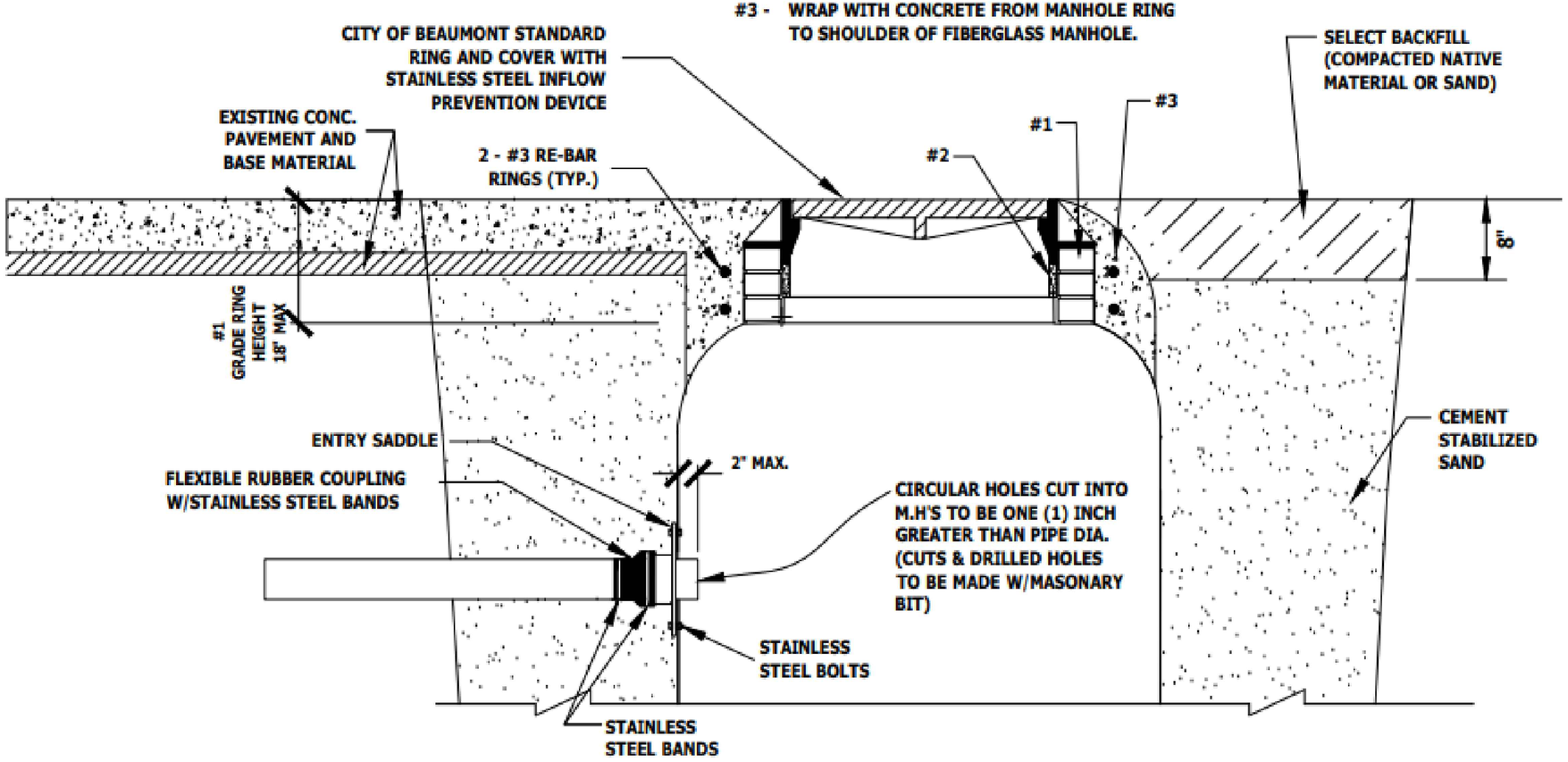

MANHOLE TOP DETAIL

CITY OF BEAUMONT
WATER UTILITIES DEPARTMENT
N.T.S.

H-11

ISSUED FOR BID

Freese and Nichols, Inc.
Texas Registered Engineering Firm F-2144

STATE OF TEXAS
SCOTT W. KIRBY
93651
LICENSED
PROFESSIONAL ENGINEER
1-10-2022

FREESE AND NICHOLS
10497 Town and Country Way,
Suite 600
Houston, Texas 77024
Phone - (713) 600-6800
Web - www.freese.com

CITY OF BEAUMONT
COLLIER'S FERRY PUMP STATION
DRAINAGE DETAILS

NO.	ISSUE	BY	DATE

F&N JOB NO. BMT20326
DATE 01/07/2022
DESIGNED RNL
DRAWN RNL
REVISED
CHECKED SWK
FILE NAME CV-DRAINAGE STANDARDS.dwg

VERIFY SCALE 0 1
Bar is one inch on original drawing. If not one inch on this sheet, adjust scale.

SHEET C-38
SEQ. 52

ACAD Rel: 24.0s (LMS Tech)
Filename: N:\IF\Drawings\5. Drainage\CV-DRAINAGE STANDARDS.dwg
Last Saved: 1/6/2022 8:33 PM Saved By: 03952

Plot Date: 1/6/2022 8:34 PM Plot By: 03952 Filename: N:\IF\Drawings\5. Drainage\CV-DRAINAGE STANDARDS.dwg

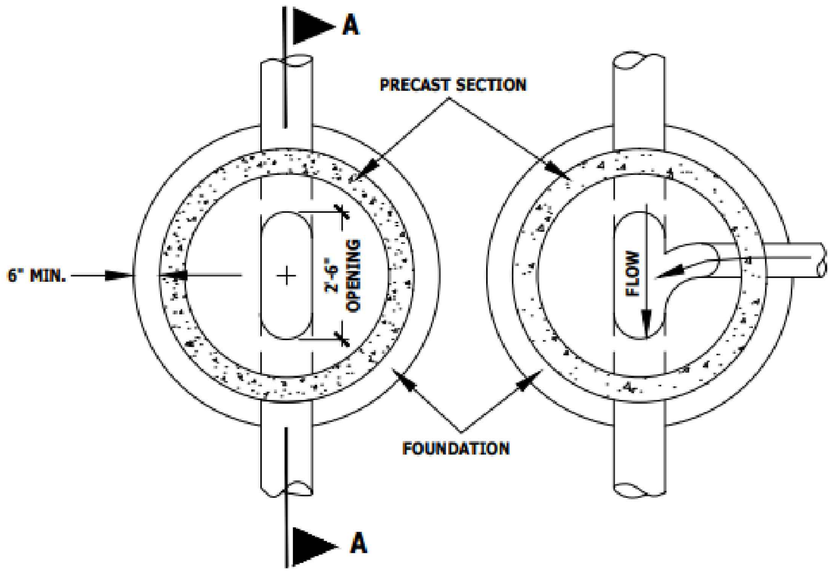

PLAN VIEW

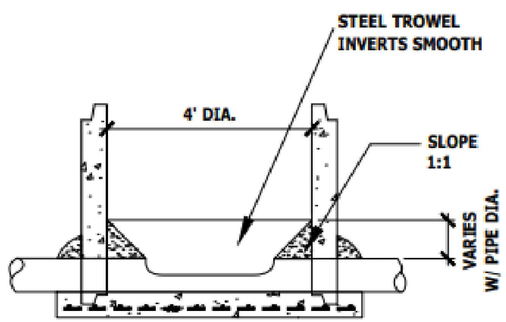

SECTION A-A

TYPICAL INVERT SHAPING

CITY OF BEAUMONT
WATER UTILITIES DEPARTMENT
N.T.S.

H-13

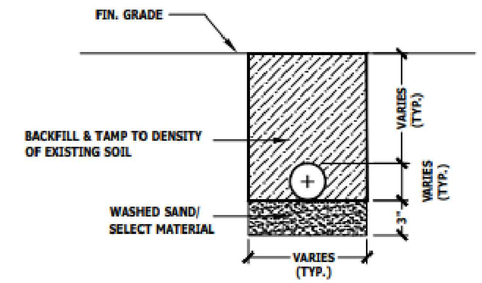

TYPICAL TRENCH BACKFILLING (AWAY FROM ROAD RIGHT-OF-WAY)

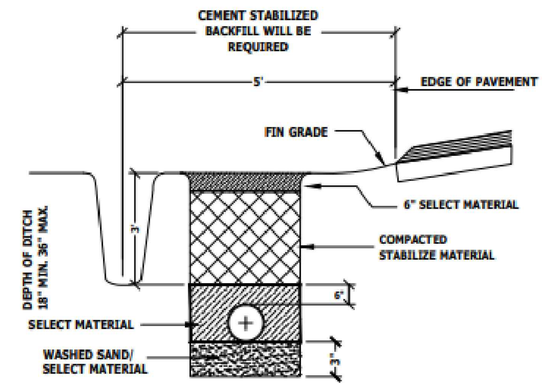

TYPICAL SECTION AT EDGE OF ROADWAY

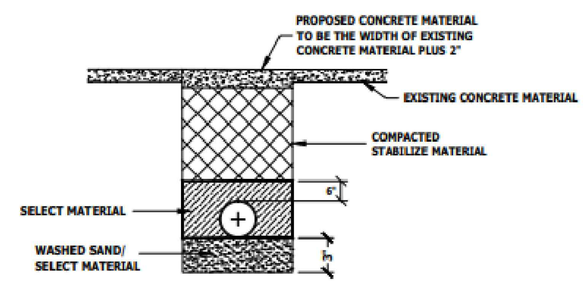

TYPICAL TRENCH BACKFILLING (UNDER CONCRETE PAVEMENT)

TYPICAL ROAD & TRENCH BACKFILLING

CITY OF BEAUMONT
WATER UTILITIES DEPARTMENT
N.T.S.

H-47

ISSUED FOR BID

Freese and Nichols, Inc.
Texas Registered Engineering Firm F-2144

STATE OF TEXAS
SCOTT W. KIRBY
93651
LICENSED
PROFESSIONAL ENGINEER
1-10-2022

FREESE AND NICHOLS
10497 Town and Country Way,
Suite 600
Houston, Texas 77024
Phone - (713) 600-6800
Web - www.freese.com

CITY OF BEAUMONT
COLLIER'S FERRY PUMP STATION
DRAINAGE DETAILS

F&N JOB NO. BMT20326
DATE 01/07/2022
DESIGNED RNL
DRAWN RNL
REVISED
CHECKED SWK
FILE NAME CV-DRAINAGE STANDARDS.dwg

NO.	ISSUE	BY	DATE

VERIFY SCALE 0 1
Bar is one inch on original drawing. If not one inch on this sheet, adjust scale.

SHEET C-39
SEQ. 53

ACAD Rel: 24.0s (LMS Tech)
Filename: N:\IF\Drawings\5. Drainage\CV-DRAINAGE STANDARDS.dwg
Last Saved: 1/6/2022 8:33 PM Saved By: 03952

Plot Date: 1/6/2022 8:34 PM Plot By: 03952 Filename: N:\IF\Drawings\5. Drainage\CV-DRAINAGE STANDARDS.dwg

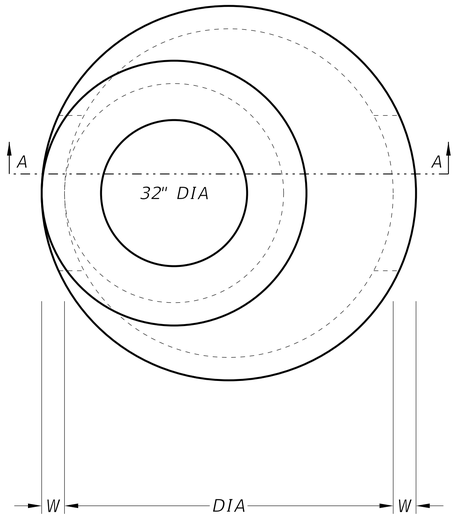

PLAN VIEW "A"

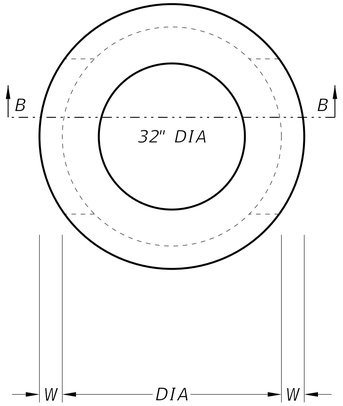

PLAN VIEW "B"

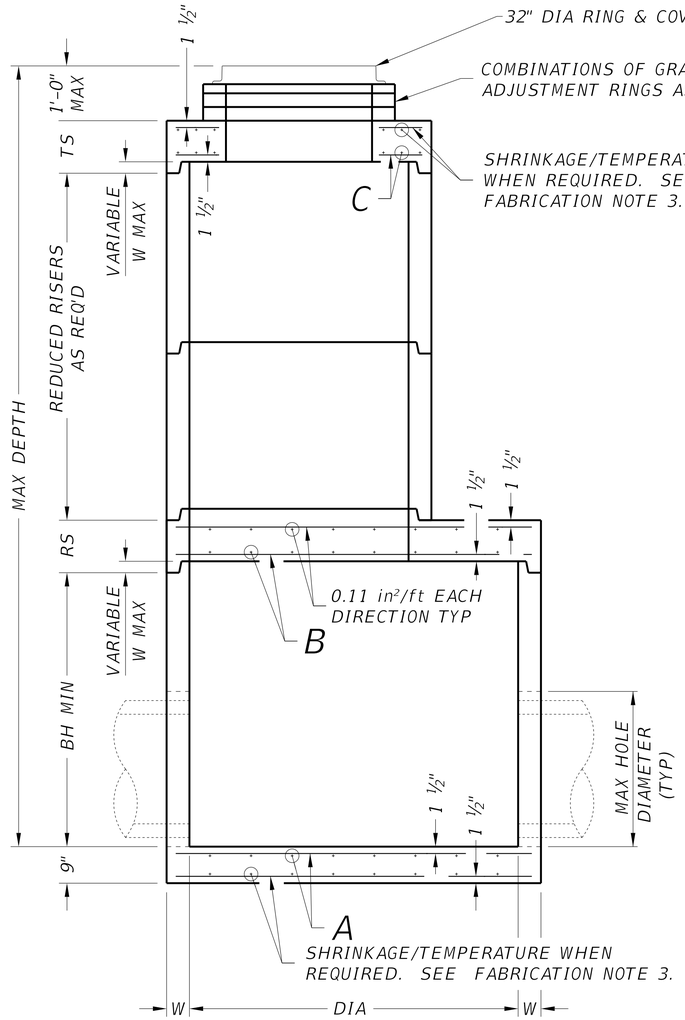

SECTION A-A

ROUND REDUCED RISER OPTION
SHOWING FLAT SLAB TOP

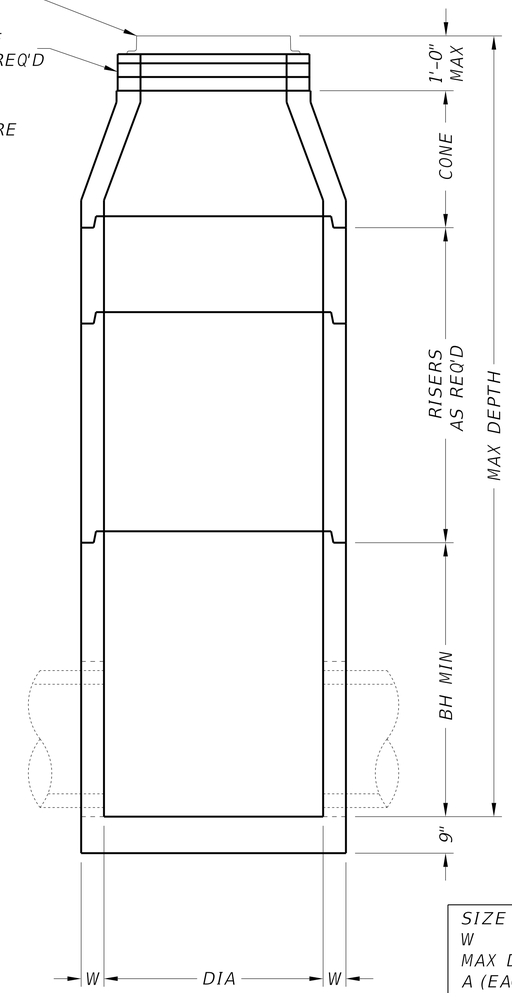

SECTION B-B

ROUND RISER OPTION
SHOWING CONE

FABRICATION NOTES:

1. Provide Class "H" concrete in accordance with Item 421 and having a minimum compressive strength of 5,000 psi.
2. Provide Grade 60 reinforcing steel or equivalent area of WWR. Provide circumferential reinforcing steel in vertical walls of base, riser and cone in accordance with ASTM C478.
3. Slabs with a thickness of 8" or greater require shrinkage and temperature reinforcing steel. Provide steel area = 0.11 in²/ft each way.
4. Manufacture base and risers to nearest 3" increment.
5. Design tongue and groove joints for full closure on both shoulders. Minimum spigot depth is ¾".
6. Provide lifting devices in conformance with Manufacturer's recommendations.
7. Provide cast iron solid cover, unless noted otherwise elsewhere in the plans.

INSTALLATION NOTES:

1. Cones may be concentric or eccentric. Reduction cones are acceptable. See Manufacturer for cone dimensions.
2. Inverts (benching) to be provided by Contractor. Concrete or mortar used for invert is subsidiary to this item.
3. Seal tongue and groove joints with preformed or bulk mastic in conformance with Manufacturer's recommendations. Tongue and groove joints may be grouted no more than 1" between each section, or ½ the joint depth, whichever is greater.
4. Do not grout rubber gasket joints without Manufacturer's recommendation.
5. Initial installation of grade adjustment rings is limited to 1'-0" Max as shown.
6. Grade adjustment rings may be increased to 2'-0" Max when future construction affects final grade of structure. Make adjustments greater than 2'-0" with additional risers. Adjustments may be made up to the Max depth shown. Structure must be evaluated if Max depth will be exceeded.

GENERAL NOTES:

1. Designed according to ASTM C478.
2. Payment for manhole is per Item 465, "Junction Boxes, Manholes, and Inlets" by type and size.
3. Pipe OD + placement tolerance must be equal or less than Max hole diameter. For rigid pipe, placement tolerance is 4" Max, 2" Min. For flexible pipe, consult boot/seal manufacturer's specification for placement tolerance.

Cover dimensions are clear dimensions, unless noted otherwise.

SIZE (DIA)	48 in	60 in	72 in
W	5 in	6 in	7 in
MAX DEPTH	25 ft	25 ft	25 ft
A (EACH WAY)	0.22 in²/ft	0.30 in²/ft	0.45 in²/ft
B (EACH WAY)	N/A	0.37 in²/ft	0.62 in²/ft
C (EACH WAY)	0.24 in²/ft	0.46 in²/ft	0.46 in²/ft
BH MIN	12 in	36 in	36 in
TS	9 in	9 in	9 in
RS	N/A	9 in	12 in
REDUCED RISER DIA	N/A	48 in	48/60 in
MAX HOLE DIA	32 in	40 in	54 in

HL93 LOADING

Texas Department of Transportation — Bridge Division Standard

PRECAST ROUND MANHOLE

PRM

FILE: prestd02-20.dgn	DN: TxDOT	CK: TxDOT	DW: TxDOT	CK: TxDOT
©TxDOT February 2020	CONT	SECT	JOB	HIGHWAY
REVISIONS				
	DIST	COUNTY		SHEET NO.
				54

DISCLAIMER:
The use of this standard is governed by the "Texas Engineering Practice Act". No warranty of any kind is made by TxDOT for any purpose whatsoever. TxDOT assumes no responsibility for the conversion of this standard to other formats or for incorrect results or damages resulting from its use.

DATE:
FILE:

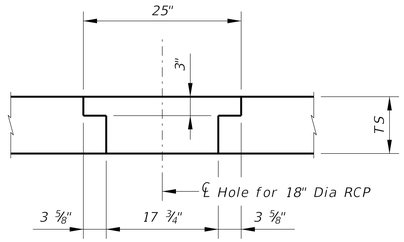

DETAIL "B"

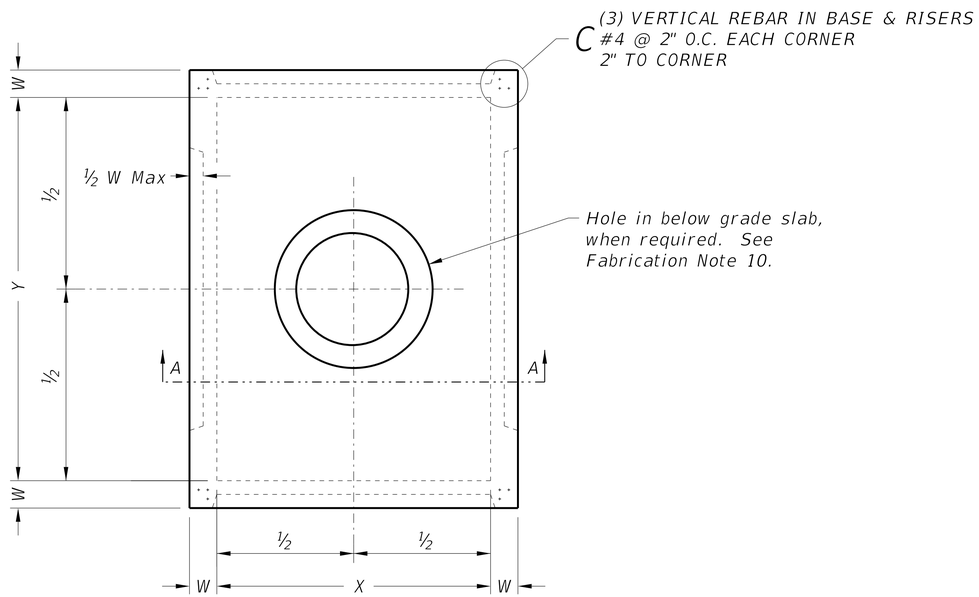

PLAN VIEW

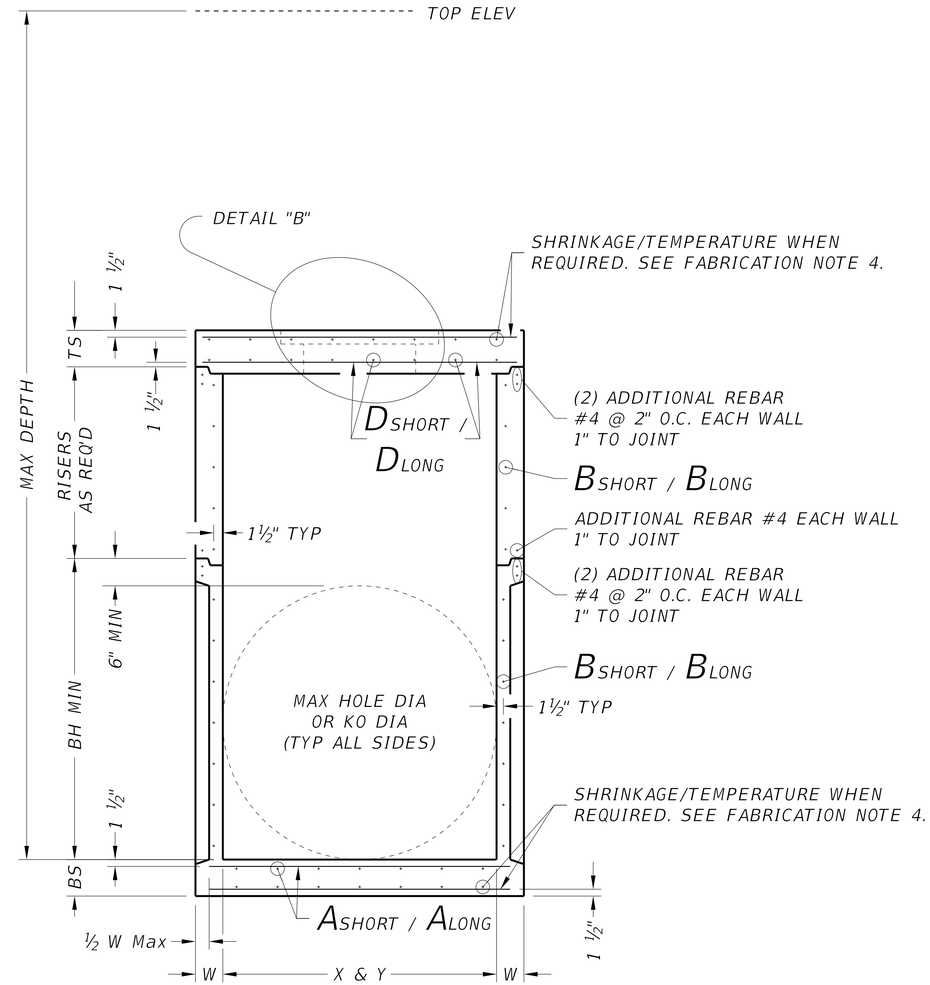

SECTION A-A

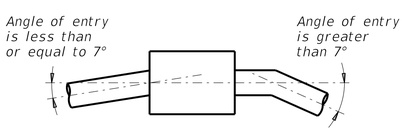

PIPE CONNECTION DETAIL

Connect pipes within 7° of normal to PJB wall.
If necessary, use pipe elbow or curved approach alignment to stay within this limit.

FABRICATION NOTES:

1. Provide Class "H" concrete in accordance with Item 421 and having a minimum compressive strength of 5,000 psi.
2. Provide Grade 60 reinforcing steel or equivalent area of WWR.
3. Provide typical clear cover of 1 ½" to reinforcing steel at interior or exterior walls.
4. Walls or slabs with a thickness of 8" or greater require shrinkage and temperature reinforcing steel. Provide steel area = 0.11 in²/ft each way.
5. No substitution is allowed for vertical and horizontal #4 bars in corners.
6. Manufacture base and risers to nearest 3" increment.
7. Design tongue and groove joints for full closure on both shoulders. Minimum spigot depth is ¾".
8. Provide lifting devices in conformance with Manufacturer's recommendations.
9. See sheet PDD for sizes, dimensions, and reinforcing steel not shown.
10. Provide hole in below grade slab only when PJB is installed with inlet type POD.

INSTALLATION NOTES:

1. Inverts (benching) to be provided by Contractor. Concrete or mortar used for invert is subsidiary to junction box.
2. Seal tongue and groove joints with preformed or bulk mastic in conformance with Manufacturer's recommendations. Tongue and groove joints may be grouted no more than 1" between each section, or ½ the joint depth, whichever is greater.
3. Do not grout rubber gasket joints without Manufacturer's recommendation.
4. For rigid pipe, cut hole in thin wall panel (KO) 4" Max, 2" Min larger than pipe OD.
5. For flexible pipe, consult boot/seal Manufacturer's specification for placement tolerance and hole size. Center pipe in hole and install boot/seal per Manufacturer's specification.

GENERAL NOTES:

1. Precast Junction Box consists of base slab, base unit, risers (as required), and below grade slab. See sheet PDD for sizes.
2. Designed according to ASTM C913.
3. Payment for junction box is per Item 465 "Junction Boxes, Manholes, and Inlets" by type and size.

Cover dimensions are clear dimensions, unless noted otherwise.

HL93 LOADING

Texas Department of Transportation — Bridge Division Standard

PRECAST JUNCTION BOX

PJB

FILE: prestd09-20.dgn	DN: TxDOT	CK: TxDOT	DW: TxDOT	CK: TxDOT
©TxDOT February 2020	CONT	SECT	JOB	HIGHWAY
REVISIONS				
	DIST	COUNTY		SHEET NO.
				55

DISCLAIMER:
The use of this standard is governed by the "Texas Engineering Practice Act". No warranty of any kind is made by TxDOT for any purpose whatsoever. TxDOT assumes no responsibility for the conversion of this standard to other formats or for incorrect results or damages resulting from its use.

DATE:
FILE:

		MAX DEPTH = 15 ft. to top of BASE SLAB										MAX DEPTH = 25 ft. to top of BASE SLAB												
		Base Slab			Base Unit or Riser Walls			Below Grade Slab (w/PJB) Reducing Slab (w/PB)				Base Slab			Base Unit or Riser Walls			Below Grade Slab (w/PJB) Reducing Slab (w/PB)						
	Size	Short Span Reinf Steel Area	Long Span Reinf Steel Area	Thickness	Short Span Reinf Steel Area	Long Span Reinf Steel Area	Thickness	Reduced Riser Size	Short Span Reinf Steel Area	Long Span Reinf Steel Area	Thickness	Short Span Reinf Steel Area	Long Span Reinf Steel Area	Thickness	Short Span Reinf Steel Area	Long Span Reinf Steel Area	Thickness	Reduced Riser Size	Short Span Reinf Steel Area	Long Span Reinf Steel Area	Thickness	Min Height (See Gen Note 3)	Max HOLE DIA (See Fab Note 2)	Max KO DIA (See Fab Note 2)
	X x Y	Ashort	Along	BS	Bshort	Blong	W	RWSxRWL or ID	Dshort	Dlong	TS	Ashort	Along	BS	Bshort	Blong	W	RWSxRWL or ID	Dshort	Dlong	TS	BH MIN	HOLE DIA	KO DIA
	ft.	in^2/ft	in^2/ft	in.	in^2/ft	in^2/ft	in.	ft. **	in^2/ft	in^2/ft	in.	in^2/ft	in^2/ft	in.	in^2/ft	in^2/ft	in.	ft. **	in^2/ft	in^2/ft	in.	ft.	in.	in.
Precast Junction Box (PJB)	3x3	0.23	0.23	6	0.19	0.19	6	N/A	0.37	0.37	9	0.29	0.29	6	0.24	0.24	6	N/A	0.37	0.37	9	3.5	36	36
	4x4	0.29	0.29	6	0.24	0.24	6	N/A	0.41	0.41	9	0.47	0.47	6	0.38	0.38	6	N/A	0.41	0.41	9	4.5	48	48
	3x5	0.29	0.18	6	0.19	0.35	6	N/A	0.48	0.48	9	0.39	0.18	6	0.23	0.59	6	N/A	0.48	0.48	9	3.5	36/60	36/60
	4x5	0.36	0.18	6	0.22	0.34	6	N/A	0.42	0.42	9	0.53	0.26	6	0.39	0.59	6	N/A	0.42	0.42	9	4.5	48/60	48/60
	5x5	0.36	0.36	6	0.34	0.34	6	N/A	0.43	0.43	9	0.62	0.62	6	0.59	0.59	6	N/A	0.43	0.43	9	5.5	60	60
	5x6	0.27	0.27	9	0.34	0.45	6	N/A	0.48	0.48	9	0.47	0.45	9	0.38	0.54	8	N/A	0.48	0.48	9	5.5	60/72	60/72
	6x6	0.27	0.27	9	0.45	0.45	6	N/A	0.56	0.56	9	0.52	0.52	9	0.54	0.54	8	N/A	0.56	0.56	9	6.5	72	72
	8x8	0.46	0.46	9	0.51	0.51	8	N/A	0.45	0.45	12	0.87	0.87	9	0.59	0.59	10	N/A	0.45	0.45	12	8.5	96	72
Precast Base (PB)	3x3	0.23	0.23	6	0.19	0.19	6	N/A	N/A	N/A	N/A	0.29	0.29	6	0.24	0.24	6	N/A	N/A	N/A	N/A	3.5	36	36
	4x4	0.29	0.29	6	0.24	0.24	6	N/A	N/A	N/A	N/A	0.47	0.47	6	0.38	0.38	6	N/A	N/A	N/A	N/A	4.5	48	48
	3x5	0.29	0.18	6	0.19	0.35	6	3x3	0.30	0.34	9	0.39	0.18	6	0.23	0.59	6	3x3	0.40	0.40	9	3.5	36/60	36/60
	4x5	0.36	0.18	6	0.22	0.34	6	3x3	0.30	0.30	9	0.53	0.26	6	0.39	0.59	6	3x3	0.46	0.37	9	4.5	48/60	48/60
	4x5	0.36	0.18	6	0.22	0.34	6	4x4	0.30	0.30	9	0.53	0.26	6	0.39	0.59	6	4x4	0.39	0.39	9	4.5	48/60	48/60
	4x5	0.36	0.18	6	0.22	0.34	6	48"	0.39	0.39	9	0.53	0.26	6	0.39	0.59	6	48"	0.47	0.47	9	4.5	48/60	48/60
	4x5	0.36	0.18	6	0.22	0.34	6	3x5	0.33	0.40	9	0.53	0.26	6	0.39	0.59	6	3x5	0.48	0.48	9	4.5	48/60	48/60
	5x5	0.36	0.36	6	0.34	0.34	6	3x3	0.34	0.34	9	0.62	0.62	6	0.59	0.59	6	3x3	0.53	0.53	9	5.5	60	60
	5x5	0.36	0.36	6	0.34	0.34	6	4x4	0.36	0.36	9	0.62	0.62	6	0.59	0.59	6	4x4	0.64	0.64	9	5.5	60	60
	5x5	0.38	0.38	6	0.34	0.34	6	48"	0.36	0.36	9	0.62	0.62	6	0.59	0.59	6	48"	0.64	0.64	9	5.5	60	60
	5x5	0.36	0.36	6	0.34	0.34	6	3x5	0.34	0.40	9	0.62	0.62	6	0.59	0.59	6	3x5	0.53	0.53	9	5.5	60	60
	5x6	0.31	0.31	9	0.34	0.45	6	3x3	0.34	0.34	9	0.47	0.45	9	0.38	0.54	8	3x3	0.61	0.50	9	5.5	60/72	60/72
	5x6	0.27	0.27	9	0.34	0.45	6	4x4	0.36	0.45	9	0.47	0.45	9	0.38	0.54	8	4x4	0.74	0.57	9	5.5	60/72	60/72
	5x6	0.29	0.29	9	0.34	0.45	6	48"	0.36	0.45	9	0.47	0.45	9	0.38	0.54	8	48"	0.74	0.57	9	5.5	60/72	60/72
	5x6	0.29	0.29	9	0.34	0.45	6	3x5	0.45	0.45	9	0.47	0.45	9	0.38	0.54	8	3x5	0.61	0.61	9	5.5	60/72	60/72
	6x6	0.29	0.29	9	0.45	0.45	6	3x3	0.41	0.41	9	0.52	0.52	9	0.54	0.54	8	3x3	0.74	0.74	9	6.5	72	72
	6x6	0.27	0.27	9	0.45	0.45	6	4x4	0.45	0.45	9	0.52	0.52	9	0.54	0.54	8	4x4	0.87	0.87	9	6.5	72	72
	6x6	0.29	0.29	9	0.45	0.45	6	48"	0.45	0.45	9	0.52	0.52	9	0.54	0.54	8	48"	0.87	0.87	9	6.5	72	72
	6x6	0.29	0.29	9	0.45	0.45	6	3x5	0.45	0.45	9	0.52	0.52	9	0.54	0.54	8	3x5	0.87	0.87	9	6.5	72	72
	8x8	0.52	0.52	9	0.51	0.51	8	3x3	0.61	0.61	12	0.91	0.91	9	0.70	0.70	10	3x3	0.85	0.85	12	8.5	96	72
	8x8	0.52	0.52	9	0.51	0.51	8	4x4	0.70	0.70	12	0.87	0.87	9	0.70	0.70	10	4x4	1.01	1.01	12	8.5	96	72
	8x8	0.52	0.52	9	0.51	0.51	8	48"	0.70	0.70	12	0.87	0.87	9	0.70	0.70	10	48"	1.01	1.01	12	8.5	96	72
	8x8	0.52	0.52	9	0.51	0.51	8	3x5	0.70	0.85	12	0.87	0.87	9	0.70	0.70	10	3x5	1.01	1.01	12	8.5	96	72

** Unless otherwise indicated.

FABRICATION NOTES:
1. Maximum spacing of reinforcement is 8".
2. At manufacturer's option, provide cast or cored holes or thin wall panels (KO) to the maximum diameter shown for each. When no penetration is required, it is acceptable to provide a wall with no sectional reduction.

GENERAL NOTES:
1. Precast Junction Box consists of base slab, base unit, risers (as required), and below grade slab. See sheet PJB for details.
2. Precast Base consists of base slab, base unit, risers (as required), reducing slab (as required), and reduced risers (as required). See sheet PB for details.
3. Min Height shown is for stock base units. Use stock base units whenever practical. Smaller height base units can be used in special installation circumstances, when noted elsewhere in the plans. Absolute minimum height of base units is 2'-6".

HL93 LOADING

Texas Department of Transportation — Bridge Division Standard

DESIGN DATA FOR PRECAST BASE AND JUNCTION BOX

PDD

FILE: prestd10-20.dgn	DN: TxDOT	CK: TxDOT	DW: TxDOT	CK: TxDOT
©TxDOT February 2020	CONT	SECT	JOB	HIGHWAY
REVISIONS	DIST	COUNTY		SHEET NO.
				56

DISCLAIMER:
The use of this standard is governed by the "Texas Engineering Practice Act". No warranty of any kind is made by TxDOT for any purpose whatsoever. TxDOT assumes no responsibility for the conversion of this standard to other formats or for incorrect results or damages resulting from its use.

DATE:
FILE:

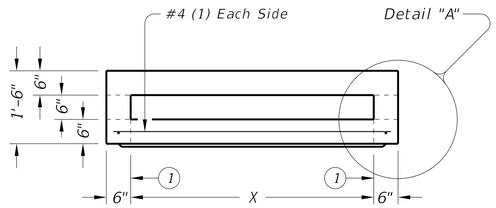

ELEVATION VIEW

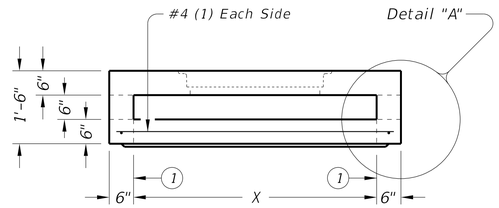

ELEVATION VIEW

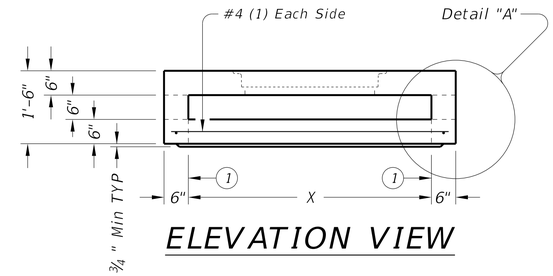

ELEVATION VIEW

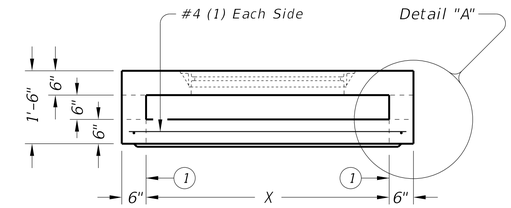

ELEVATION VIEW

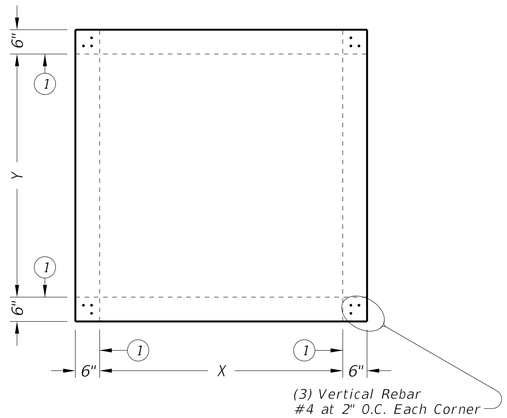

PLAN VIEW

NO OPENINGS

STYLE 'SL'

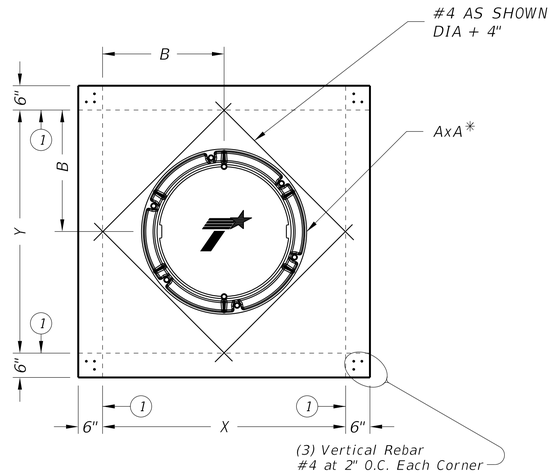

PLAN VIEW

32" DIA CAST-IN RING & COVER

STYLE 'RC'

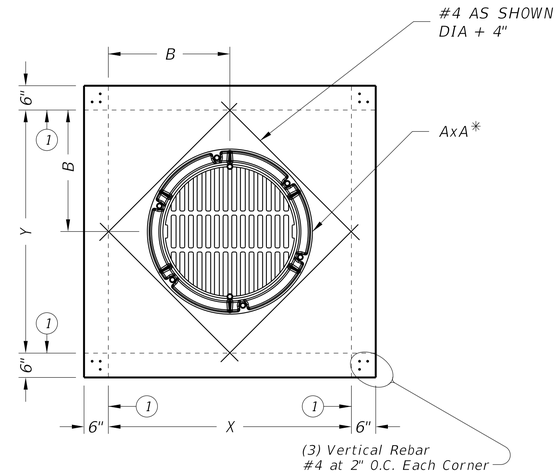

PLAN VIEW

32" DIA CAST-IN RING & GRATE

STYLE 'RG'

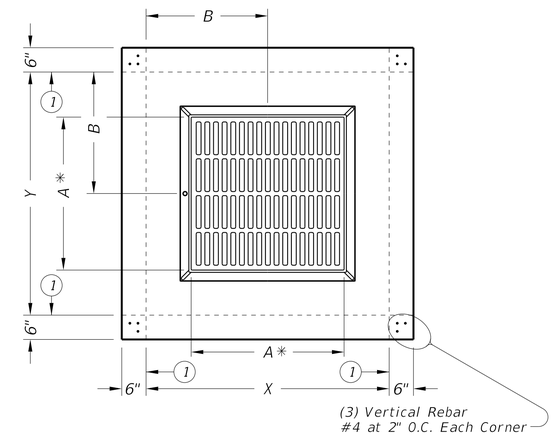

PLAN VIEW

CAST-IN FRAME & GRATE

STYLE 'FG'

(1) Matches inside face of wall of precast base or riser below inlet.

Style	Size (X x Y)	A x A *	B x B	Short Span Reinf Steel Area	Long Span Reinf Steel Area
SL	3'x3'	n/a	n/a	0.37 in²/ft	0.37 in²/ft
RC,RG	3'x3'	32" Dia	1.5'x1.5'	0.37 in²/ft	0.37 in²/ft
FG	3'x3'	3'x3'	1.5'x1.5'	0.37 in²/ft	0.37 in²/ft
SL	4'x4'	n/a	n/a	0.34 in²/ft	0.34 in²/ft
RC,RG	4'x4'	32" Dia	2'x2'	0.34 in²/ft	0.34 in²/ft
FG	4'x4'	3'x3'	2'x2'	0.34 in²/ft	0.34 in²/ft
FG	4'x4'	4'x4'	2'x2'	0.34 in²/ft	0.34 in²/ft
SL	5'x5'	n/a	n/a	0.43 in²/ft	0.43 in²/ft
RC,RG	5'x5'	32" Dia	2.5'x2.5'	0.68 in²/ft	0.68 in²/ft
FG	5'x5'	3'x3'	2.5'x2.5'	0.43 in²/ft	0.43 in²/ft
FG	5'x5'	4'x4'	2.5'x2.5'	0.43 in²/ft	0.43 in²/ft

* Nominal frame/grate or ring/cover size.

FABRICATION NOTES:

1. Provide Class "H" concrete in accordance with Item 421 and having a minimum compressive strength of 5,000 psi.
2. Provide Grade 60 reinforcing steel or equivalent area of WWR.
3. Provide clear cover of ¾" to reinforcing from bottom of slab for structural reinforcement. Place short span reinforcing closest to surface.
4. No substitution is allowed for diagonal #4 bars around openings.
5. Design tongue and groove joints for full closure on both shoulders. Minimum spigot depth is ¾".
6. Provide lifting devices in conformance with Manufacturer's recommendations.

INSTALLATION NOTES:

1. PAZD is for use in ditches and medians outside of the horizontal clearance (clear zone). Precast Area Zone Drain is not intended for direct traffic and may not be placed in roadway.
2. Seal tongue and groove joints with preformed or bulk mastic in conformance with Manufacturer's recommendations. Tongue and groove joints may be grouted no more than 1" between each section, or ½ the joint depth, whichever is greater.
3. Do not grout rubber gasket joints without Manufacturer's recommendation.

GENERAL NOTES:

1. Designed according to ASTM C913.
2. Payment for inlet is per Item 465, "Junction Boxes, Manholes, and Inlets" by type, style, size, and opening size (when applicable).

Construct cast-in-place reinforced concrete apron when shown elsewhere in plans. Use Class "A" concrete. Apron is subsidiary to PAZD. Apron is 1'-6" Min width around precast zone drain.

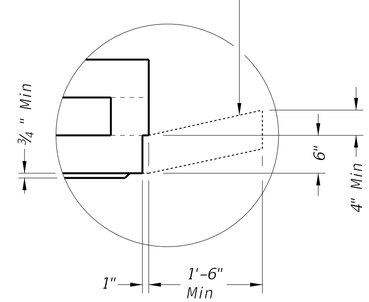

DETAIL "A"

(Reinforcing not shown for clarity)

When an apron is to be cast around PAZD, use detail above to create an apron ledge on all 4 sides.

Texas Department of Transportation

Bridge Division Standard

PRECAST AREA ZONE DRAIN

PAZD

FILE: prestd08-20.dgn	DN: TxDOT	CK: TxDOT	DW: TxDOT	CK: TxDOT
©TxDOT February 2020	CONT	SECT	JOB	HIGHWAY
REVISIONS	DIST		COUNTY	SHEET NO.
				57

DISCLAIMER:
The use of this standard is governed by the "Texas Engineering Practice Act". No warranty of any kind is made by TxDOT for any purpose whatsoever. TxDOT assumes no responsibility for the conversion of this standard to other formats or for incorrect results or damages resulting from its use.

DATE:
FILE:

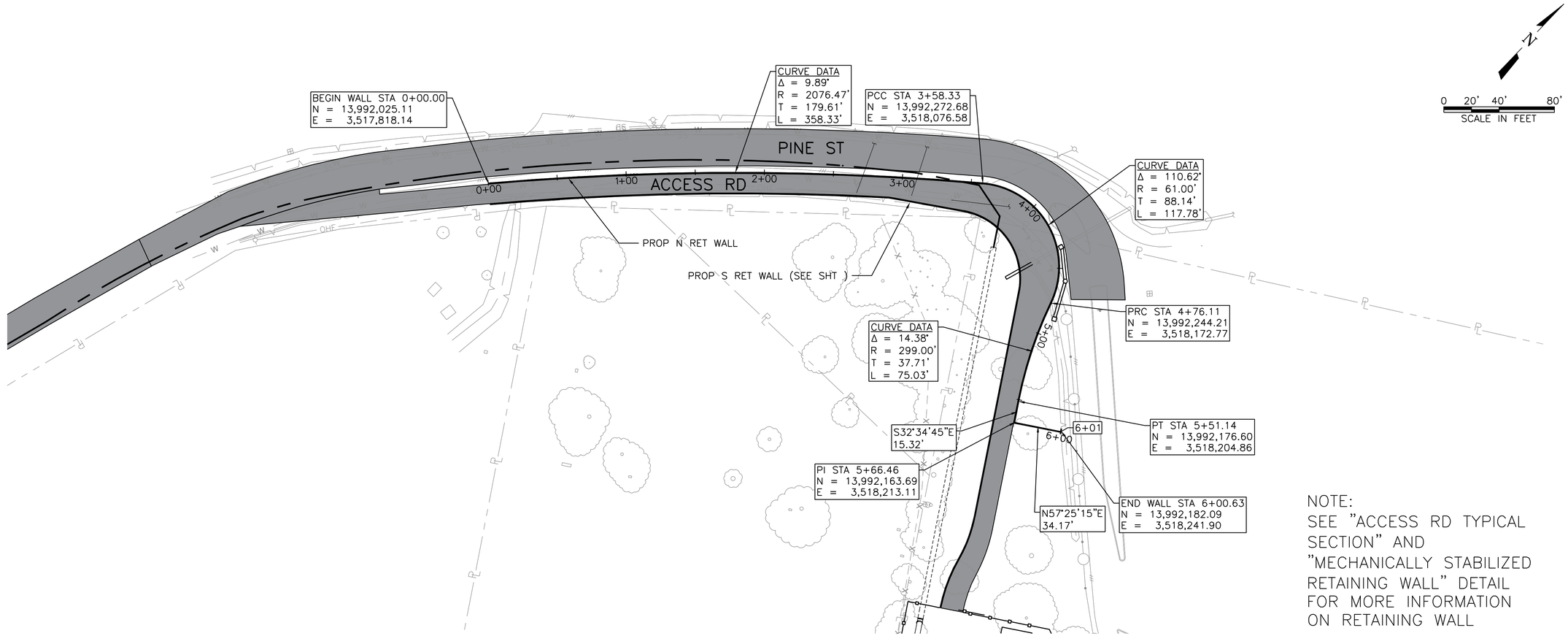

NOTE:
SEE "ACCESS RD TYPICAL SECTION" AND "MECHANICALLY STABILIZED RETAINING WALL" DETAIL FOR MORE INFORMATION ON RETAINING WALL

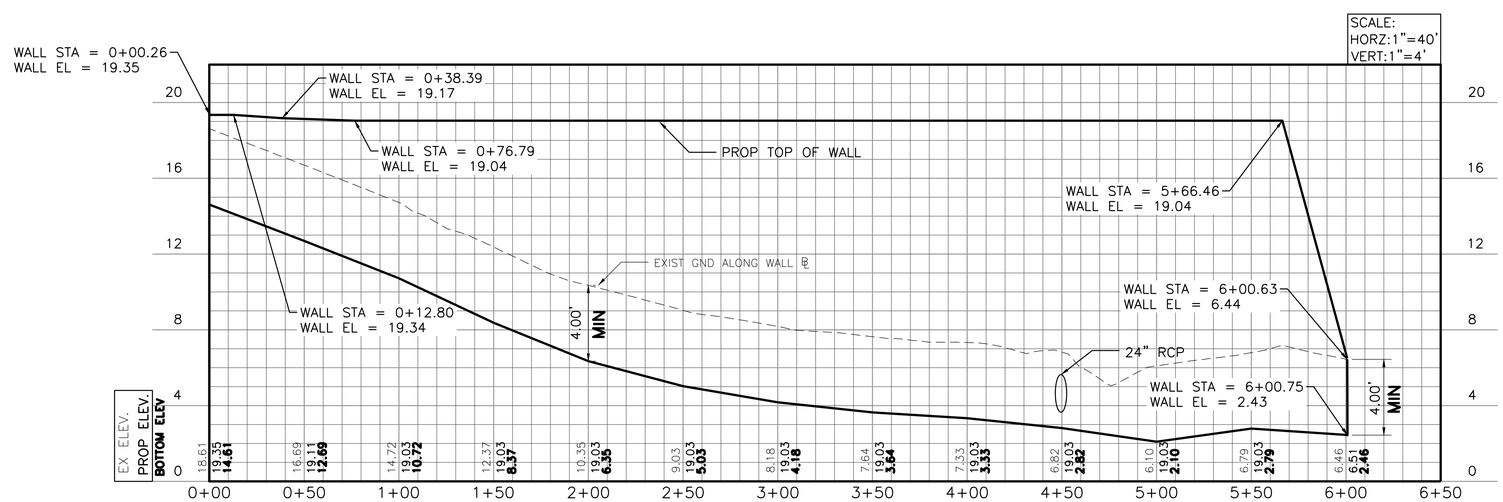

ISSUED FOR BID

Freese and Nichols, Inc.
Texas Registered Engineering Firm F-2144

STATE OF TEXAS
SCOTT W. KIRBY
93651
LICENSED
PROFESSIONAL ENGINEER
1-10-2022

FREESE AND NICHOLS
10497 Town and Country Way,
Suite 600
Houston, Texas 77024
Phone - (713) 600-6800
Web - www.freese.com

CITY OF BEAUMONT
COLLIER'S FERRY PUMP STATION
ACCESS RD N RETAINING WALL
PLAN AND PROFILE

F&N JOB NO.	BMT20326
DATE	01/07/2022
DESIGNED	RNL
DRAWN	RNL
REVISED	
CHECKED	SWK
FILE NAME	CV-ACC RD-N RET WALL.dwg

NO.	ISSUE	BY	DATE

VERIFY SCALE 0 1
Bar is one inch on original drawing. If not one inch on this sheet, adjust scale.

SHEET C-44
SEQ. 58

ACAD Rel: 24.0s (LMS Tech)
Filename: N:\IF\Drawings\4. Wall\CV-ACC RD-N RET WALL.dwg
Last Saved: 1/10/2022 11:40 AM Saved By: 03952

Plot Date: 1/10/2022 12:05 PM Plot By: 03952 Filename: N:\IF\Drawings\4. Wall\CV-ACC RD-N RET WALL.dwg

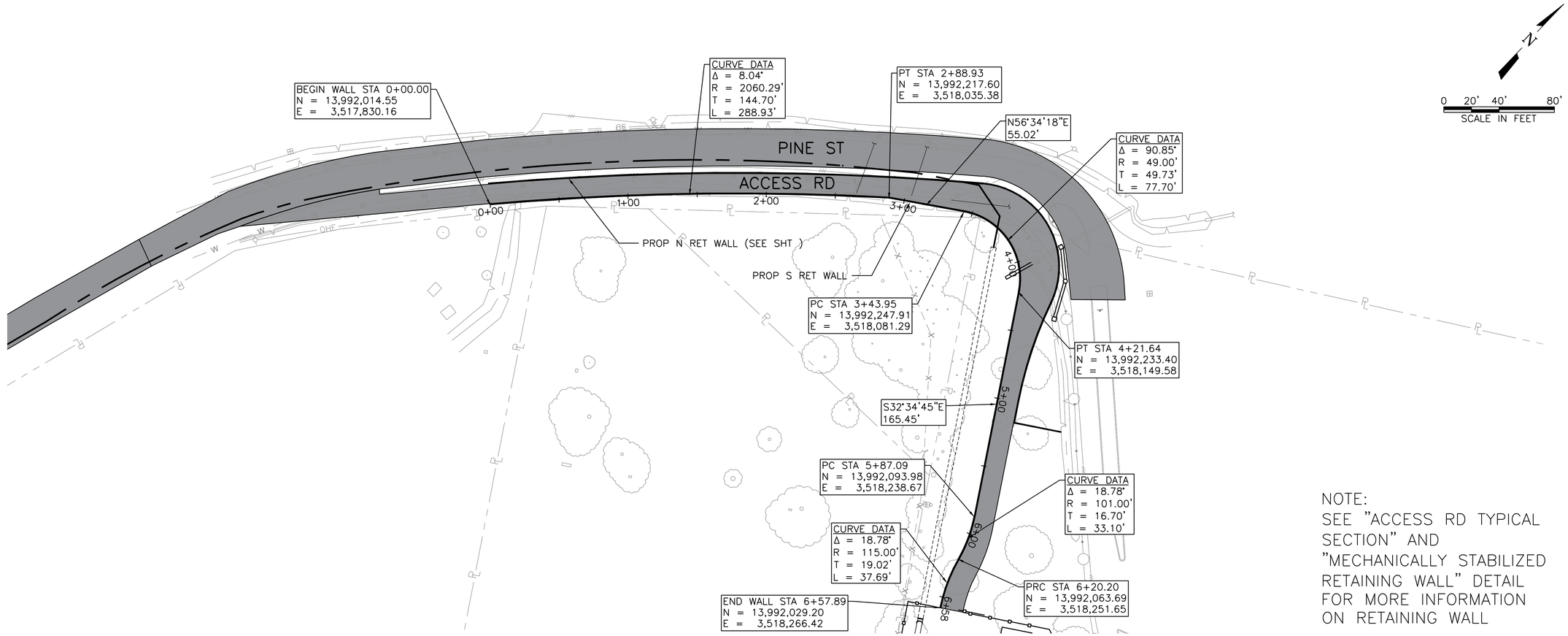

NOTE:
SEE "ACCESS RD TYPICAL SECTION" AND "MECHANICALLY STABILIZED RETAINING WALL" DETAIL FOR MORE INFORMATION ON RETAINING WALL

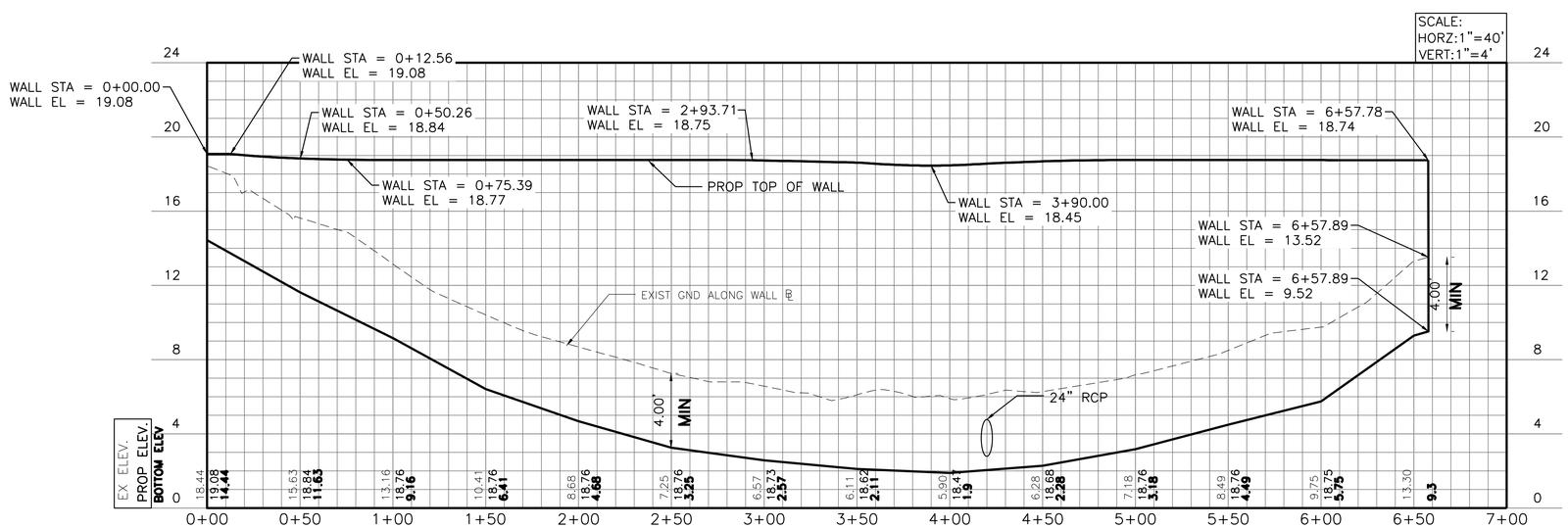

Freese and Nichols, Inc.
Texas Registered Engineering Firm F-2144

STATE OF TEXAS
SCOTT W. KIRBY
93651
LICENSED
PROFESSIONAL ENGINEER
1-10-2022

FREESE AND NICHOLS
10497 Town and Country Way,
Suite 600
Houston, Texas 77024
Phone - (713) 600-6800
Web - www.freese.com

CITY OF BEAUMONT
COLLIER'S FERRY PUMP STATION

ACCESS RD S RETAINING WALL
PLAN AND PROFILE

F&N JOB NO.	BMT20326
DATE	01/07/2022
DESIGNED	RNL
DRAWN	RNL
REVISED	
CHECKED	SWK
FILE NAME	CV-ACC RD-S RET WALL.dwg

NO. | ISSUE | BY | DATE

VERIFY SCALE 0 1
Bar is one inch on original drawing. If not one inch on this sheet, adjust scale.

SHEET C-45
SEQ. 59

ISSUED FOR BID

ACAD Rel: 24.0s (LMS Tech)
Filename: N:\IF\Drawings\4. Wall\CV-ACC RD-S RET WALL.dwg
Last Saved: 1/10/2022 11:40 AM Saved By: 03952

Plot Date: 1/10/2022 12:06 PM Plot By: 03952 Filename: N:\IF\Drawings\4. Wall\CV-ACC RD-S RET WALL.dwg

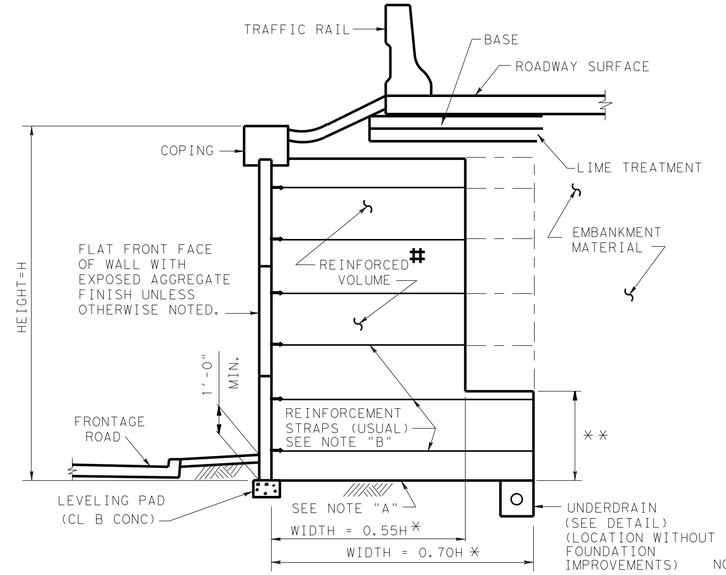

TYPICAL SECTION

(WALL AT BOTTOM OF SLOPE)

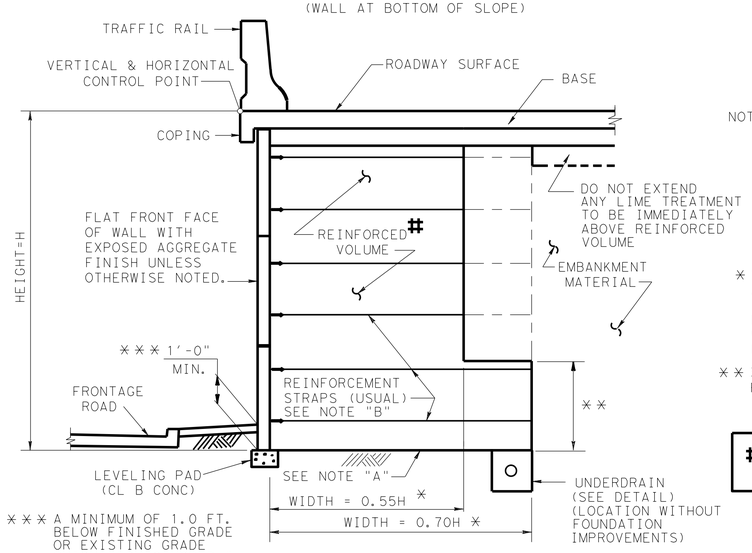

*** A MINIMUM OF 1.0 FT. BELOW FINISHED GRADE OR EXISTING GRADE WHICHEVER IS LOWER."

TYPICAL SECTION

(SHOWING ROADWAY ON WALL)

① FILTER FABRIC MEETING THE REQUIREMENTS OF DMS-6200 TYPE 1.

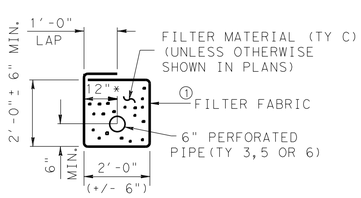

UNDERDRAIN DETAIL

NOTE: LEVEL-UP CONCRETE AND EXPANSION JOINT MATERIAL SHALL BE INCLUDED IN THE COST OF THE RETAINING WALL

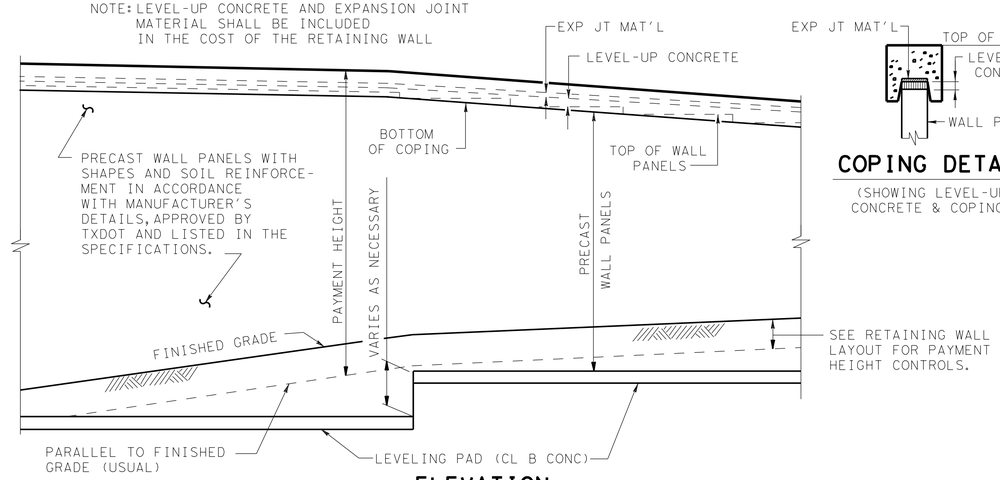

ELEVATION

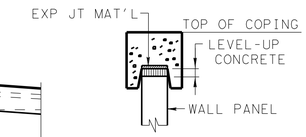

COPING DETAIL

(SHOWING LEVEL-UP CONCRETE & COPING)

NOTE "A":
COMPACT THE SOIL UNDER THE LEVELING PAD AND THE REINFORCED VOLUME INCLUDING A MINIMUM OF TWO (2) FEET IN FRONT OF THE LEVELING PAD TO A MINIMUM OF 98% OF THE MAXIMUM DRY DENSITY, AS PRESENTED IN TEST METHOD TEX-114-E. THE DENSITY TESTING OF THE SOIL WILL BE OUTLINED IN TEST METHOD TEX-115-E. COST OF THIS COMPACTION WILL NOT BE PAID FOR DIRECTLY BUT IS INCIDENTAL TO THE UNIT PRICE BID FOR BID FOR "RETAINING WALL."

NOTE "B":
WHEN BACKFILL DOES NOT COMPLY WITH pH AND RESISTIVITY REQUIREMENTS, USE EPOXY COATED METALLIC REINFORCEMENTS. ALSO EPOXY COAT CONNECTION HARDWARE USED WITH EPOXY COATED REINFORCEMENTS. USE EPOXY CONFORMING TO THE REQUIREMENTS OF THE ITEM, "EPOXY." THIS WORK WILL NOT BE PAID FOR DIRECTLY, BUT IS CONSIDERED INCIDENTAL TO THE UNIT PRICE BID FOR "RETAINING WALL".

* THE CONTRACTOR HAS THE OPTION OF PROVIDING A REINFORCED VOLUME WITH TWO DIFFERENT WIDTHS (0.55H BUT NOT LESS THAN SIX FEET AND 0.70H BUT NOT LESS THAN EIGHT FEET), OR WITH A CONSTANT WIDTH EQUAL TO 0.70H BUT NOT LESS THAN EIGHT FEET AS SHOWN.

** 3 IN. MINIMUM ABOVE THE SECOND COURSE OF SOIL REINFORCEMENTS, BUT NO LESS THAN 4 FEET.

CEMENT STABILIZED BACKFILL REINFORCED VOLUME TO BE PAID AS ITEM 132-6006 EMBANKMENT (FINAL)(DENS CONT)(TY C)

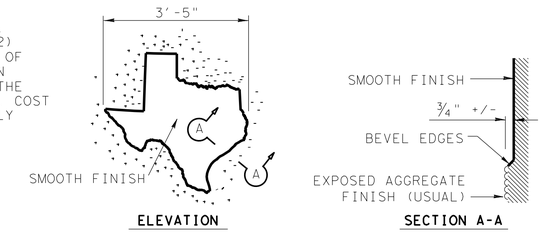

MAP OF TEXAS EMBLEM

(FOR NON - GREEN RIBBON PROJECTS ONLY)

FORM MAP OF TEXAS EMBLEM INTO A WALL PANEL NEXT TO EACH BRIDGE ABUTMENT. PLACE THE EXACT LOCATION OF EACH EMBLEM AS APPROVED BY THE ENGINEER. THE COST OF FORMING THE EMBLEMS WILL NOT BE PAID FOR DIRECTLY, BUT IS CONSIDERED INCIDENTAL TO THE UNIT PRICE BID FOR "RETAINING WALL".

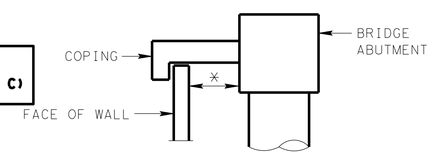

* 2' MINIMUM AND 3' DESIRABLE EDGE DISTANCE FROM BACK OF PANEL TO FRONT OF ABUTMENT.

TYPICAL SECTION

(WALL AT ABUTMENT)

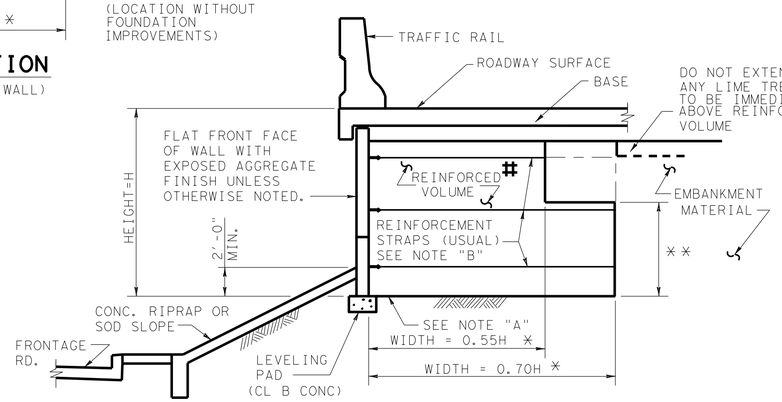

TYPICAL SECTION

(WALL AT TOP OF SLOPE)

NOTES

RAILING AND ROADWAY SLAB ARE PAID FOR UNDER THE APPROPRIATE ROADWAY ITEMS. MODIFICATIONS TO THE RAIL OR ROADWAY SLAB TO FORM COPING ARE CONSIDERED INCIDENTAL TO THE SQUARE FOOT COST OF THE BID ITEM, "RETAINING WALL".

PLACE THE UPPERMOST REINFORCEMENT STRAPS NO MORE THAN 3.5' BELOW THE TOP OF THE WALL. PLACE THE LOWEST LEVEL OF REINFORCEMENT STRAPS NO MORE THAN 2.0' ABOVE THE TOP OF THE LEVELING PAD.

PROVIDE UNDERDRAINS ONLY AT LOCATIONS SHOWN ON THE PLANS. INCLUDE THE COST OF FURNISHING AND INSTALLING UNDERDRAINS IN THE UNIT PRICE BID FOR "RETAINING WALL."

THE REINFORCED VOLUME CONSISTS OF CEMENT STABILIZED BACKFILL IN ACCORDANCE WITH ITEM 132 AND HOUSTON DISTRICT SPECIAL PROVISION (132-001).

PAYMENT HEIGHT SHOWN IN RETAINING WALL LAYOUTS IS CONSIDERED THE MINIMUM HEIGHT TO BE FURNISHED. ADDITIONAL WALL FURNISHED BELOW PAYMENT LINE DUE TO DETAILING OR FABRICATOR DESIGN REQUIREMENTS WILL NOT BE PAID FOR DIRECTLY BUT SHALL BE CONSIDERED INCIDENTAL.

THE CONTRACTOR MAY USE A DIFFERENT TYPE OF TRAFFIC RAIL AND COPING ON RETAINING WALLS IF THE DESIGN AND DETAILS ARE APPROVED BY THE ENGINEER.

WHEN OBSTRUCTIONS (INLETS, DRILLED SHAFTS, PILING, ETC.) PREVENT PLACEMENT OF SOIL REINFORCEMENTS IN THEIR NORMAL LOCATIONS, PROVIDE DETAILS AND CALCULATIONS THAT ESTABLISH SUPPORT FOR THE AFFECTED PANELS. FURNISH THE SAME STEEL AREA OF SOIL REINFORCEMENTS AS THAT REQUIRED IN THE ABSENCE OF THE OBSTRUCTION. PROVIDE CALCULATIONS THAT JUSTIFY ANY ALTERATIONS MADE TO THE SOIL REINFORCEMENTS OR MODIFICATIONS TO THEIR NORMAL PLACEMENT. DO NOT USE PANELS WITHOUT ANY SOIL REINFORCEMENTS CONNECTED TO THEM UNLESS THEY ARE CONNECTED WITH GALVANIZED HARDWARE TO ADJACENT PANELS WHICH DO HAVE SUPPORTING SOIL REINFORCEMENTS ATTACHED TO THEM AND AS APPROVED BY THE ENGINEER.

DESIGN PARAMETERS

BASE RETAINING WALL DESIGN ON THE FOLLOWING DESIGN PATTERNS:

EMBANKMENT MATERIAL (BEHIND CEMENT STABILIZED BACKFILL)	UNIT WEIGHT - 125 PCF Ø = 30°C = 0 PSF KA = 0.333
CEMENT STABILIZED BACKFILL	UNIT WEIGHT = 125 PCF Ø = 45°C = 0 PSF

ALLOWABLE STRESSES IN STEEL AND CONCRETE ARE IN ACCORDANCE WITH CURRENT A.A.S.H.T.O. AND INTERIM SPECIFICATIONS.

THE MINIMUM LENGTH OF REINFORCEMENT STRAPS FOR A 0.55H STEP WALL IS SIX FEET AND FOR A 0.70H WALL IS EIGHT FEET.

EXTERNAL STABILITY CRITERIA

PROVIDE A FACTOR OF SAFETY IN SLIDING ALONG THE BASE OF THE STRUCTURE OF GREATER THAN OR EQUAL TO 1.5.

PROVIDE A FACTOR OF SAFETY IN OVERTURNING OF GREATER THAN OR EQUAL TO 2.0.

THE MAXIMUM ALLOWABLE BEARING PRESSURE IS ½ THE ULTIMATE BEARING CAPACITY OF THE FOUNDATION.

THE WIDTHS SHOWN HEREIN ARE CONSIDERED MINIMUM UNLESS A LARGER WIDTH IS SPECIFIED ON THE WALL PLANS OR REQUIRED BY THE FABRICATOR'S DETAILS.

ENSURE THE BASE PRESSURE RESULTANT FALLS WITHIN THE MIDDLE THIRD OF THE RETAINING WALL.

PROVIDE A FACTOR OF SAFETY AGAINST PULLOUT OF THE EARTH REINFORCEMENTS OF GREATER THAN OR EQUAL TO 1.5 AT EACH LEVEL. DETERMINE PULLOUT RESISTANCE FROM TEST DATA EVALUATED AT ¾ INCH STRAIN.

CORROSION CRITERIA

DESIGN THE EARTH REINFORCEMENT ELEMENTS TO HAVE A CORROSION RESISTANCE DURABILITY TO ENSURE A MINIMUM DESIGN LIFE OF 75 YEARS. COMPUTE THE MAXIMUM LOSS PER SIDE DUE TO CORROSION BY ASSUMING A UNIFORM LOSS MODEL BASED ON THE FOLLOWING:

ZINC CORROSION RATE (FIRST 2 YEARS)	- 15 UM/YR.
ZINC CORROSION RATE (SUBSEQUENT YEARS)	- 4 UM/YR.
CARBON STEEL CORROSION RATE	- 12 UM/YR.

PERFORM STRESS AND PULLOUT CALCULATIONS ON THE CALCULATED EARTH REINFORCEMENT SECTION REMAINING AFTER 75 YEARS.

Texas Department of Transportation
Houston District

MECHANICALLY STABILIZED RETAINING WALL

CEMENT STABILIZED BACKFILL

MSRW-CSB

FILE: STDJ4.DGN	DN:	CK:	DW:	CK:
© TxDOT 2014	DIST	FED REG	PROJECT NO.	SHEET
MAR 2015 - 2014 SPECS	HOU	6		60
	CONTROL	SECT	JOB	HIGHWAY

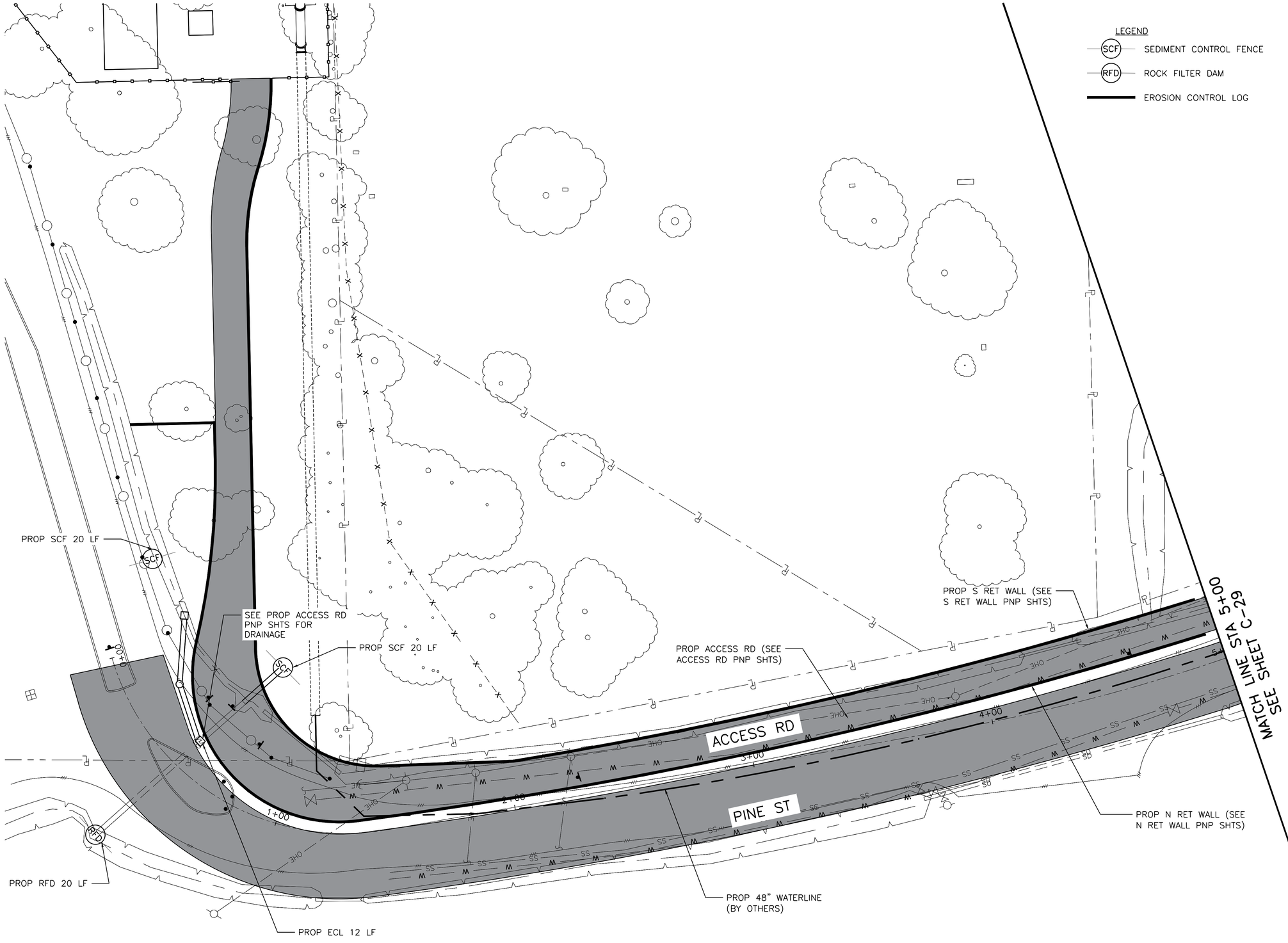

ISSUED FOR BID

Freese and Nichols, Inc.
Texas Registered Engineering Firm F-2144

STATE OF TEXAS
SCOTT W. KIRBY
93651
PROFESSIONAL ENGINEER
LICENSED
1-10-2022

FREESE AND NICHOLS
10497 Town and Country Way,
Suite 600
Houston, Texas 77024
Phone - (713) 600-6800
Web - www.freese.com

CITY OF BEAUMONT
COLLIER'S FERRY PUMP STATION

PINE ST AND ACCESS RD SW3P
STA 0+00 TO STA 5+00

NO.	ISSUE	BY	DATE

F&N JOB NO. BMT20326
DATE 01/07/2022
DESIGNED RNL
DRAWN RNL
REVISED
CHECKED SWK
FILE NAME CV-PINE ST-SW3P.dwg

VERIFY SCALE 0 1
Bar is one inch on original drawing. If not one inch on this sheet, adjust scale.

SHEET C-47
SEQ. 61

ACAD Rel: 24.0s (LMS Tech)
Filename: N:\IF\Drawings\9. Environmental\CV-PINE ST-SW3P.dwg
Last Saved: 1/10/2022 11:43 AM Saved By: 03952

Plot Date: 1/10/2022 12:06 PM Plot By: 03952 Filename: N:\IF\Drawings\9. Environmental\CV-PINE ST-SW3P.dwg

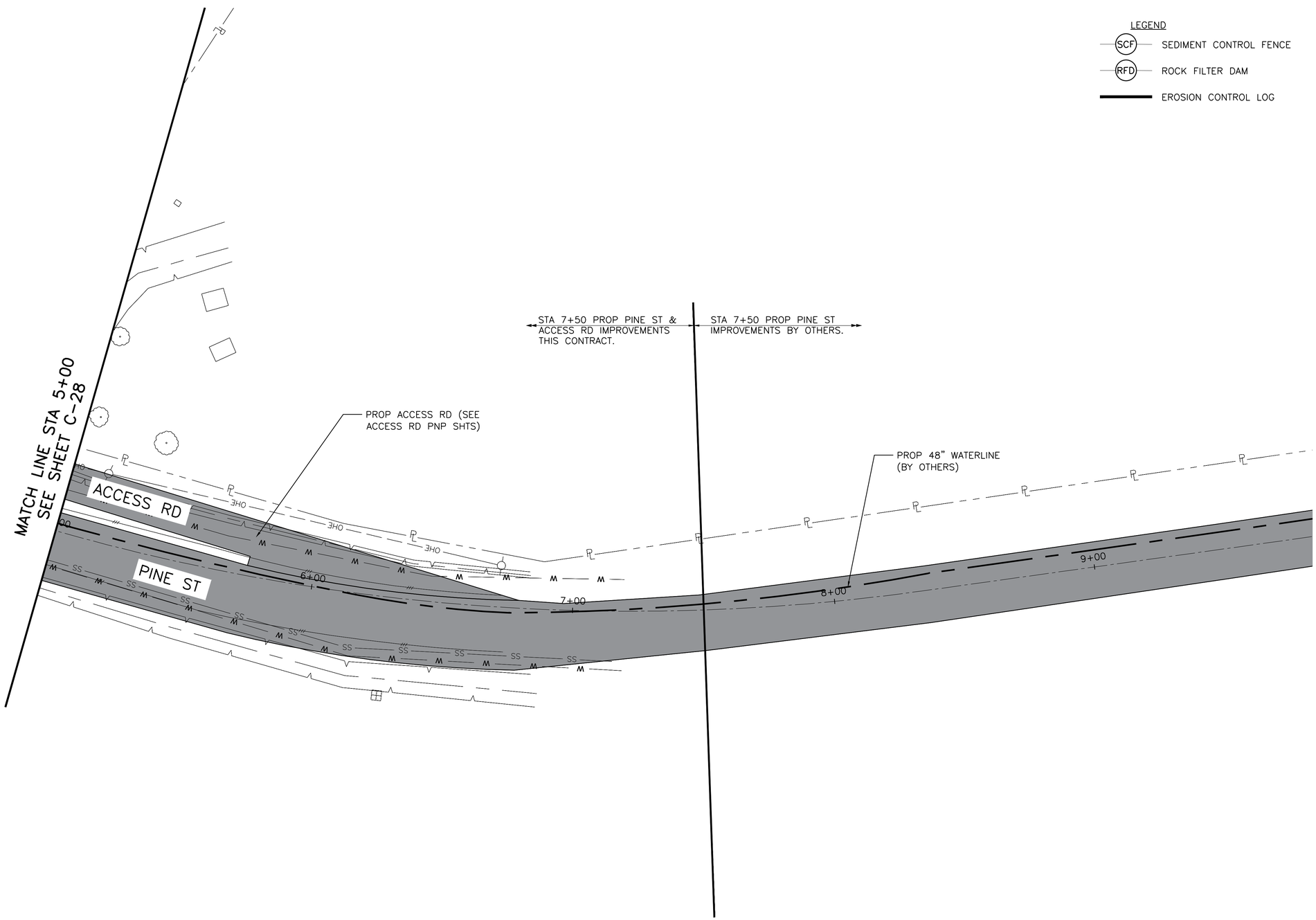

LEGEND

- SCF — SEDIMENT CONTROL FENCE
- RFD — ROCK FILTER DAM
- EROSION CONTROL LOG

N

0 10' 20' 40'
SCALE IN FEET

Freese and Nichols, Inc.
Texas Registered Engineering Firm F-2144

STATE OF TEXAS
SCOTT W. KIRBY
93651
PROFESSIONAL ENGINEER
LICENSED
1-10-2022

FREESE AND NICHOLS

10497 Town and Country Way,
Suite 600
Houston, Texas 77024
Phone - (713) 600-6800
Web - www.freese.com

CITY OF BEAUMONT
COLLIER'S FERRY PUMP STATION

PINE ST AND ACCESS RD SW3P
STA 5+00.00 TO END

NO.	ISSUE	BY	DATE

F&N JOB NO. BMT20326
DATE 01/07/2022
DESIGNED RNL
DRAWN RNL
REVISED
CHECKED SWK
FILE NAME CV-PINE ST-SW3P.dwg

VERIFY SCALE 0 1
Bar is one inch on original drawing. If not one inch on this sheet, adjust scale.

SHEET C-48
SEQ. 62

ISSUED FOR BID

ACAD Rel: 24.0s (LMS Tech)
Filename: N:\IF\Drawings\9. Environmental\CV-PINE ST-SW3P.dwg
Last Saved: 1/10/2022 11:43 AM Saved By: 03952

Plot Date: 1/10/2022 12:06 PM Plot By: 03952 Filename: N:\IF\Drawings\9. Environmental\CV-PINE ST-SW3P.dwg

DISCLAIMER:
The use of this standard is governed by the "Texas Engineering Practice Act". No warranty of any kind is made by TxDOT for any purpose whatsoever. TxDOT assumes no responsibility for the conversion of this standard to other formats or for incorrect results or damages resulting from its use.

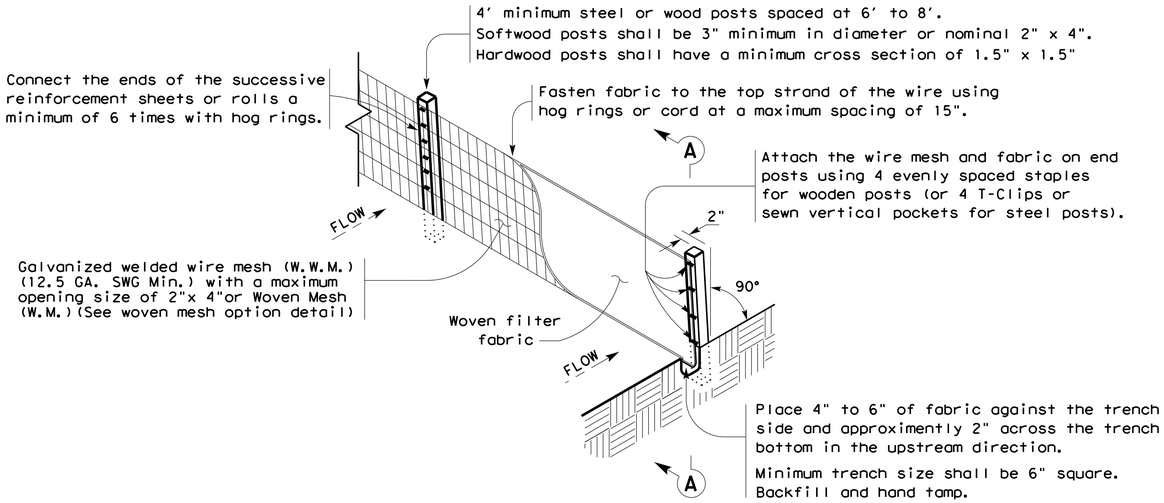

TEMPORARY SEDIMENT CONTROL FENCE

SCF

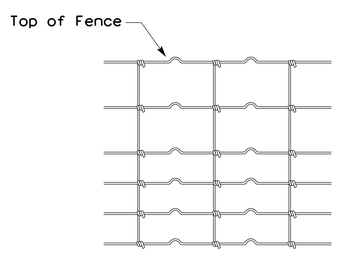

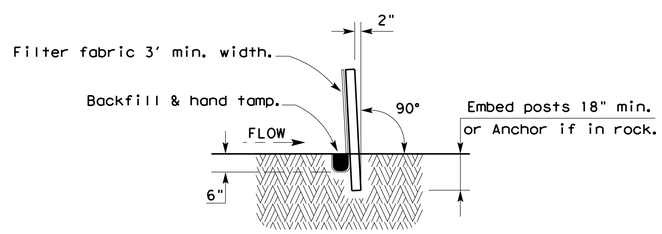

SECTION A-A

HINGE JOINT KNOT WOVEN MESH (OPTION) DETAIL

Galvanized hinge joint knot woven mesh (12.5 GA.SWG Min.) requires a minimum of five horizontal wires spaced at a maximum of 12 inches apart and all vertical wires spaced at a maximum of 12 inches apart.

SEDIMENT CONTROL FENCE USAGE GUIDELINES

A sediment control fence may be constructed near the downstream perimeter of a disturbed area along a contour to intercept sediment from overland runoff. A 2 year storm frequency may be used to calculate the flow rate to be filtered.

Sediment control fence should be sized to filter a maximum flow through rate of 100 GPM/FT^2. Sediment control fence is not recommended to control erosion from a drainage area larger than 2 acres.

LEGEND

Sediment Control Fence

SCF

GENERAL NOTES

1. Vertical tracking is required on projects where soil distributing activities have occurred unless otherwise approved.
2. Perform vertical tracking on slopes to temporarily stabilize soil.
3. Provide equipment with a track undercarriage capable of producing linear soil impressions measuring a minimum of 12" in length by 2" to 4" in width by 1/2" to 2" in depth.
4. Do not exceed 12" between track impressions.
5. Install continous linear track impressions where the minimum 12" length impressions are perpendicular to the slope or direction of water flow.

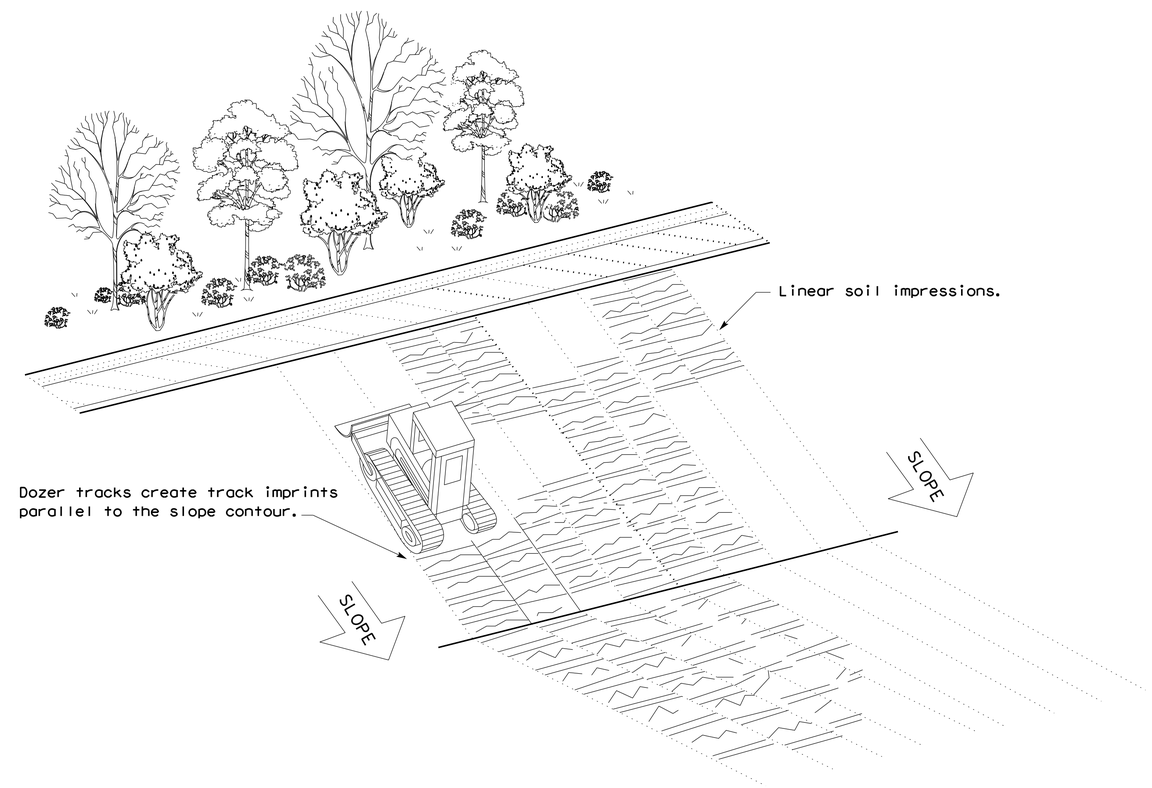

VERTICAL TRACKING

Texas Department of Transportation

Design Division Standard

TEMPORARY EROSION, SEDIMENT AND WATER POLLUTION CONTROL MEASURES

FENCE & VERTICAL TRACKING

EC(1)-16

FILE: ec116	DN: TxDOT	CK: KM	DW: VP	DN/CK: LS
© TxDOT: JULY 2016	CONT	SECT	JOB	HIGHWAY
REVISIONS				
	DIST	COUNTY		SHEET NO.
				63

DATE
FILE

DISCLAIMER:
The use of this standard is governed by the "Texas Engineering Practice Act". No warranty of any kind is made by TxDOT for any purpose whatsoever. TxDOT assumes no responsibility for the conversion of this standard to other formats or for incorrect results or damages resulting from its use.

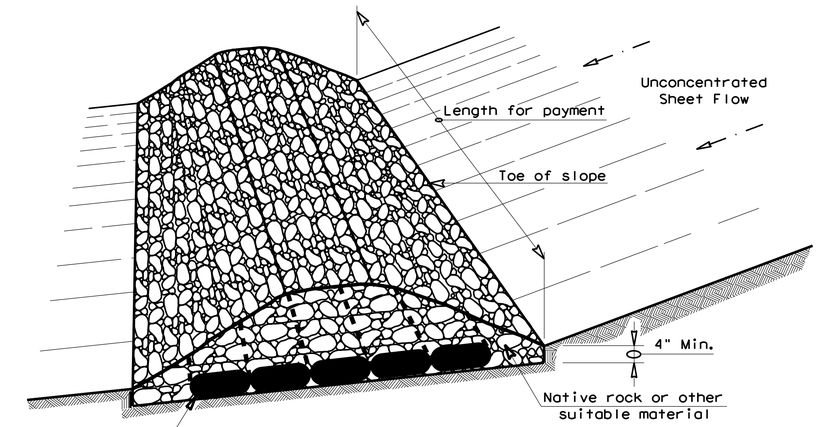

FILTER DAM AT TOE OF SLOPE

RFD1

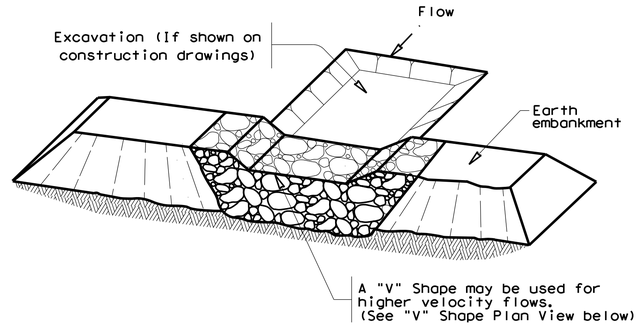

FILTER DAM AT SEDIMENT TRAP

RFD1 OR RFD2

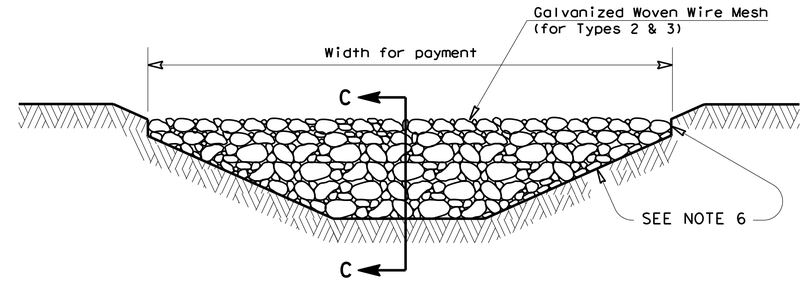

FILTER DAM AT CHANNEL SECTIONS

RFD1 OR RFD2 OR RFD3

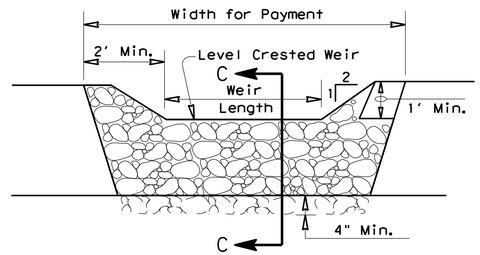

PROFILE

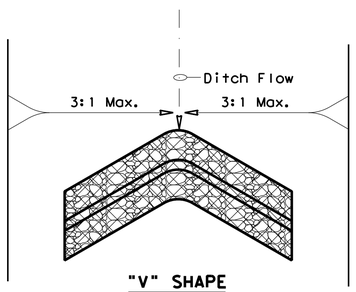

"V" SHAPE
PLAN VIEW

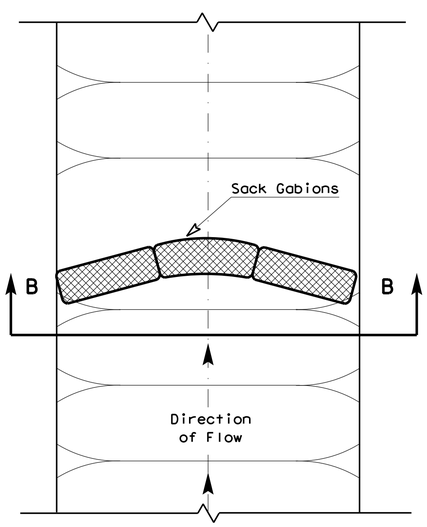

PLAN VIEW

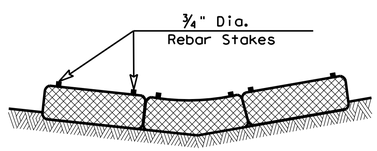

SECTION B-B

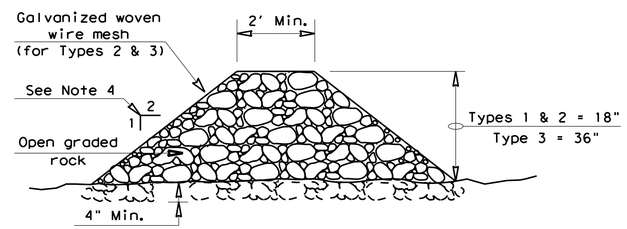

SECTION C-C

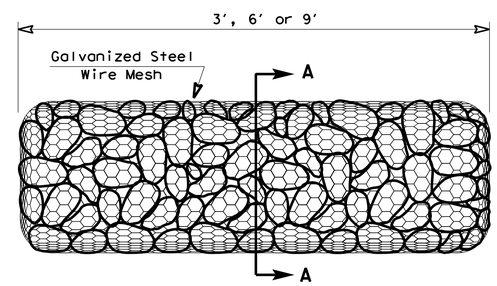

TYPE 4 (SACK GABIONS)

RFD4

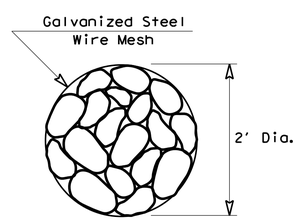

SECTION A-A

ROCK FILTER DAM USAGE GUIDELINES

Rock Filter Dams should be constructed downstream from disturbed areas to intercept sediment from overland runoff and/or concentrated flow. The dams should be sized to filter a maximum flow through rate of 60 GPM/FT^2 of cross sectional area. A 2 year storm frequency may be used to calculate the flow rate.

Type 1 (18" high with no wire mesh) (3" to 6" aggregate): Type 1 may be used at the toe of slopes, around inlets, in small ditches, and at dike or swale outlets. This type of dam is recommended to control erosion from a drainage area of 5 acres or less. Type 1 may not be used in concentrated high velocity flows (approximently 8 Ft/Sec or more) in which aggregate wash out may occur. Sandbags may be used at the embedded foundation (4" deep min.) for better filtering efficiency of low flows if called for on the plans or directed by the Engineer.

Type 2 (18" high with wire mesh) (3" to 6" aggregate): Type 2 may be used in ditches and at dike or swale outlets.

Type 3 (36" high with wire mesh) (4" to 8" aggregate): Type 3 may be used in stream flow and should be secured to the stream bed.

Type 4 (Sack gabions) (3" to 6" aggregate): Type 4 May be used in ditches and smaller channels to form an erosion control dam.

Type 5: Provide rock filter dams as shown on plans.

GENERAL NOTES

1. If shown on the plans or directed by the Engineer, filter dams should be placed near the toe of slopes where erosion is anticipated, upstream and/or downstream at drainage structures, and in roadway ditches and channels to collect sediment.
2. Materials (aggregate, wire mesh, sandbags, etc.) shall be as indicated by the specification for "Rock Filter Dams for Erosion and Sedimentation Control".
3. The rock filter dam dimensions shall be as indicated on the SW3P plans.
4. Side slopes should be 2:1 or flatter. Dams within the safety zone shall have sideslopes of 6:1 or flatter.
5. Maintain a minimum of 1' between top of rock filter dam weir and top of embankment for filter dams at sediment traps.
6. Filter dams should be embedded a minimum of 4" into existing ground.
7. The sediment trap for ponding of sediment laden runoff shall be of the dimensions shown on the plans.
8. Rock filter dam types 2 & 3 shall be secured with 20 gauge galvanized woven wire mesh with 1" diameter hexagonal openings. The aggregate shall be placed on the mesh to the height & slopes specified. The mesh shall be folded at the upstream side over the aggregate and tightly secured to itself on the downstream side using wire ties or hog rings. For in stream use, the mesh should be secured or staked to the stream bed prior to aggregate placement.
9. Sack Gabions should be staked down with ¾" dia. rebar stakes, and have a double-twisted hexagonal weave with a nominal mesh opening of 2 ½" x 3 ¼"
10. Flow outlet should be onto a stabilized area (vegetation, rock, etc.).
11. The guidelines shown hereon are suggestions only and may be modified by the Engineer.

PLAN SHEET LEGEND

Type 1 Rock Filter Dam	RFD1
Type 2 Rock Filter Dam	RFD2
Type 3 Rock Filter Dam	RFD3
Type 4 Rock Filter Dam	RFD4

Texas Department of Transportation — Design Division Standard

TEMPORARY EROSION, SEDIMENT AND WATER POLLUTION CONTROL MEASURES

ROCK FILTER DAMS

EC(2)-16

FILE: ec216	DN: TxDOT	CK: KM	DW: VP	DN/CK: LS
© TxDOT: JULY 2016	CONT	SECT	JOB	HIGHWAY
REVISIONS				
	DIST	COUNTY		SHEET NO.
				64

DATE:
FILE:

DISCLAIMER:
The use of this standard is governed by the "Texas Engineering Practice Act". No warranty of any kind is made by TxDOT for any purpose whatsoever. TxDOT assumes no responsibility for the conversion of this standard to other formats or for incorrect results or damages resulting from its use.

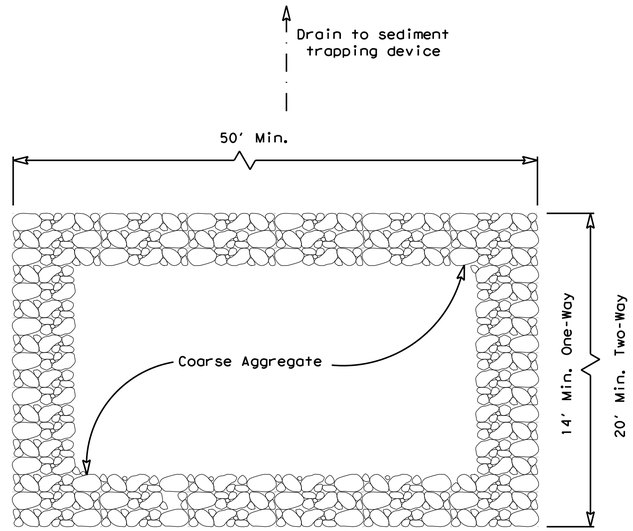

PLAN VIEW

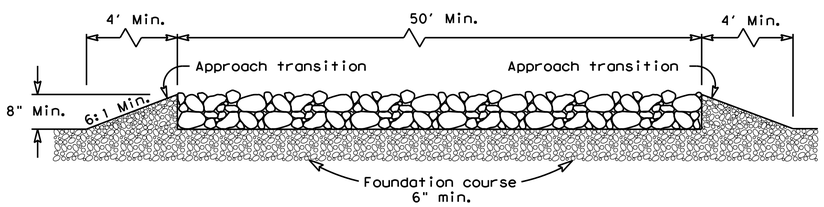

ELEVATION VIEW

CONSTRUCTION EXIT (TYPE 1)

ROCK CONSTRUCTION (LONG TERM)

GENERAL NOTES (TYPE 1)

1. The length of the type 1 construction exit shall be as indicated on the plans, but not less than 50'.
2. The coarse aggregate should be open graded with a size of 4" to 8".
3. The approach transitions should be no steeper than 6:1 and constructed as directed by the Engineer.
4. The construction exit foundation course shall be flexible base, bituminous concrete, portland cement concrete or other materialas approved by the Engineer.
5. The construction exit shall be graded to allow drainage to a sediment trapping device.
6. The guidelines shown hereon are suggestions only and may be modified by the Engineer.
7. Construct exits with a width of at least 14 ft. for one-way and 20 ft. for two-way traffic for the full width of the exit, or as directed by the engineer.

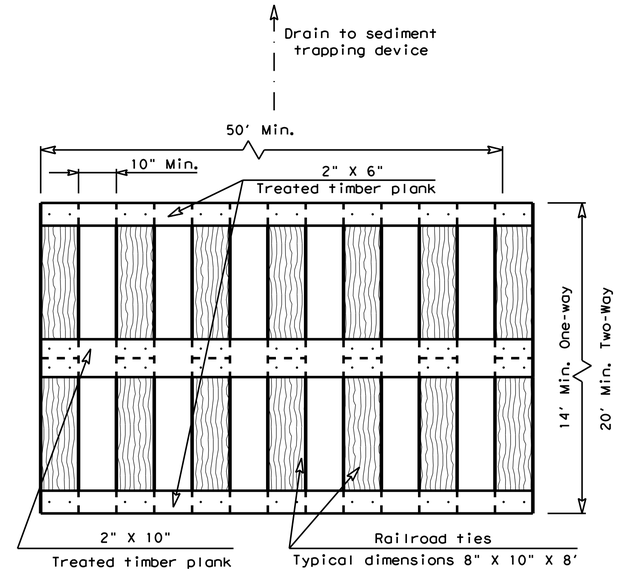

PLAN VIEW

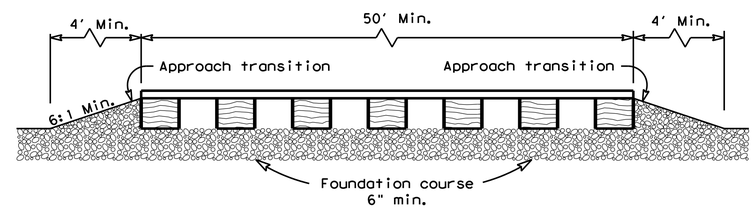

ELEVATION VIEW

CONSTRUCTION EXIT (TYPE 2)

TIMBER CONSTRUCTION (LONG TERM)

GENERAL NOTES (TYPE 2)

1. The length of the type 2 construction exit shall be as indicated on the plans, but not less than 50'.
2. The treated timber planks shall be attached to the railroad ties with ½"x 6" min. lag bolts. Other fasteners may be used as approved by the Engineer.
3. The treated timber planks shall be #2 grade min., and should be free from large and loose knots.
4. The approach transitions shall be no steeper than 6:1 and constructed as directed by the Engineer.
5. The construction exit foundation course shall be flexible base, bituminous concrete, portland cement concrete or other material as approved by the Engineer.
6. The construction exit should be graded to allow drainage to a sediment trapping device.
7. The guidelines shown hereon are suggestions only and may be modified by the Engineer.
8. Construct exits with a width of at least 14 ft. for one-way and 20 ft. for two-way traffic for the full width of the exit, or as directed by the engineer.

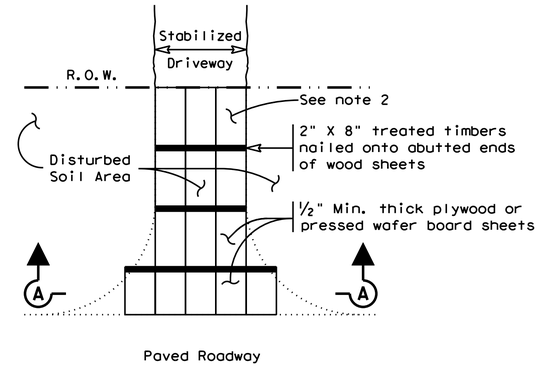

PLAN VIEW

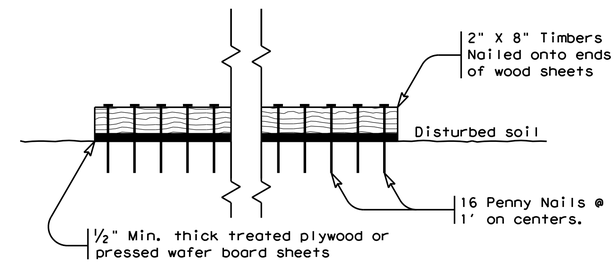

SECTION A-A

CONSTRUCTION EXIT (TYPE 3)

SHORT TERM

GENERAL NOTES (TYPE 3)

1. The length of the type 3 construction exit shall be as shown on the plans, or as directed by the Engineer.
2. The type 3 construction exit may be constructed from open graded crushed stone with a size of two to four inches spread a min. of 4" thick to the limits shown on the plans.
3. The treated timber planks shall be #2 grade min., and should be free from large and loose knots.
4. The guidelines shown hereon are suggestions only and may be modified by the Engineer.

Texas Department of Transportation — Design Division Standard

TEMPORARY EROSION, SEDIMENT AND WATER POLLUTION CONTROL MEASURES

CONSTRUCTION EXITS

EC(3)-16

FILE: ec316	DN: TxDOT	CK: KM	DW: VP	DN/CK: LS
©TxDOT: JULY 2016	CONT	SECT	JOB	HIGHWAY
REVISIONS				
	DIST	COUNTY		SHEET NO.
				65

DATE: $DATE$
FILE: $FILE$

DISCLAIMER:
The use of this standard is governed by the "Texas Engineering Practice Act". No warranty of any kind is made by TxDOT for any purpose whatsoever. TxDOT assumes no responsibility for the conversion of this standard to other formats or for incorrect results or damages resulting from its use.

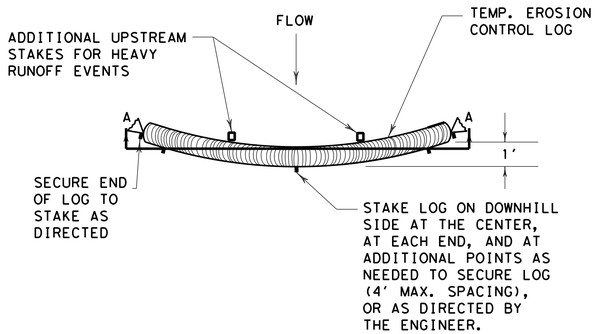

PLAN VIEW

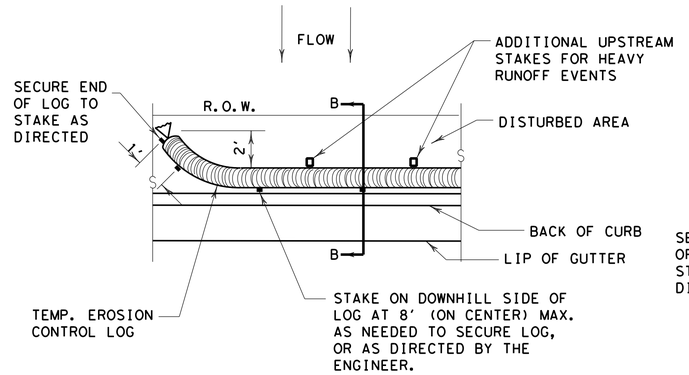

PLAN VIEW

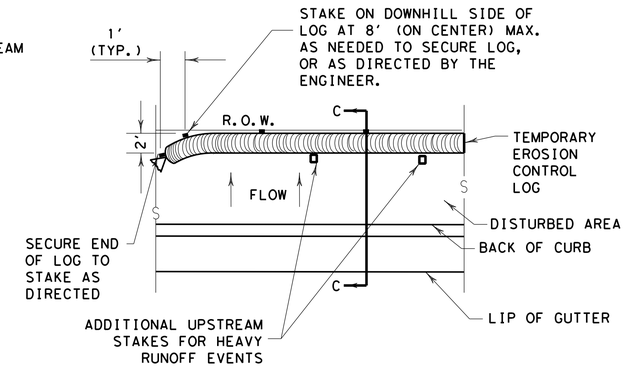

PLAN VIEW

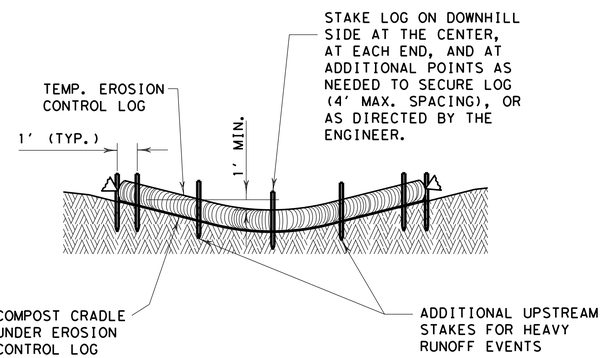

SECTION A-A

EROSION CONTROL LOG DAM

CL-D

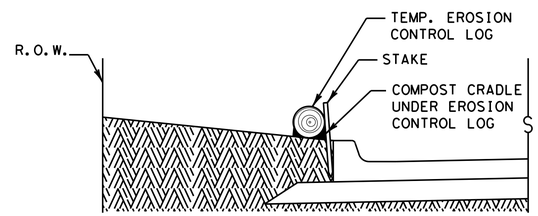

SECTION B-B

EROSION CONTROL LOG AT BACK OF CURB

CL-BOC

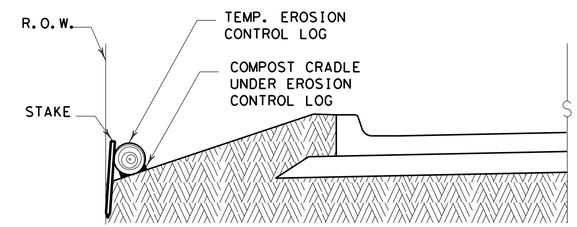

SECTION C-C

EROSION CONTROL LOG AT EDGE OF RIGHT-OF-WAY

CL-ROW

GENERAL NOTES:

1. EROSION CONTROL LOGS SHALL BE INSTALLED IN ACCORDANCE WITH MANFACTURER'S RECOMMENDATIONS, OR AS DIRECTED BY THE ENGINEER.
2. LENGTHS OF EROSION CONTROL LOGS SHALL BE IN ACCORDANCE WITH MANUFACTURER'S RECOMMENDATIONS AND AS REQUIRED FOR THE PURPOSE INTENDED.
3. UNLESS OTHERWISE DIRECTED, USE BIODEGRADABLE OR PHOTODEGRADABLE CONTAINMENT MESH ONLY WHERE LOG WILL REMAIN IN PLACE AS PART OF A VEGETATIVE SYSTEM. FOR TEMPORARY INSTALLATIONS, USE RECYCLABLE CONTAINMENT MESH.
4. FILL LOGS WITH SUFFICIENT FILTER MATERIAL TO ACHIEVE THE MINIMUM COMPACTED DIAMETER SPECIFIED IN THE PLANS WITHOUT EXCESSIVE DEFORMATION.
5. STAKES SHALL BE 2" X 2" WOOD OR #3 REBAR, 2'-4' LONG, EMBEDDED SUCH THAT 2" PROTRUDES ABOVE LOG, OR AS DIRECTED BY THE ENGINEER.
6. DO NOT PLACE STAKES THROUGH CONTAINMENT MESH.
7. COMPOST CRADLE MATERIAL IS INCIDENTAL & WILL NOT BE PAID FOR SEPARATELY.
8. SANDBAGS USED AS ANCHORS SHALL BE PLACED ON TOP OF LOGS & SHALL BE OF SUFFICIENT SIZE TO HOLD LOGS IN PLACE.
9. TURN THE ENDS OF EACH ROW OF LOGS UPSLOPE TO PREVENT RUNOFF FROM FLOWING AROUND THE LOG.
10. FOR HEAVY RUNOFF EVENTS, ADDITIONAL UPSTREAM STAKES MAY BE NECESSARY TO KEEP LOG FROM FOLDING IN ON ITSELF.

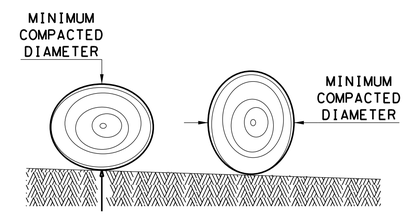

DIAMETER MEASUREMENTS OF EROSION CONTROL LOGS SPECIFIED IN PLANS

LEGEND

- CL-D — EROSION CONTROL LOG DAM
- CL-BOC — EROSION CONTROL LOG AT BACK OF CURB
- CL-ROW — EROSION CONTROL LOG AT EDGE OF RIGHT-OF-WAY
- CL-SST — EROSION CONTROL LOGS ON SLOPES STAKE AND TRENCHING ANCHORING
- CL-SSL — EROSION CONTROL LOGS ON SLOPES STAKE AND LASHING ANCHORING
- CL-DI — EROSION CONTROL LOG AT DROP INLET
- CL-CI — EROSION CONTROL LOG AT CURB INLET
- CL-GI — EROSION CONTROL LOG AT CURB & GRATE INLET

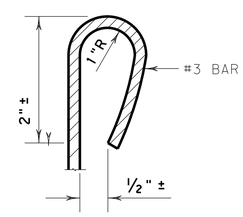

REBAR STAKE DETAIL

SEDIMENT BASIN & TRAP USAGE GUIDELINES

An erosion control log sediment trap may be used to filter sediment out of runoff draining from an unstabilized area.

Log Traps: The drainage area for a sediment trap should not exceed 5 acres. The trap capacity should be 1800 CF/Acre (0.5" over the drainage area).

Control logs should be placed in the following locations:

1. Within drainage ditches spaced as needed or min. 500' on center
2. Immediately preceding ditch inlets or drain inlets
3. Just before the drainage enters a water course
4. Just before the drainage leaves the right of way
5. Just before the drainage leaves the construction limits where drainage flows away from the project.

The logs should be cleaned when the sediment has accumulated to a depth of 1/2 the log diameter.

Cleaning and removal of accumulated sediment deposits is incidental and will not be paid for separately.

SHEET 1 OF 3

Texas Department of Transportation — Design Division Standard

TEMPORARY EROSION, SEDIMENT AND WATER POLLUTION CONTROL MEASURES

EROSION CONTROL LOG

EC(9)-16

FILE: ec916	DN: TxDOT	CK: KM	DW: LS/PT	CK: LS
© TxDOT: JULY 2016	CONT	SECT	JOB	HIGHWAY
REVISIONS				
	DIST	COUNTY		SHEET NO.
				66

DATE:
FILE:

DISCLAIMER:
The use of this standard is governed by the "Texas Engineering Practice Act". No warranty of any kind is made by TxDOT for any purpose whatsoever. TxDOT assumes no responsibility for the conversion of this standard to other formats or for incorrect results or damages resulting from its use.

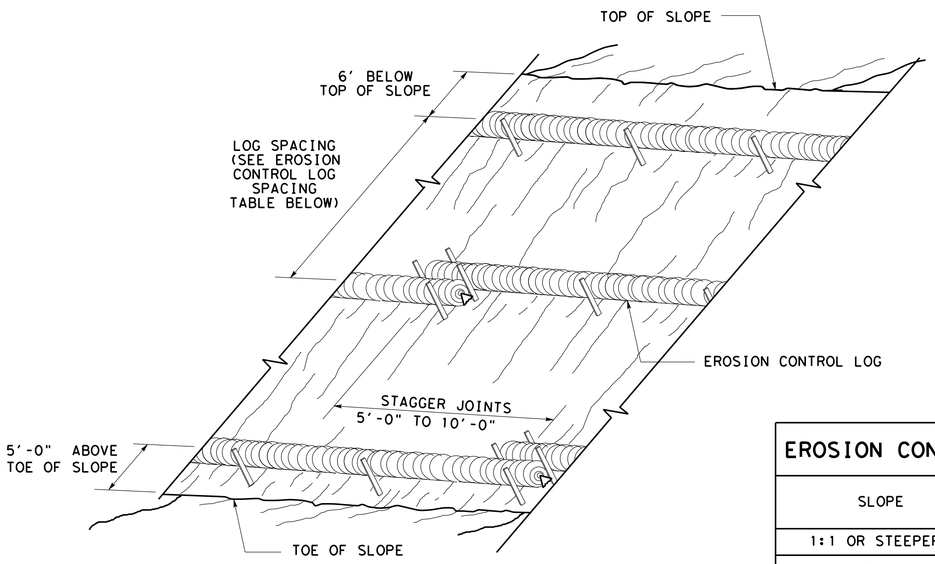

EROSION CONTROL LOGS ON SLOPES
STAKE AND TRENCHING ANCHORING

CL-SST

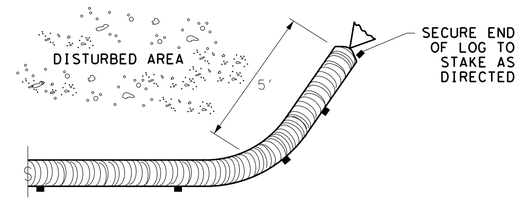

END SECTION RAP DETAIL

EROSION CONTROL LOG SPACING TABLE				
SLOPE	LOG DIAMETER			
	6"	8"	12"	18"
1:1 OR STEEPER	5'	10'	15'	20'
2:1	10'	20'	30'	40'
3:1	15'	30'	45'	60'
4:1 OR FLATTER	20'	40'	60'	80'

* ADJUSTMENTS CAN BE MADE FOR SOIL TYPE:
SOFT, LOAMY SOILS-ADJUST ROWS CLOSER TOGETHER;
HARD, ROCKY SOILS- ADJUST ROWS FARTHER APART

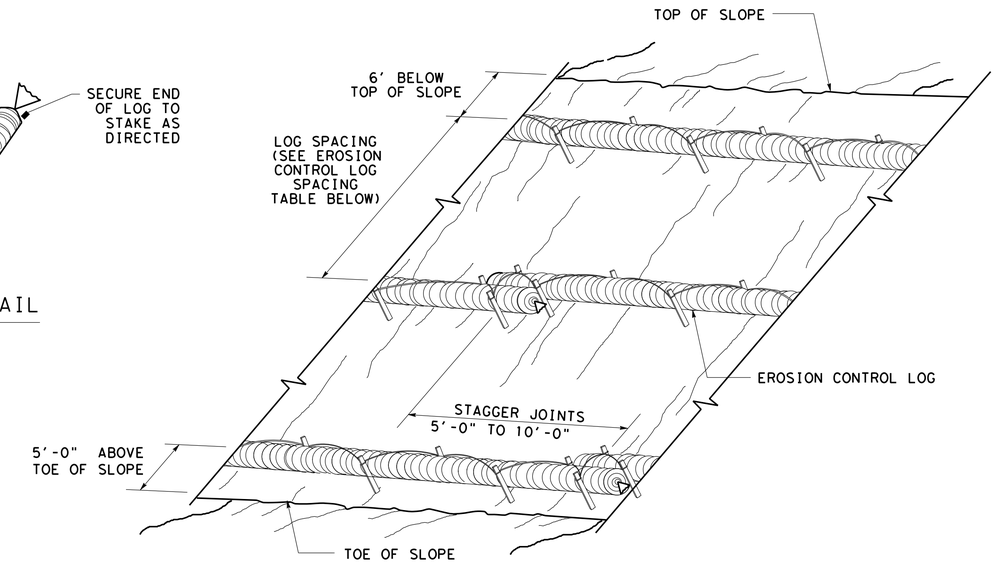

EROSION CONTROL LOGS ON SLOPES
STAKE AND LASHING ANCHORING

CL-SSL

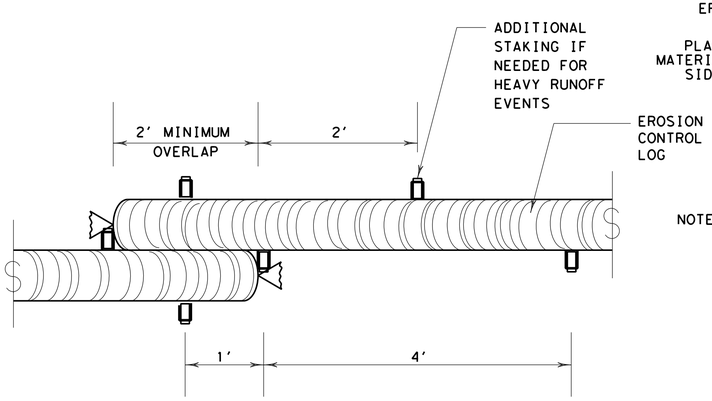

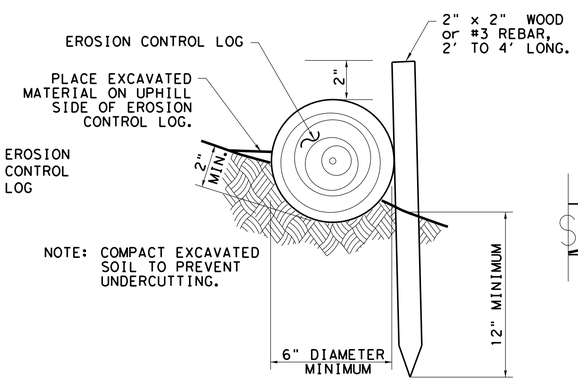

STAKE AND TRENCHING ANCHORING DETAIL

CL-SST

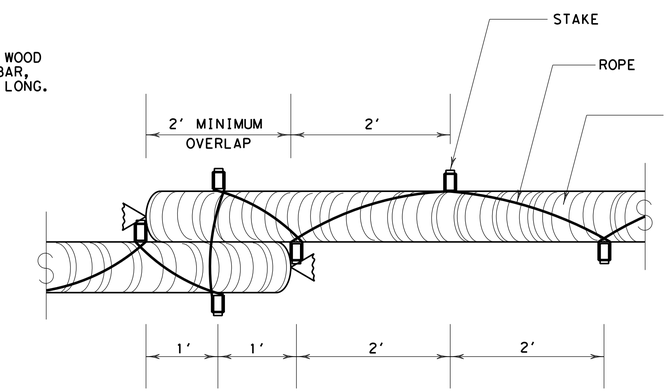

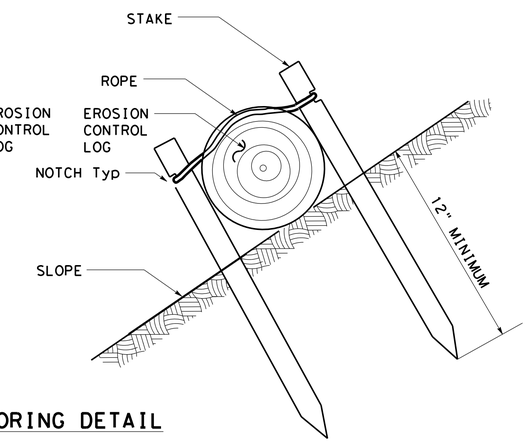

STAKE AND LASHING ANCHORING DETAIL

CL-SSL

TRENCH DEPTH TABLE	
LOG DIAMETER	DEPTH
6"	2"
8"	3"
12"	4"
18"	5"

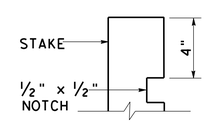

STAKE NOTCH DETAIL

SHEET 2 OF 3

Texas Department of Transportation

Design Division Standard

TEMPORARY EROSION, SEDIMENT AND WATER POLLUTION CONTROL MEASURES
EROSION CONTROL LOG
EC(9)-16

FILE: ec116	DN: TxDOT	CK: KM	DW: LS/PT	CK: LS
© TxDOT: JULY 2016	CONT	SECT	JOB	HIGHWAY
REVISIONS				
	DIST	COUNTY		SHEET NO.
				67

DATE:
FILE:

DISCLAIMER:
The use of this standard is governed by the "Texas Engineering Practice Act". No warranty of any kind is made by TxDOT for any purpose whatsoever. TxDOT assumes no responsibility for the conversion of this standard to other formats or for incorrect results or damages resulting from its use.

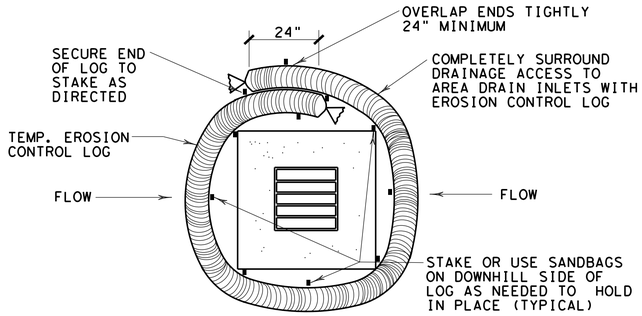

EROSION CONTROL LOG AT DROP INLET

CL-DI

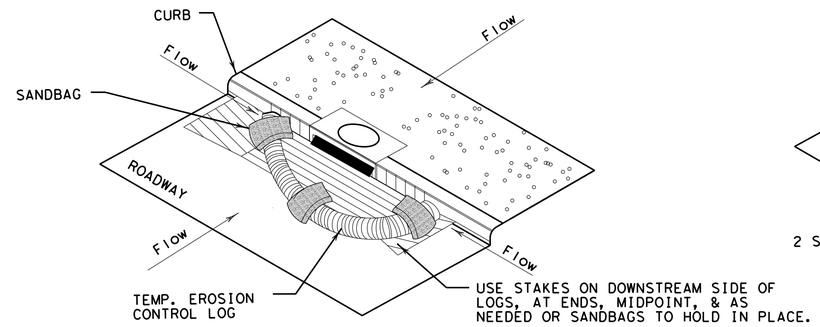

EROSION CONTROL LOG AT CURB INLET

CL-CI

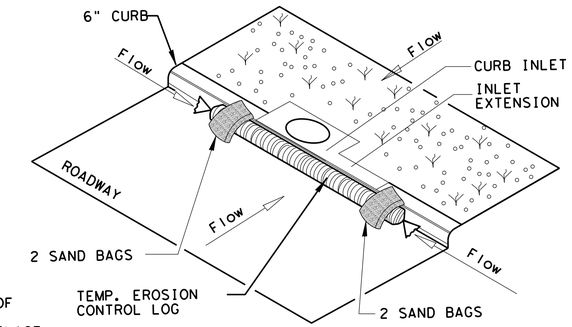

EROSION CONTROL LOG AT CURB INLET

CL-CI

NOTE:
EROSION CONTROL LOGS USED AT CURB INLETS SHOULD ONLY BE USED IF THEY WILL NOT IMPEDE TRAFFIC OR FLOOD THE ROADWAY OR WHEN THE STORM SEWER SYSTEM IS NOT FULLY FUNCTIONAL.

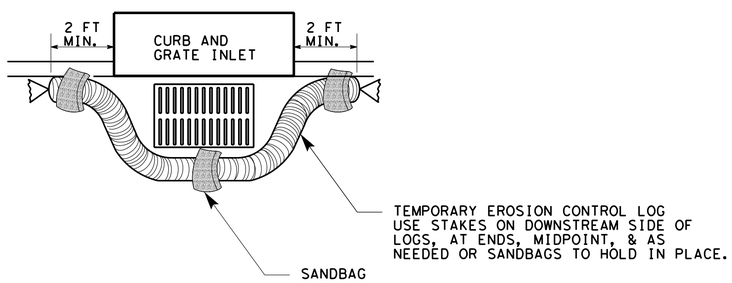

EROSION CONTROL LOG AT CURB & GRADE INLET

CL-GI

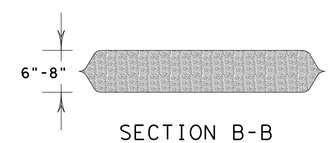

SECTION B-B

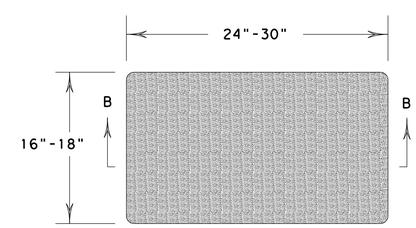

SANDBAG DETAIL

SHEET 3 OF 3

Texas Department of Transportation

Design Division Standard

TEMPORARY EROSION, SEDIMENT AND WATER POLLUTION CONTROL MEASURES

EROSION CONTROL LOG

EC(9)-16

FILE: ec916	DN: TxDOT	CK: KM	DW: LS/PT	CK: LS
© TxDOT: JULY 2016	CONT	SECT	JOB	HIGHWAY
REVISIONS				
	DIST	COUNTY		SHEET NO.
				68

DATE:
FILE:

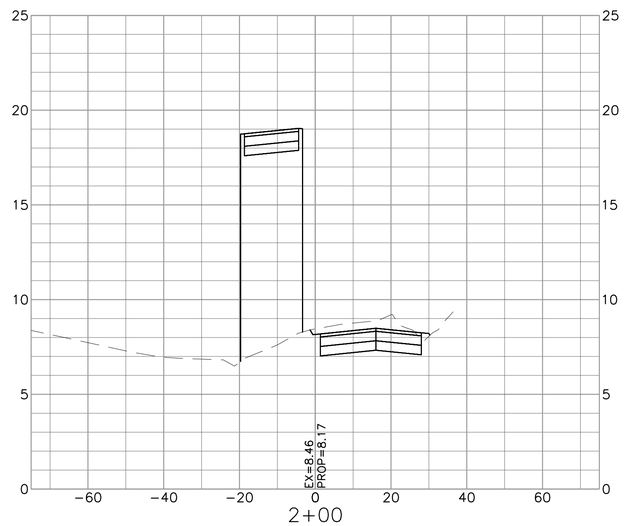

2+00

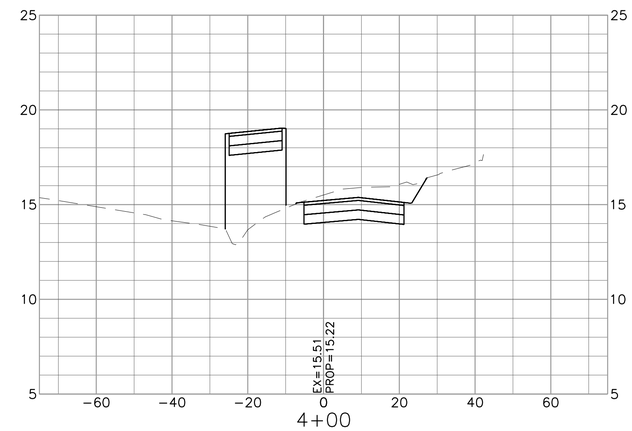

4+00

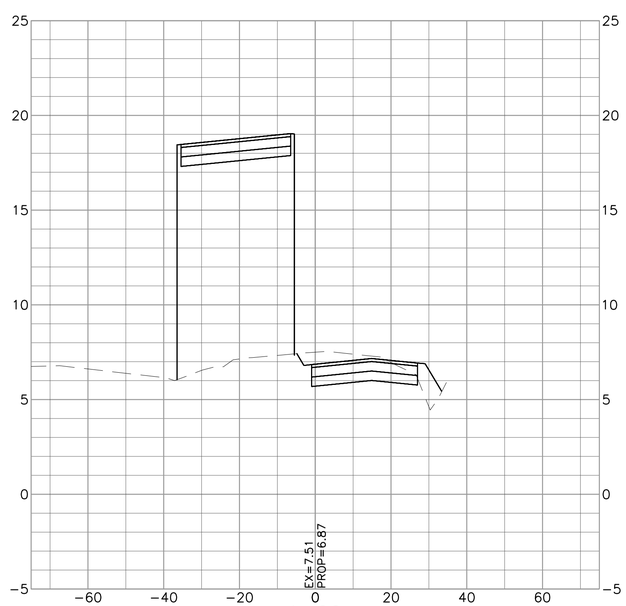

1+00

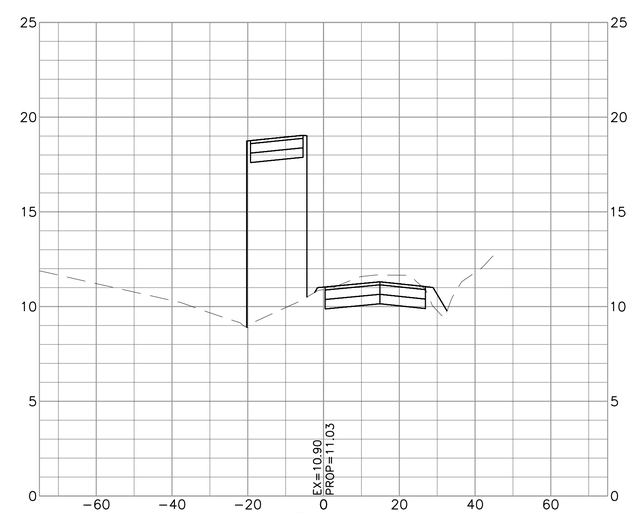

3+00

0 10' 20' 40'
HORIZ SCALE IN FEET

0 2' 4' 8'
VERT SCALE IN FEET

ISSUED FOR BID

Freese and Nichols, Inc.
Texas Registered Engineering Firm F-2144

STATE OF TEXAS
SCOTT W. KIRBY
93651
LICENSED
PROFESSIONAL ENGINEER
ORIGINAL

1-10-2022

FREESE AND NICHOLS

10497 Town and Country Way,
Suite 600
Houston, Texas 77024
Phone - (713) 600-6800
Web - www.freese.com

CITY OF BEAUMONT

COLLIER'S FERRY PUMP STATION

PINE ST CROSS-SECTIONS
STA 1+00 TO STA 4+00

NO.	ISSUE	BY	DATE

F&N JOB NO. BMT20326
DATE 01/07/2022
DESIGNED RNL
DRAWN RNL
REVISED
CHECKED SWK

FILE NAME CORRIDOR.dwg

VERIFY SCALE 0 1
Bar is one inch on original drawing. If not one inch on this sheet, adjust scale.

SHEET C-55
SEQ. 69

ACAD Rel: 24.0s (LMS Tech)
Filename: N:\ENG\CORRIDOR.dwg
Last Saved: 1/10/2022 12:45 PM Saved By: rnl

Plot Date: 1/10/2022 2:38 PM Plot By: rnl Filename: N:\ENG\CORRIDOR.dwg

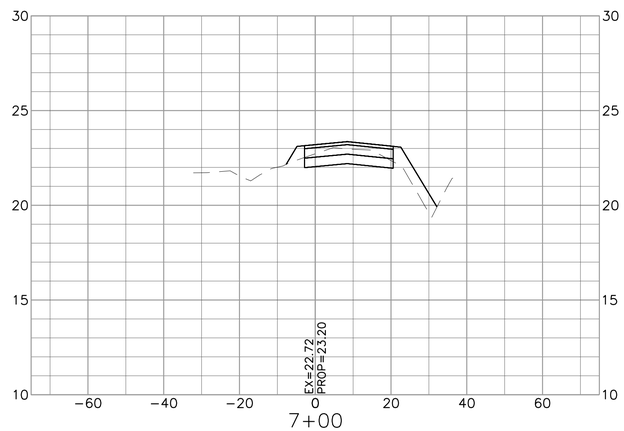

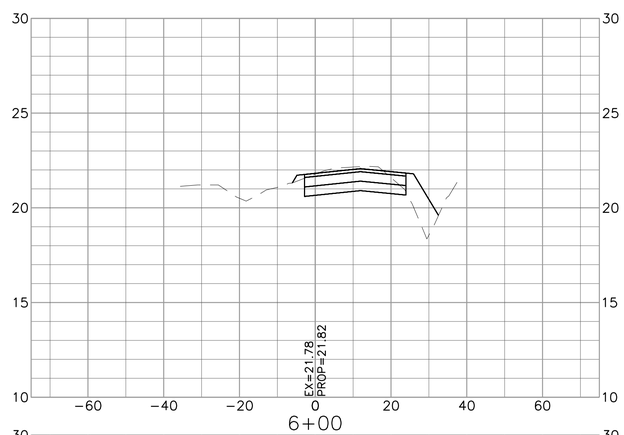

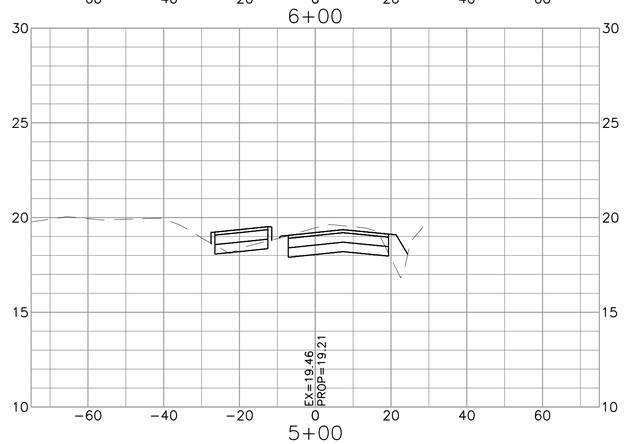

0 10' 20' 40'
HORIZ SCALE IN FEET

0 2' 4' 8'
VERT SCALE IN FEET

CL PINE ST ROW (1)
Total Volume Table

Station	Cut Area	Fill Area	Cut Vol	Fill Vol	Cum Cut Vol	Cum Fill Vol	Net Vol
1+00.00	38.89	8.26	0.00	0.00	0.00	0.00	0.00
2+00.00	41.05	0.62	156.41	18.74	156.41	18.74	137.67
3+00.00	37.65	4.18	145.74	8.91	302.15	27.65	274.50
4+00.00	48.16	0.02	159.44	7.85	461.59	35.50	426.09
5+00.00	34.04	7.13	153.79	13.59	615.37	49.10	566.28
6+00.00	30.14	14.12	119.95	40.56	735.32	89.65	645.67
7+00.00	17.20	12.74	88.68	51.21	824.00	140.86	683.14
8+00.00	0.00	0.00	32.19	24.20	856.19	165.06	691.13

ISSUED FOR BID

Freese and Nichols, Inc.
Texas Registered Engineering Firm F-2144

STATE OF TEXAS
SCOTT W. KIRBY
93651
LICENSED
PROFESSIONAL ENGINEER
ORIGINAL SIGNATURE
1-10-2022

FREESE AND NICHOLS
10497 Town and Country Way,
Suite 600
Houston, Texas 77024
Phone - (713) 600-6800
Web - www.freese.com

CITY OF BEAUMONT
COLLIER'S FERRY PUMP STATION

PINE ST CROSS-SECTIONS
STA 5+00 TO STA 7+00

F&N JOB NO. BMT20326
DATE 01/07/2022
DESIGNED RNL
DRAWN RNL
REVISED
CHECKED SWK
FILE NAME CORRIDOR.dwg

NO.	ISSUE	BY	DATE

VERIFY SCALE 0 1
Bar is one inch on original drawing. If not one inch on this sheet, adjust scale.

SHEET C-56
SEQ. 70

ACAD Rel: 24.0s (LMS Tech)
Filename: N:\ENG\CORRIDOR.dwg
Last Saved: 1/10/2022 12:45 PM Saved By: rnl

Plot Date: 1/10/2022 2:38 PM Plot By: rnl Filename: N:\ENG\CORRIDOR.dwg

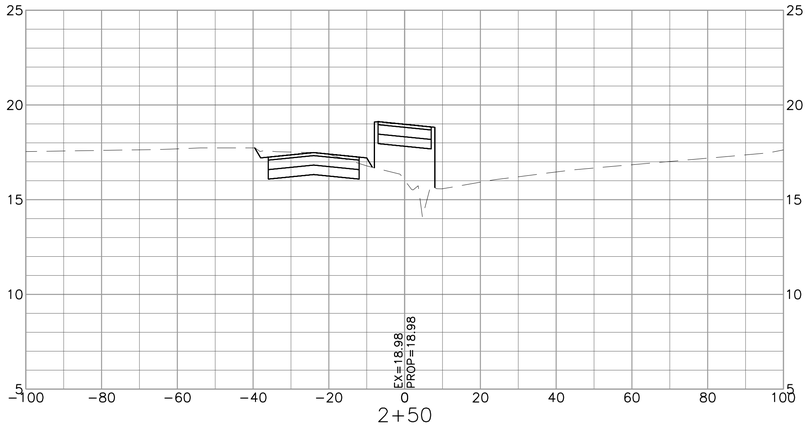

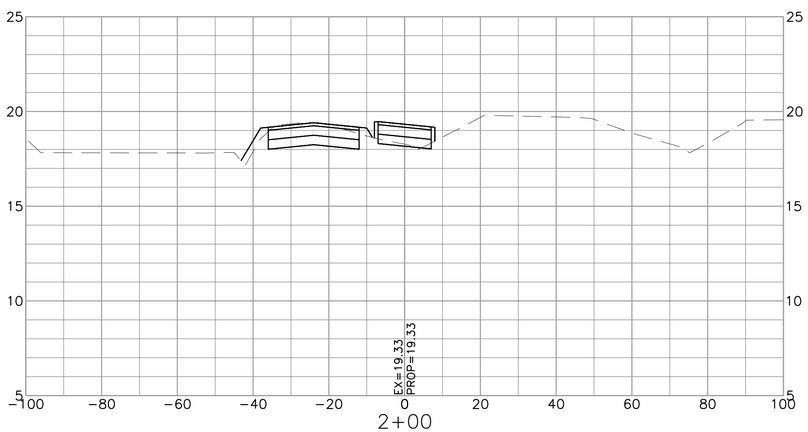

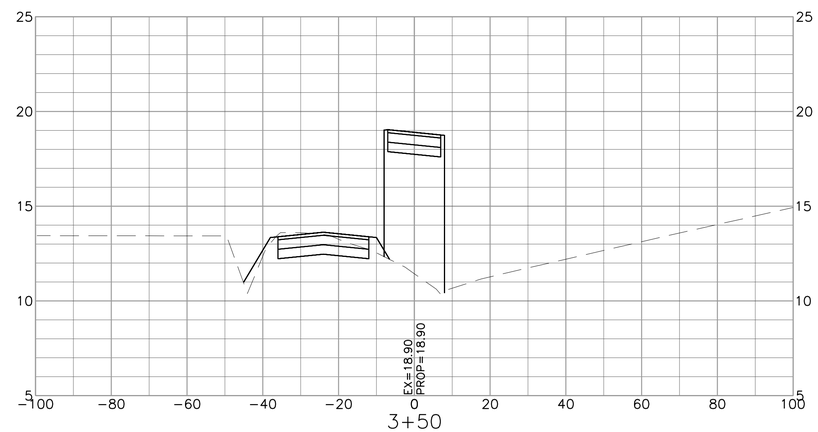

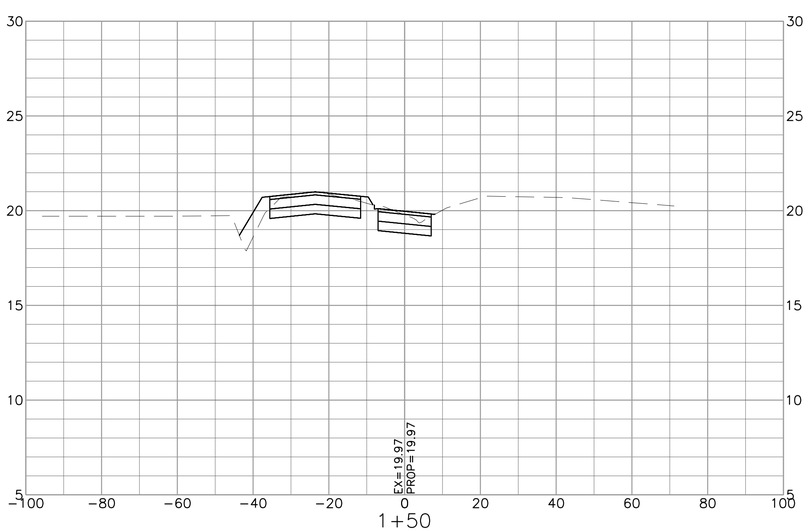

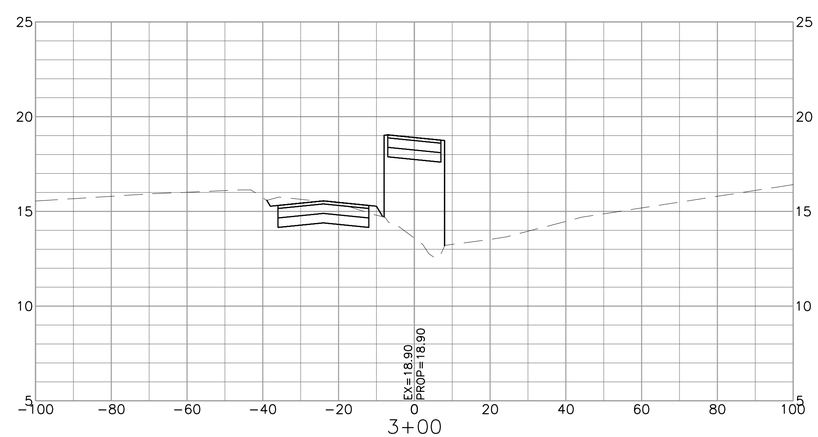

0 10' 20' 40'
HORIZ SCALE IN FEET

0 2' 4' 8'
VERT SCALE IN FEET

ISSUED FOR BID

Freese and Nichols, Inc.
Texas Registered Engineering Firm F-2144

STATE OF TEXAS
SCOTT W. KIRBY
93651
LICENSED
PROFESSIONAL ENGINEER

1-10-2022

FREESE AND NICHOLS
10497 Town and Country Way,
Suite 600
Houston, Texas 77024
Phone - (713) 600-6800
Web - www.freese.com

CITY OF BEAUMONT

COLLIER'S FERRY PUMP STATION

ACCESS RD CROSS-SECTIONS STA 1+50 TO STA 3+50

NO.	ISSUE	BY	DATE

F&N JOB NO. BMT20326
DATE 01/07/2022
DESIGNED RNL
DRAWN RNL
REVISED
CHECKED SWK

FILE NAME CORRIDOR.dwg

VERIFY SCALE 0 1
Bar is one inch on original drawing. If not one inch on this sheet, adjust scale.

SHEET C-57
SEQ. 71

ACAD Rel: 24.0s (LMS Tech)
Filename: N:\ENG\CORRIDOR.dwg
Last Saved: 1/10/2022 12:45 PM Saved By: rnl

Plot Date: 1/10/2022 2:38 PM Plot By: rnl Filename: N:\ENG\CORRIDOR.dwg

0 10' 20' 40'
HORIZ SCALE IN FEET

0 2' 4' 8'
VERT SCALE IN FEET

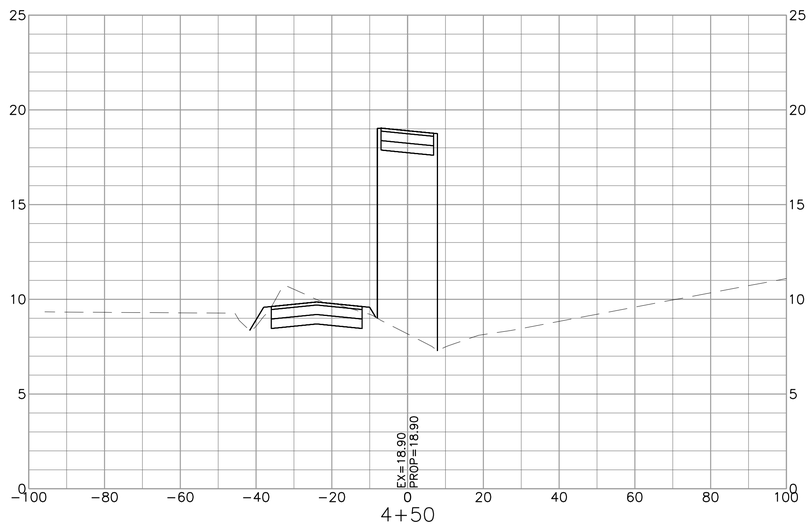

4+50

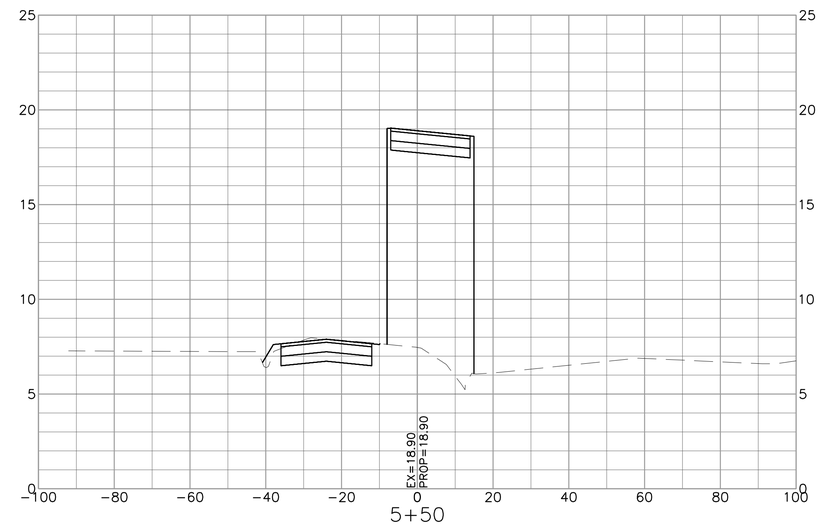

5+50

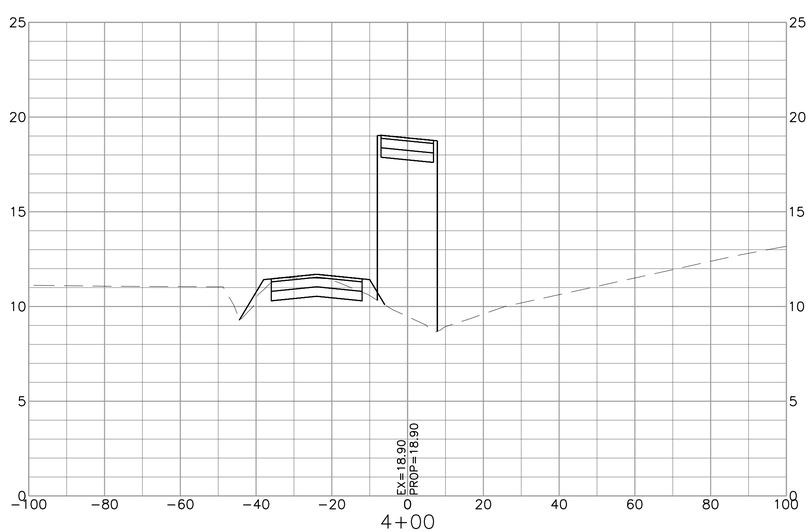

4+00

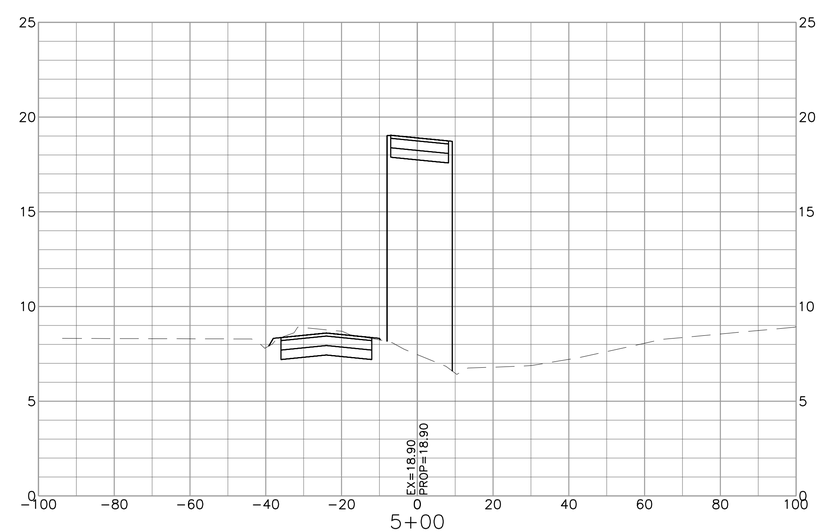

5+00

ISSUED FOR BID

Freese and Nichols, Inc.
Texas Registered Engineering Firm F-2144

STATE OF TEXAS
SCOTT W. KIRBY
93651
LICENSED
PROFESSIONAL ENGINEER
1-10-2022

FREESE AND NICHOLS
10497 Town and Country Way,
Suite 600
Houston, Texas 77024
Phone - (713) 600-6800
Web - www.freese.com

CITY OF BEAUMONT
COLLIER'S FERRY PUMP STATION

ACCESS RD CROSS-SECTIONS
STA 4+00 TO STA 5+50

NO.	ISSUE	BY	DATE

F&N JOB NO. BMT20326
DATE 01/07/2022
DESIGNED RNL
DRAWN RNL
REVISED
CHECKED SWK
FILE NAME CORRIDOR.dwg

VERIFY SCALE 0 1
Bar is one inch on original drawing, if not one inch on this sheet, adjust scale.

SHEET C-58
SEQ. 72

ACAD Rel: 24.0s (LMS Tech)
Filename: N:\ENG\CORRIDOR.dwg
Last Saved: 1/10/2022 12:45 PM Saved By: rnl

Plot Date: 1/10/2022 2:38 PM Plot By: rnl Filename: N:\ENG\CORRIDOR.dwg

0 10' 20' 40'
HORIZ SCALE IN FEET

0 2' 4' 8'
VERT SCALE IN FEET

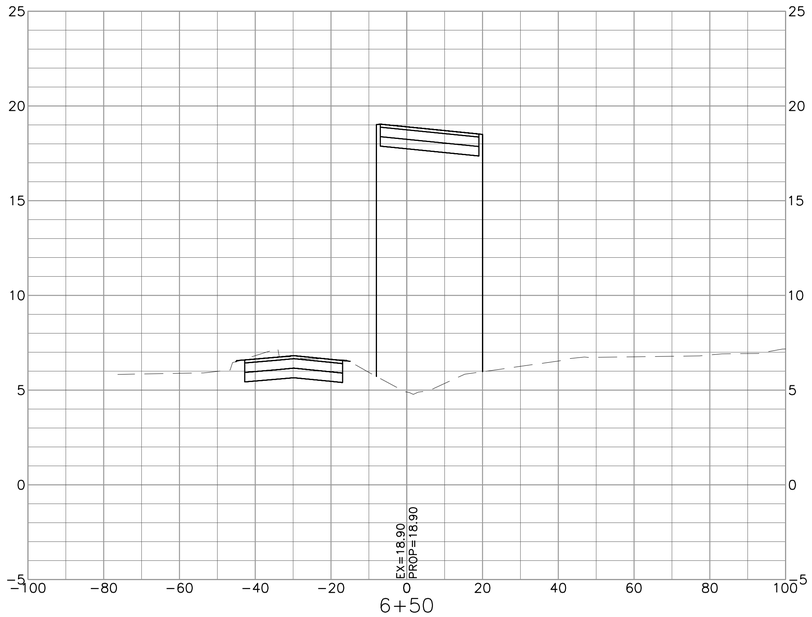

6+50

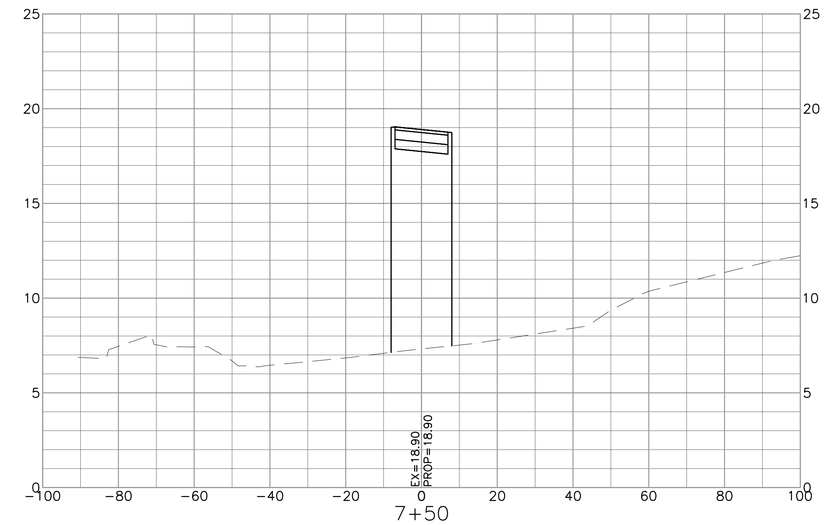

7+50

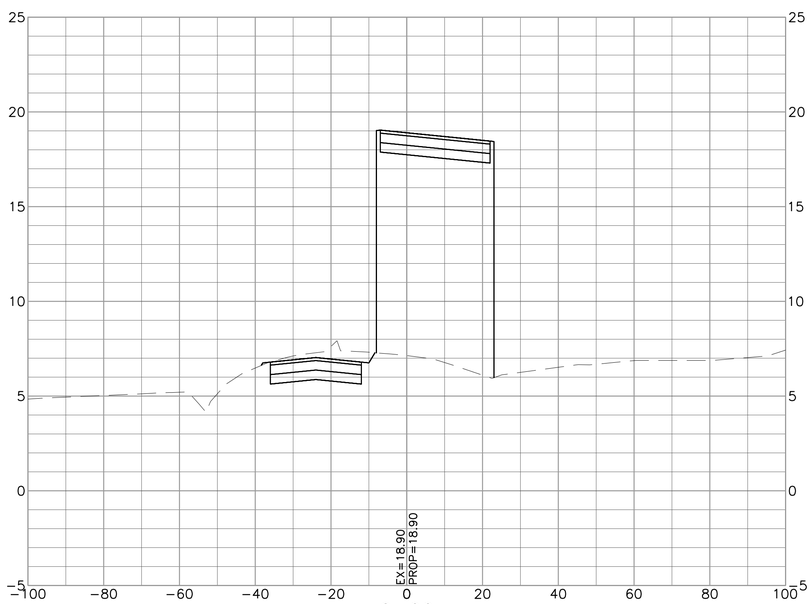

6+00

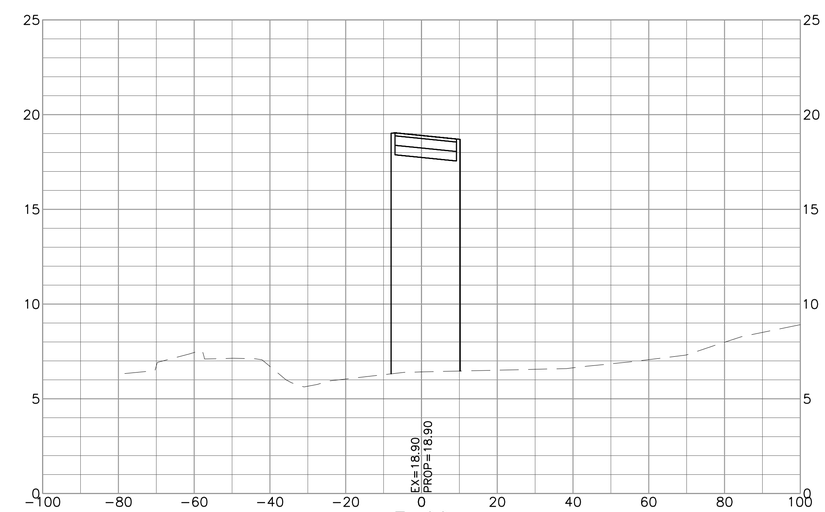

7+00

ISSUED FOR BID

Freese and Nichols, Inc.
Texas Registered Engineering Firm F-2144

STATE OF TEXAS
SCOTT W. KIRBY
93651
LICENSED
PROFESSIONAL ENGINEER
1-10-2022

FREESE AND NICHOLS
10497 Town and Country Way,
Suite 600
Houston, Texas 77024
Phone - (713) 600-6800
Web - www.freese.com

CITY OF BEAUMONT
COLLIER'S FERRY PUMP STATION

ACCESS RD CROSS-SECTIONS
STA 6+00 TO STA 7+50

F&N JOB NO. BMT20326
DATE 01/07/2022
DESIGNED RNL
DRAWN RNL
REVISED
CHECKED SWK
FILE NAME CORRIDOR.dwg

NO.	ISSUE	BY	DATE

VERIFY SCALE 0 1
Bar is one inch on original drawing. If not one inch on this sheet, adjust scale.

SHEET C-59
SEQ. 73

ACAD Rel: 24.0s (LMS Tech)
Filename: N:\ENG\CORRIDOR.dwg
Last Saved: 1/10/2022 12:45 PM Saved By: rnl

Plot Date: 1/10/2022 2:38 PM Plot By: rnl Filename: N:\ENG\CORRIDOR.dwg

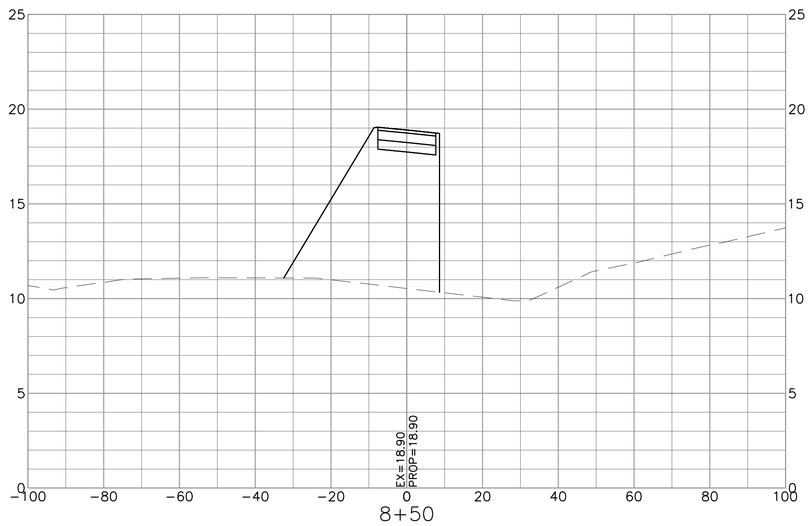

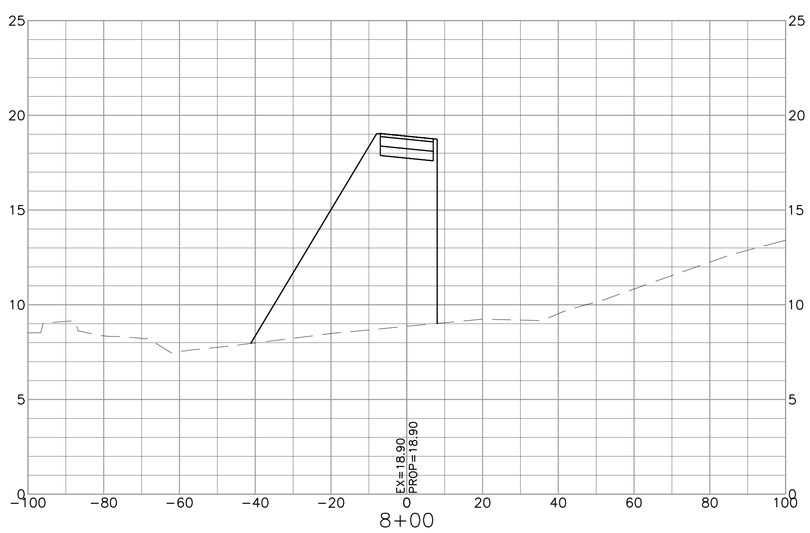

ACCESS RD ALT 2
Total Volume Table

Station	Cut Area	Fill Area	Cut Vol	Fill Vol	Cum Cut Vol	Cum Fill Vol	Net Vol
1+50.00	14.23	0.06	0.00	0.00	0.00	0.00	0.00
2+00.00	1.74	1.89	14.79	1.81	14.79	1.81	12.98
2+50.00	0.00	32.68	1.61	31.99	16.40	33.80	−17.40
3+00.00	0.00	69.23	0.00	94.32	16.40	128.12	−111.73
3+50.00	0.00	103.53	0.00	159.93	16.40	288.05	−271.66
4+00.00	0.00	133.40	0.00	219.36	16.40	507.41	−491.01
4+50.00	0.00	154.24	0.00	266.32	16.40	773.73	−757.33
5+00.00	0.00	179.95	0.00	309.37	16.40	1083.10	−1066.70
5+50.00	0.00	250.54	0.00	398.12	16.40	1481.22	−1464.82
6+00.00	0.00	337.69	0.00	491.00	16.40	1972.21	−1955.82
6+50.00	0.00	346.30	0.00	553.01	16.40	2525.22	−2508.83
7+00.00	0.00	208.06	0.00	511.56	16.40	3036.78	−3020.38
7+50.00	0.00	169.12	0.00	349.69	16.40	3386.47	−3370.07
8+00.00	0.00	314.55	0.00	447.84	16.40	3834.30	−3817.91
8+50.00	0.00	224.42	0.00	517.72	16.40	4352.02	−4335.62

0 10' 20' 40'
HORIZ SCALE IN FEET

0 2' 4' 8'
VERT SCALE IN FEET

ISSUED FOR BID

Freese and Nichols, Inc.
Texas Registered Engineering Firm F-2144

STATE OF TEXAS
SCOTT W. KIRBY
93651
LICENSED
PROFESSIONAL ENGINEER
1-10-2022

FREESE AND NICHOLS
10497 Town and Country Way,
Suite 600
Houston, Texas 77024
Phone - (713) 600-6800
Web - www.freese.com

CITY OF BEAUMONT
COLLIER'S FERRY PUMP STATION

ACCESS RD CROSS-SECTIONS
STA 8+00 TO STA 8+50

F&N JOB NO.	BMT20326
DATE	01/07/2022
DESIGNED	RNL
DRAWN	RNL
REVISED	
CHECKED	SWK
FILE NAME	CORRIDOR.dwg

NO.	ISSUE	BY	DATE

0 VERIFY SCALE 1
Bar is one inch on original drawing. If not one inch on this sheet, adjust scale.

SHEET C-60
SEQ. 74

ACAD Rel: 24.0s (LMS Tech)
Filename: N:\ENG\CORRIDOR.dwg
Last Saved: 1/10/2022 12:45 PM Saved By: rnl

Plot Date: 1/10/2022 2:38 PM Plot By: rnl Filename: N:\ENG\CORRIDOR.dwg

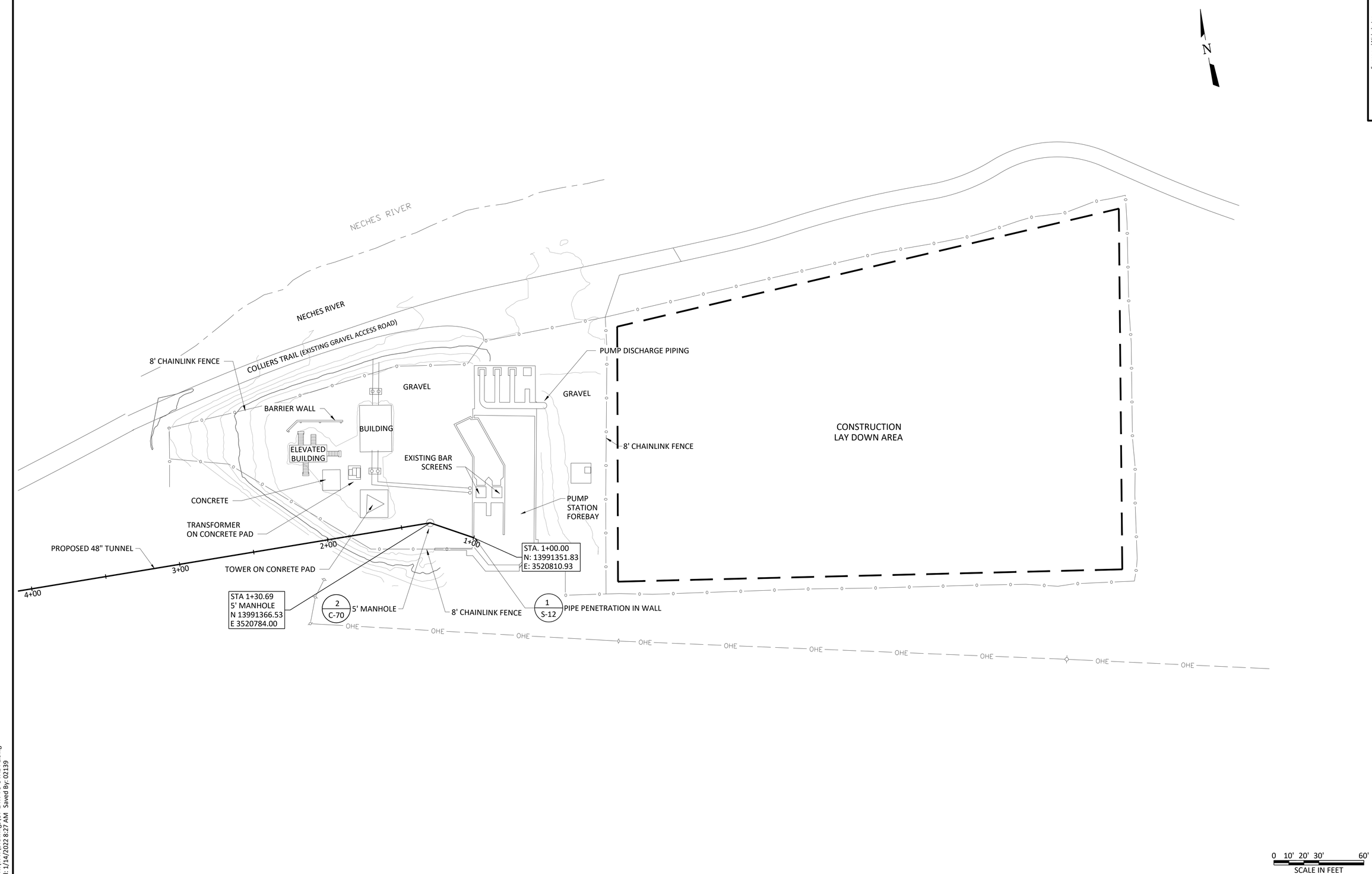

ISSUED FOR BID

Freese and Nichols, Inc.
Texas Registered Engineering Firm F-2144

STATE OF TEXAS
SOMNATH CHILUKURI
118309
LICENSED
PROFESSIONAL ENGINEER
01-19-2022

FREESE AND NICHOLS
10497 Town and Country Way,
Suite 600
Houston, Texas 77024
Phone - (713) 600-6800
Web - www.freese.com

CITY OF BEAUMONT
COLLIER'S FERRY PUMP STATION

CIVIL
LAWSON RWPS
SITE PLAN

F&N JOB NO.	BMT20326
DATE	01/07/2022
DESIGNED	LVR
DRAWN	WFA
REVISED	
CHECKED	ACH
FILE NAME	CV-LAW-PS-OVAL-PL.dwg

NO.	ISSUE	BY	DATE

VERIFY SCALE 0 1
Bar is one inch on original drawing. If not one inch on this sheet, adjust scale.

SHEET C-61
SEQ. 75

ACAD Rel: 24.0s (LMS Tech)
Filename: N:\WW\Drawings\CV-LAW-PS-OVAL-PL.dwg
Last Saved: 1/14/2022 8:27 AM Saved By: 02139

Plot Date: 1/14/2022 2:19 PM Plot By: 02139 Filename: N:\WW\Drawings\CV-LAW-PS-OVAL-PL.dwg

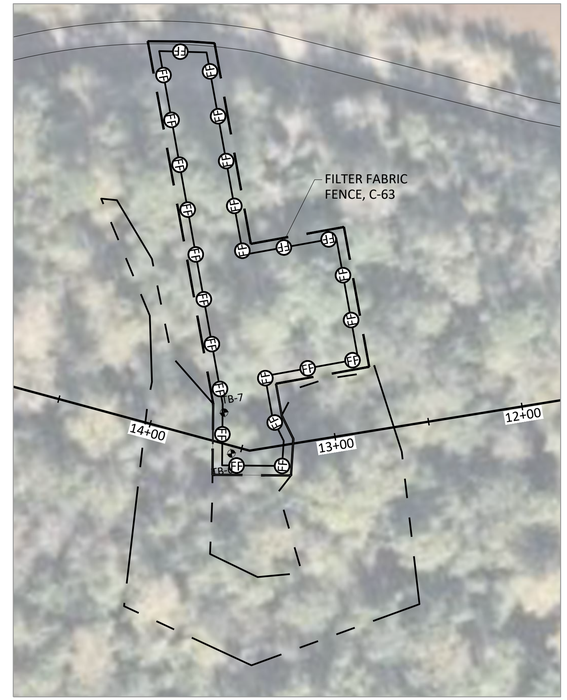

LEDGEND

1. FILTER FABRIC FENCE

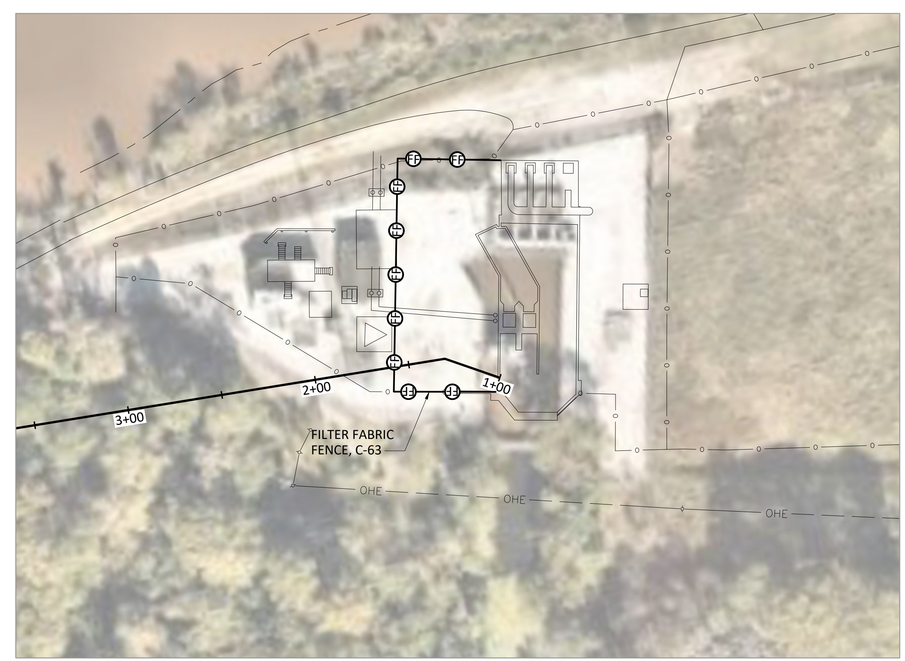

ISSUED FOR BID

Freese and Nichols, Inc.
Texas Registered Engineering Firm F-2144

STATE OF TEXAS
SOMNATH CHILUKURI
118309
LICENSED
PROFESSIONAL ENGINEER
01-19-2022

FREESE AND NICHOLS
10497 Town and Country Way,
Suite 600
Houston, Texas 77024
Phone - (713) 600-6800
Web - www.freese.com

CITY OF BEAUMONT
COLLIER'S FERRY PUMP STATION

CIVIL
STORM WATER
POLLUTION PREVENTION PLAN

NO.	ISSUE	BY	DATE

F&N JOB NO. BMT20326
DATE 01/07/2022
DESIGNED LVR
DRAWN WFA
REVISED
CHECKED ACH
FILE NAME CV-SWPPP.dwg

VERIFY SCALE 0 1
Bar is one inch on original drawing. If not one inch on this sheet, adjust scale.

SHEET C-62
SEQ. 76

ACAD Rel: 24.0s (LMS Tech)
Filename: N:\WW\Drawings\CV-SWPPP.dwg
Last Saved: 1/13/2022 9:27 AM Saved By: 02139

Plot Date: 1/13/2022 2:29 PM Plot By: 02139 Filename: N:\WW\Drawings\CV-SWPPP.dwg

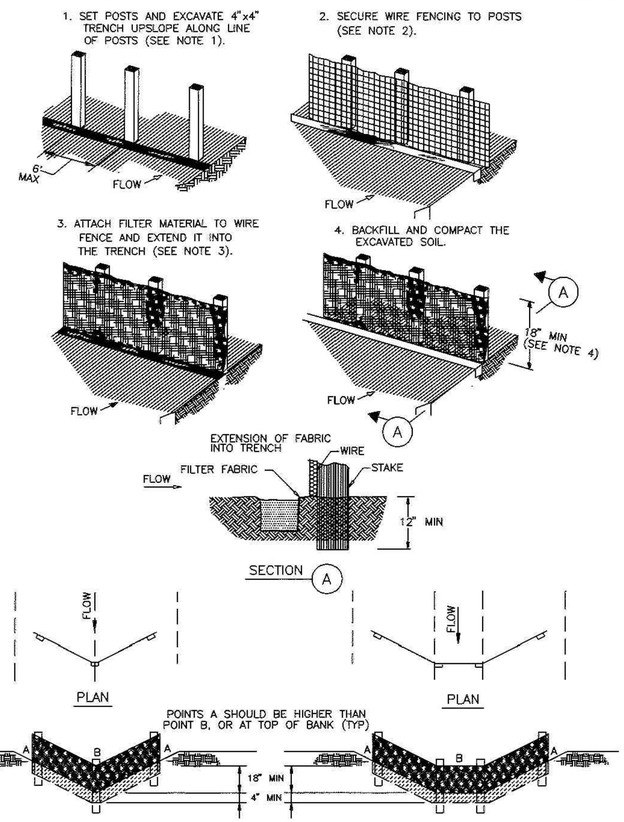

CONSTRUCTION NOTES:

1. SET 2 INCH BY 2 INCH WOODEN STAKES SPACED A MAX OF 6 FEET APART AND EMBEDDED A MIN OF 12 INCHES.
2. WOVEN WIRE FENCE TO BE FASTENED SECURELY TO FENCE POSTS WITH STAPLES.
3. FILTER CLOTH TO BE FASTENED SECURELY TO WOVEN WIRE FENCE, WITH TIES SPACED EVERY 24 INCHES AT TOP AND MIDSECTION.
4. MINIMUM HEIGHT OF FILTER SHOULD BE 18 INCHES AND A MAXIMUM OF 36 INCHES ABOVE NATURAL GROUND.
5. WHEN TWO SECTIONS OF FILTER CLOTH ADJOIN EACH OTHER THEY SHALL BE OVERLAPPED 6 INCHES AT THE POSTS, AND FOLDED.
6. SEE COH STANDARD SPECIFICATION FOR FILTER FABRIC BARRIER.

X — RFB — X
SYMBOL

REINFORCED FILTER FABRIC BARRIER

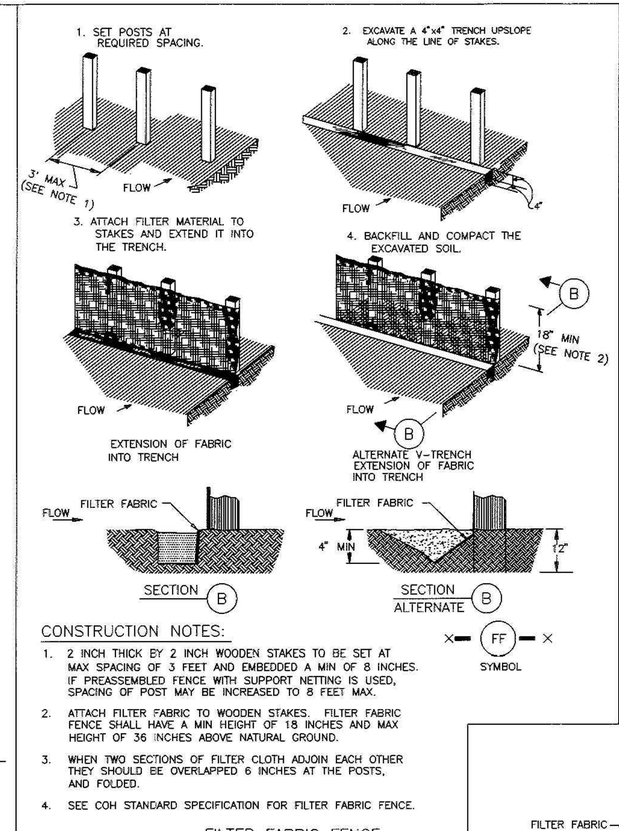

X — FF — X
SYMBOL

CONSTRUCTION NOTES:

1. 2 INCH THICK BY 2 INCH WOODEN STAKES TO BE SET AT MAX SPACING OF 3 FEET AND EMBEDDED A MIN OF 8 INCHES. IF PREASSEMBLED FENCE WITH SUPPORT NETTING IS USED, SPACING OF POST MAY BE INCREASED TO 8 FEET MAX.
2. ATTACH FILTER FABRIC TO WOODEN STAKES. FILTER FABRIC FENCE SHALL HAVE A MIN HEIGHT OF 18 INCHES AND MAX HEIGHT OF 36 INCHES ABOVE NATURAL GROUND.
3. WHEN TWO SECTIONS OF FILTER CLOTH ADJOIN EACH OTHER THEY SHOULD BE OVERLAPPED 6 INCHES AT THE POSTS, AND FOLDED.
4. SEE COH STANDARD SPECIFICATION FOR FILTER FABRIC FENCE.

FILTER FABRIC FENCE

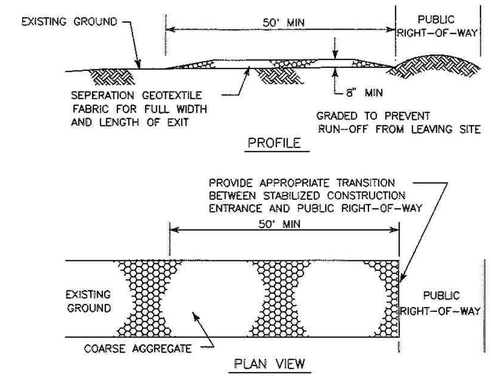

CONSTRUCTION NOTES:

1. LENGTH SHALL BE AS SHOWN ON THE CONSTRUCTION DRAWINGS, BUT NOT LESS THAN 50 FEET.
2. THICKNESS SHALL BE NOT LESS THAN 8 INCHES.
3. WIDTH SHALL BE NOT LESS THAN FULL WIDTH OF ALL POINTS OF INGRESS OR EGRESS.
4. STABILIZATION FOR OTHER AREAS SHALL HAVE THE SAME AGGREGATE THICKNESS AND WIDTH REQUIREMENTS AS THE STABILIZED CONSTRUCTION EXIT, UNLESS OTHERWISE SHOWN ON THE CONSTRUCTION DRAWINGS.
5. STABILIZED AREA MAY BE WIDENED OR LENGTHENED TO ACCOMODATE A TRUCK WASHING AREA. AN OUTLET SEDIMENT TRAP MUST BE PROVIDED FOR THE TRUCK WASHING AREA.
6. SEE COH STANDARD SPECIFICATION FOR STABILIZED CONSTRUCTION EXIT.
7. STABILIZED CONSTRUCTION EXIT SHALL BE MAINTAINED FREE OF SEDIMENT FOR THE DURATION OF THE PROJECT.

SC
SYMBOL

STABILIZED CONSTRUCTION EXIT

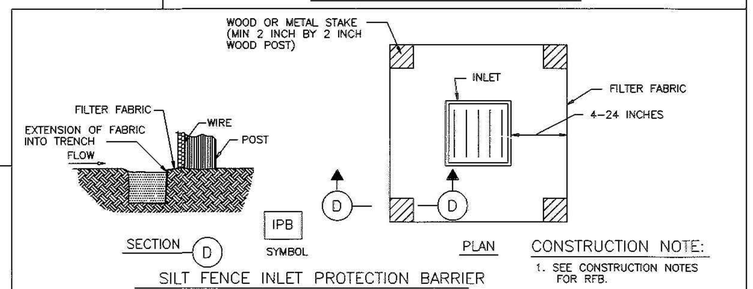

SILT FENCE INLET PROTECTION BARRIER

CONSTRUCTION NOTE:

1. SEE CONSTRUCTION NOTES FOR RFB.

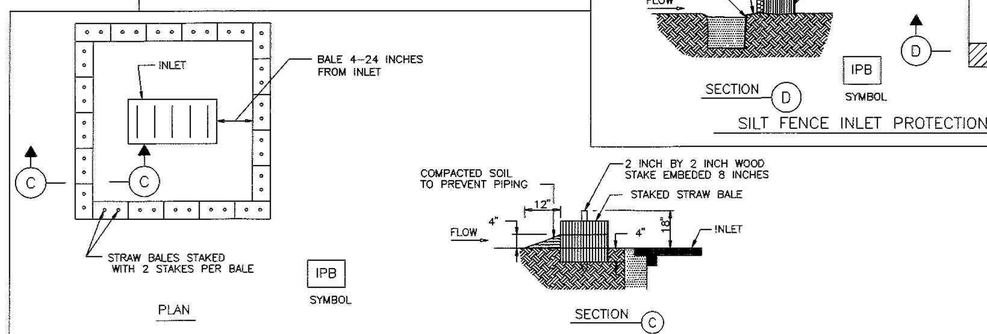

STRAW BALE DROP INLET PROTECTION BARRIER

COH

ISSUED FOR BID

Freese and Nichols, Inc.
Texas Registered Engineering Firm F-2144

STATE OF TEXAS
KENNETH CHALMERS SCHNEIDER
118309
LICENSED
PROFESSIONAL ENGINEER
01-19-2022

FREESE AND NICHOLS
10497 Town and Country Way,
Suite 600
Houston, Texas 77024
Phone - (713) 600-6800
Web - www.freese.com

CITY OF BEAUMONT
COLLIER'S FERRY PUMP STATION

CIVIL
STORMWATER POLLUTION PREVENTION PLAN DETAILS

NO.	ISSUE	BY	DATE

F&N JOB NO. BMT20326
DATE 01/07/2022
DESIGNED LYR
DRAWN WFA
REVISED
CHECKED ACH
FILE NAME CV-HOU-PL-EQPT-01.dwg

VERIFY SCALE Bar is one inch on original drawing. If not one inch on this sheet, adjust scale.
0 1

SHEET C-63
SEQ. 77

ACAD Rel: 24.0s (LMS Tech)
Filename: N:\WW\Drawings\CV-HOU-PL-EQPT-01.dwg
Last Saved: 8/2/2021 4:29 PM Saved By: 02139

Plot Date: 1/13/2022 2:30 PM Plot By: 02139 Filename: N:\WW\Drawings\CV-HOU-PL-EQPT-01.dwg

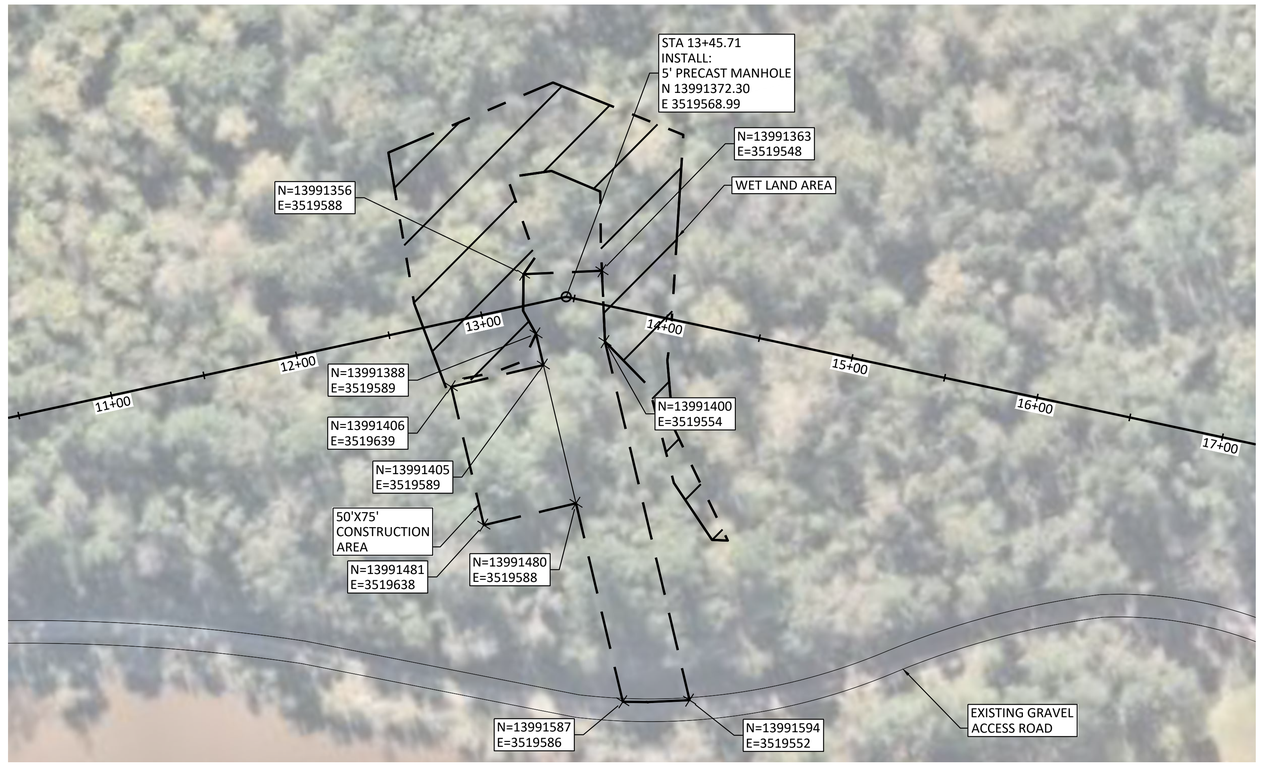

N

0 40' 80'
SCALE IN FEET
HORIZONTAL

NOTES:

1. CONTRACTOR SHALL NOT ENTER OR DISTURB WETLAND AREAS DELINEATED ON THE DRAWINGS.
2. CONTRACTOR SHALL STAKE THE WETLAND AREA AND PROVIDE A BARRIER.
3. CONTRACTOR IS RESPONSIBLE FOR CREATING AND MAINTAINING ACCESS FOR EQUIPMENT DURING CONSTRUCTION AS NECESSARY.

LEGEND

WETLAND AREA

CLEARING AND GRUBBING AREA

ISSUED FOR BID

Freese and Nichols, Inc.
Texas Registered Engineering Firm F-2144

01-19-2022

STATE OF TEXAS
SOMNATH CHILUKURI
118309
LICENSED
PROFESSIONAL ENGINEER

FREESE AND NICHOLS
10497 Town and Country Way,
Suite 600
Houston, Texas 77024
Phone - (713) 600-6800
Web - www.freese.com

CITY OF BEAUMONT
COLLIER'S FERRY PUMP STATION

CIVIL
INTERMEDIATE SHAFT
ACCESS AND SITE PLAN

NO.	ISSUE	BY	DATE

F&N JOB NO. BMT20326
DATE 01/07/2022
DESIGNED LVR
DRAWN WFA
REVISED
CHECKED ACH
FILE NAME CV-TUN-INTME-ACC-RD.dwg

VERIFY SCALE 0 1
Bar is one inch on original drawing. If not one inch on this sheet, adjust scale.

SHEET C-64
SEQ. 78

ACAD Rel: 24.0s (LMS Tech)
Filename: N:\WW\Drawings\CV-TUN-INTME-ACC-RD.dwg
Last Saved: 8/2/2021 4:36 PM Saved By: 02139

Plot Date: 1/13/2022 2:30 PM Plot By: 02139 Filename: N:\WW\Drawings\CV-TUN-INTME-ACC-RD.dwg

NOTES:

1. AERIAL IMAGERY SHOWN WAS OBTAINED FROM NEARMAP AND DATED OCTOBER 10 2020.
2. SURVEY DATA AT SHAFT SITES WAS OBTAINED FROM ANTHONY M LEGER OF SOUTEX SURVEYORS & ENGINEERS, TEXAS PROFESSIONAL LAND SURVEYOR NO. 5481. SURVEY INFORMATION WAS COLLECTED ON JANUARY 25, 2021.
3. PROFILE FOLLOWS THE CENTERLINE OF THE MICROTUNNEL AND PIPELINE ALIGNMENT.
4. HORIZONTAL STATIONING ALONG THE MICROTUNNEL AND PIPELINE ALIGNMENT IS FOR LEVEL LINE MEASUREMENT. CONTRACTOR SHALL PROVIDE THE ACTUAL PIPELINE LENGTH TO BE DETERMINED BY THE SLOPE ON WHICH THE MICROTUNNEL IS TO BE CONSTRUCTED. THE CONTRACTOR SHALL INSTALL ALL PIPELINES AT A UNIFORM GRADE BETWEEN ELEVATIONS DEPICTED ON THE DRAWINGS.
5. THIS AREA IS SUBJECT TO FLOODING. FLOOD PROTECTION OF THE SITE AND ALL UNDERGROUND EXCAVATIONS SHALL BE THE RESPONSIBILITY OF THE CONTRACTOR. AT A MINIMUM UNDERGROUND EXCAVATIONS SHALL BE PROTECTED FROM FLOODING THROUGHOUT CONSTRUCTION TO AT LEAST ELEVATION 15.2 (TWO FEET ABOVE THE 100 YEAR FLOOD ELEVATION).
6. CONTRACTOR SHALL NOT ENTER OR DISTURB WETLAND AREAS DELINEATED ON THE DRAWINGS.
7. CONTRACTOR SHALL INSTALL SURFACE MONITORING POINTS (SMPS) AND STRUCTURAL SURFACE MONITORING POINTS (SSMPS) AS SHOWN AND IN ACCORDANCE WITH SECTION 33 13 54 GEOTECHNICAL INSTRUMENTATION AND MONITORING.

N

0 100' 200'
SCALE IN FEET
HORIZONTAL

0 10' 20'
SCALE IN FEET
VERTICAL

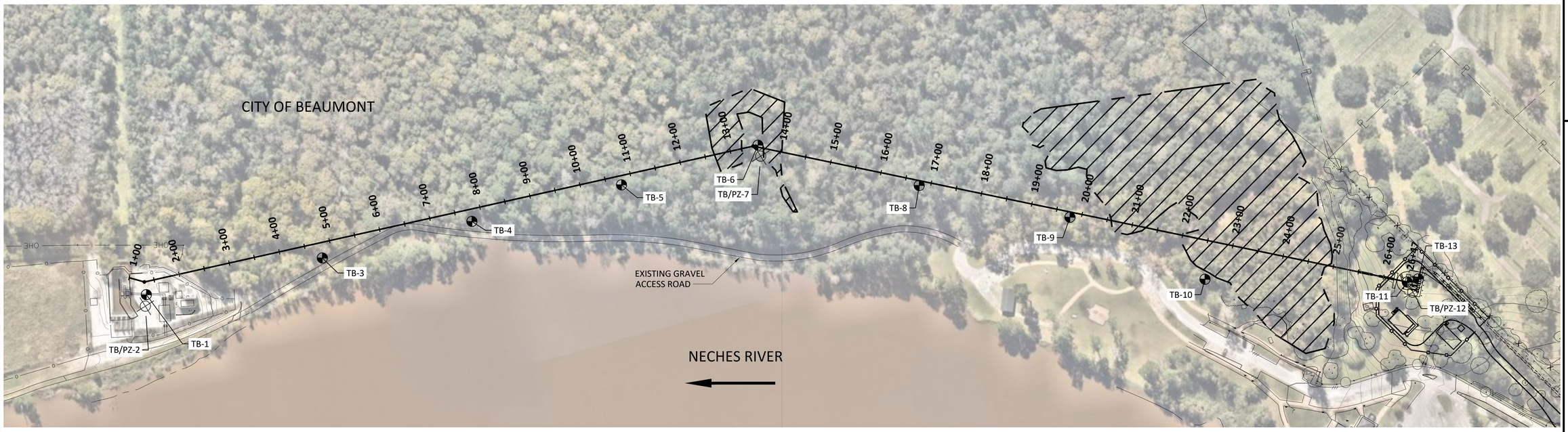

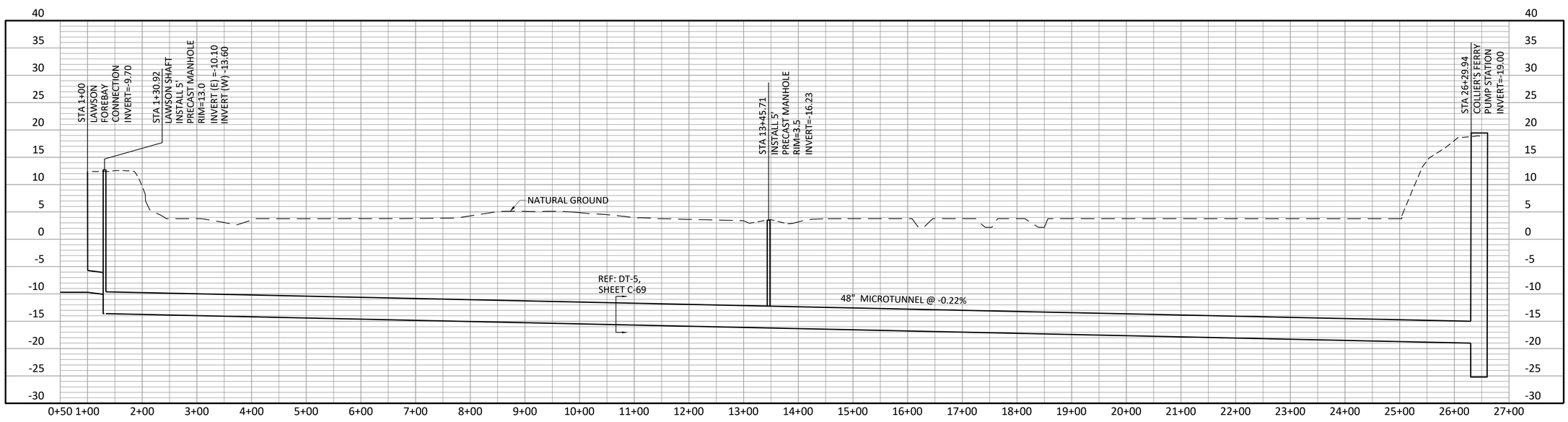

ISSUED FOR BID

Freese and Nichols, Inc.
Texas Registered Engineering Firm F-2144

STATE OF TEXAS
BRIAN CHRISTOPHER OLTMAN
LICENSED
PROFESSIONAL ENGINEER
140672
01/07/2022

FREESE AND NICHOLS
10497 Town and Country Way,
Suite 600
Houston, Texas 77024
Phone - (713) 600-6800
Web - www.freese.com

CITY OF BEAUMONT
COLLIER'S FERRY PUMP STATION

CIVIL
TUNNEL
OVERALL PLAN AND PROFILE

F&N JOB NO.	BMT20326
DATE	01/07/2022
DESIGNED	L.VR
DRAWN	WF.A
REVISED	-
CHECKED	A.CH
FILE NAME	CV-TUN-OVAL-PP.dwg

NO.	ISSUE	BY	DATE

VERIFY SCALE 0 1
Bar is one inch on original drawing. If not one inch on this sheet, adjust scale.

SHEET C-65
SEQ. 79

ACAD Rel: 24.0s (LMS Tech)
Filename: N:\WW\Drawings\CV-TUN-OVAL-PP.dwg
Last Saved: 1/13/2022 11:30 AM Saved By: 02139

Plot Date: 1/13/2022 2:30 PM Plot By: 02139 Filename: N:\WW\Drawings\CV-TUN-OVAL-PP.dwg

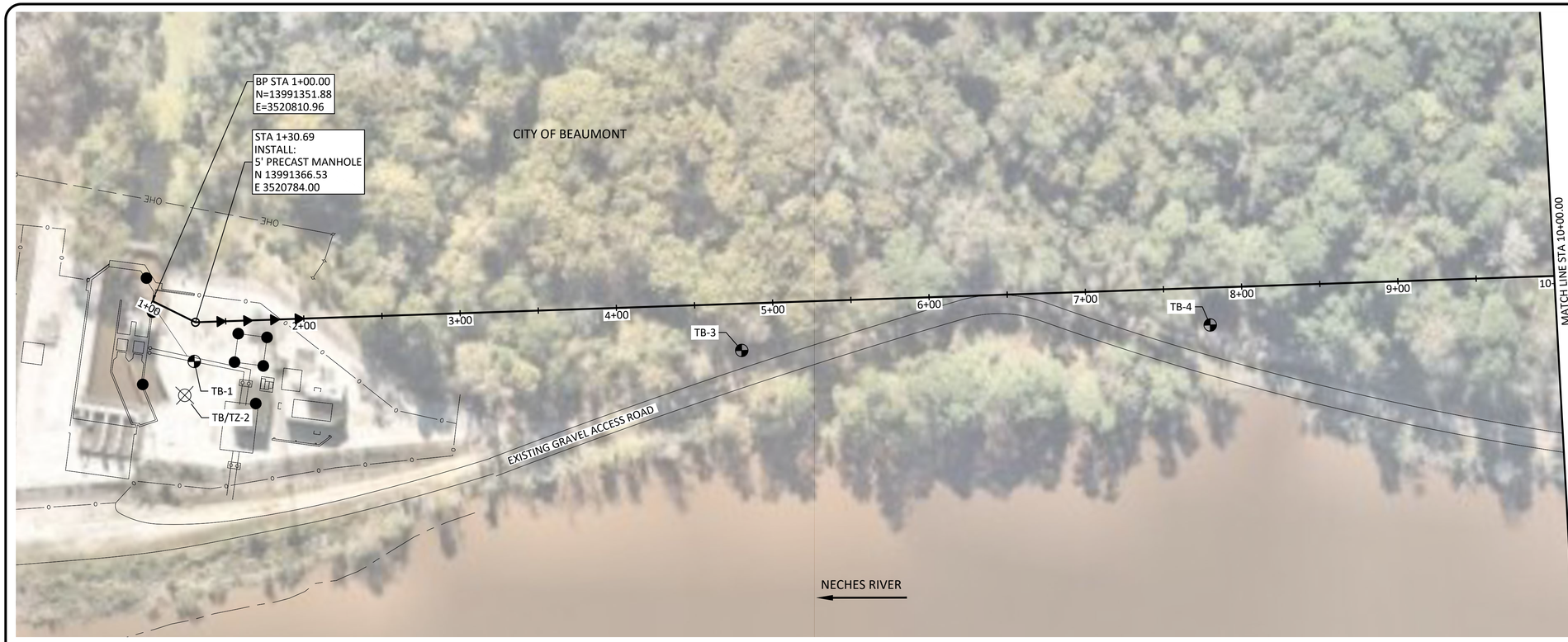

N

0 40' 80'
SCALE IN FEET
HORIZONTAL

0 5' 10'
SCALE IN FEET
VERTICAL

NOTES:

1. SHAFT INITIAL SUPPORT SYSTEM SHALL BE DESIGNED BY THE CONTRACTOR. THE SHAFT INITIAL SUPPORT SYSTEM SHALL PROVIDE A STABLE EXCAVATION AND STABLE SLOPE SURROUNDING THE EXCAVATION. CONTRACTOR SHALL BE RESPONSIBLE FOR SELECTING AND PROVIDING AN ADEQUATE INITIAL SUPPORT SYSTEM TO ENSURE SAFETY. THE SHAFT INITIAL SUPPORT SYSTEM SHALL BE IN ACCORDANCE WITH SECTION 33 73 15 SHAFT EXCAVATION.
2. ACCESS TO PUMPS, ELECTRICAL BUILDING SCREENS AND CONTROL PANELS AT LAWSON PS SHALL BE MAINTAINED DURING CONSTRUCTION. COORDINATE WITH THE OWNER.
3. MICROTUNNELING SHALL BE PERFORMED IN ACCORDANCE WITH SECTION 33 30 00 MICROTUNNELING.
4. JACKING PIPE ASSOCIATED WITH MICROTUNNEL SHALL BE DESIGNED BY THE CONTRACTOR IN ACCORDANCE WITH SECTION 33 30 00 MICROTUNNELING AND SHALL BE IN ACCORDANCE WITH SECTION 33 05 39 REINFORCED JACKING PIPE OR 33 31 13.13 FIBERGLASS PIPE.
5. OPEN CUT PIPE SHALL BE CONSTRUCTED WITH SAME PIPE MATERIAL AS JACKING PIPE.
6. CONTRACTOR SHALL INSTALL, PROTECT, MONITOR, MAINTAIN, AND REMOVE GEOTECHNICAL INSTRUMENTATION SHOWN IN ACCORDANCE WITH SECTION 33 13 54 GEOTECHNICAL INSTRUMENTATION AND MONITORING.

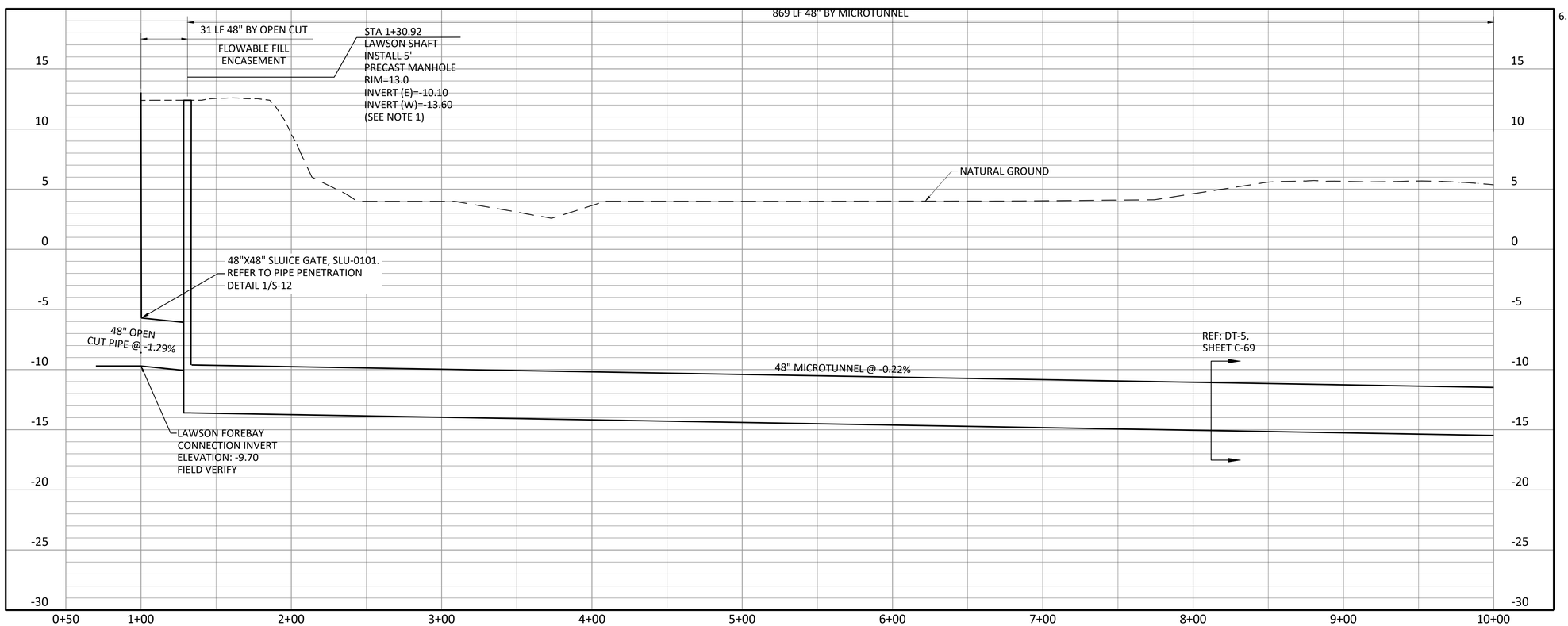

LEGEND

1. BORINGS
2. PIEZOMETER
3. WETLAND AREA
4. SMP
5. UMP
6. SSP

ISSUED FOR BID

Freese and Nichols, Inc.
Texas Registered Engineering Firm F-2144

STATE OF TEXAS
BRIAN CHRISTOPHER OLTMAN
LICENSED
140672
PROFESSIONAL ENGINEER
01/07/2022

FREESE AND NICHOLS
10497 Town and Country Way,
Suite 600
Houston, Texas 77024
Phone - (713) 600-6800
Web - www.freese.com

CITY OF BEAUMONT
COLLIER'S FERRY PUMP STATION

CIVIL
TUNNEL
PLAN & PROFILE - SHEET 1 OF 3

F&N JOB NO.	BMT20326
DATE	01/07/2022
DESIGNED	LVR
DRAWN	WFA
REVISED	-
CHECKED	ACH
FILE NAME	CV-TUN-PP.dwg

NO.	ISSUE	BY	DATE

VERIFY SCALE 0 1
Bar is one inch on original drawing, if not one inch on this sheet, adjust scale.

SHEET
C-66
SEQ.
80

ACAD Rel: 24.0s (LMS Tech)
Filename: N:\WW\Drawings\CV-TUN-PP.dwg
Last Saved: 1/13/2022 1:55 PM Saved By: 02139

Plot Date: 1/13/2022 2:31 PM Plot By: 02139 Filename: N:\WW\Drawings\CV-TUN-PP.dwg

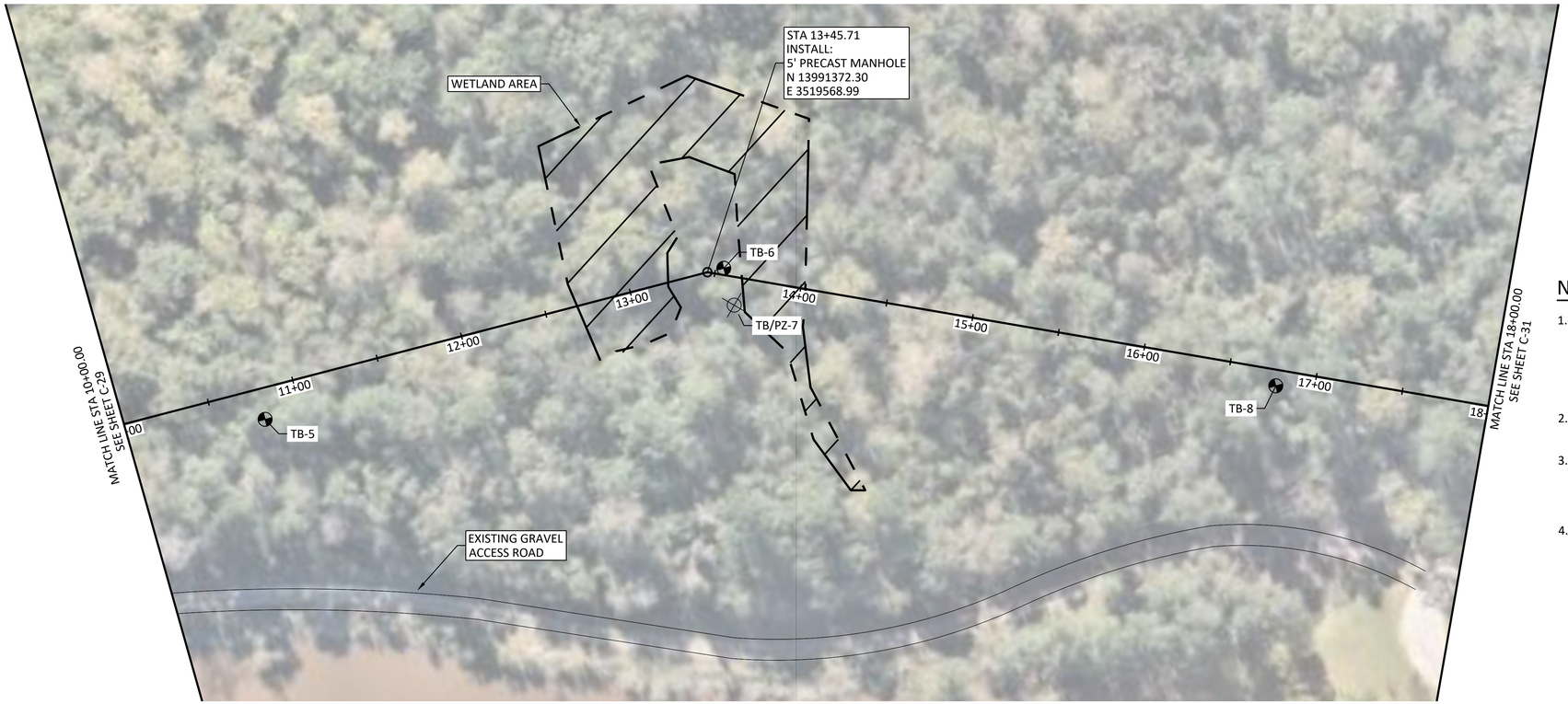

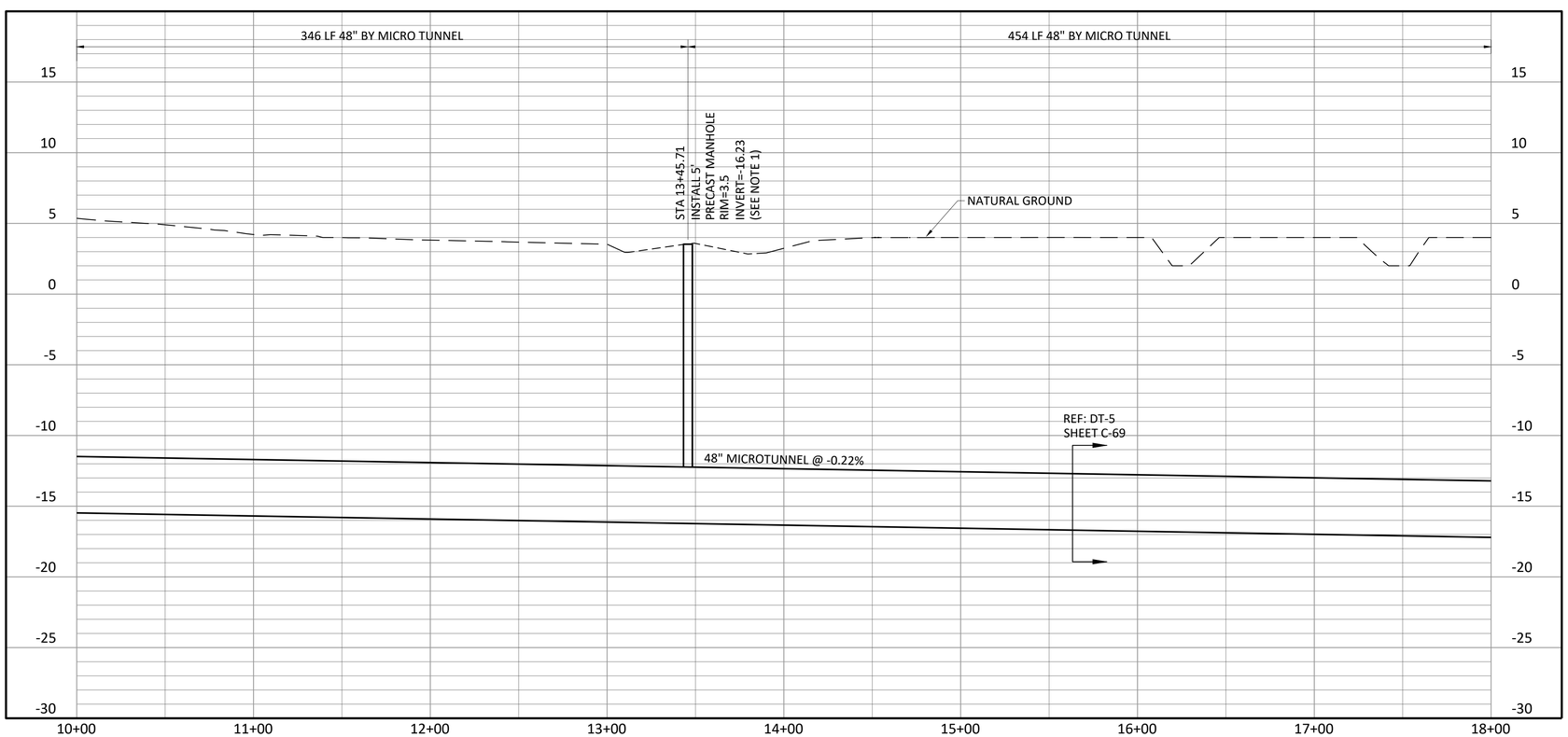

N

0 40' 80'
SCALE IN FEET
HORIZONTAL

0 5' 10'
SCALE IN FEET
VERTICAL

NOTES:

1. SHAFT INITIAL SUPPORT SYSTEM SHALL BE DESIGNED BY THE CONTRACTOR. THE SHAFT INITIAL SUPPORT SYSTEM SHALL PROVIDE A STABLE EXCAVATION AND STABLE SLOPE SURROUNDING THE EXCAVATION. CONTRACTOR SHALL BE RESPONSIBLE FOR SELECTING AND PROVIDING AN ADEQUATE INITIAL SUPPORT SYSTEM TO ENSURE SAFETY. THE SHAFT INITIAL SUPPORT SYSTEM SHALL BE IN ACCORDANCE WITH SECTION 33 73 15 SHAFT EXCAVATION.
2. MICROTUNNELING SHALL BE PERFORMED IN ACCORDANCE WITH SECTION 33 30 00 MICROTUNNELING.
3. 3. JACKING PIPE ASSOCIATED WITH MICROTUNNEL SHALL BE DESIGNED BY THE CONTRACTOR IN ACCORDANCE WITH SECTION 33 30 00 MICROTUNNELING AND SHALL BE IN ACCORDANCE WITH SECTION 33 05 39 REINFORCED JACKING PIPE OR 33 31 13.13 FIBERGLASS PIPE.
4. 4. CONTRACTOR SHALL INSTALL, PROTECT, MONITOR, MAINTAIN, AND REMOVE GEOTECHNICAL INSTRUMENTATION SHOWN IN ACCORDANCE WITH SECTION 33 13 54 GEOTECHNICAL INSTRUMENTATION AND MONITORING.

LEGEND

1. BORINGS
2. PIEZOMETER
3. WETLAND AREA
4. SMP
5. UMP
6. SSP

ISSUED FOR BID

Freese and Nichols, Inc.
Texas Registered Engineering Firm F-2144

STATE OF TEXAS
BRIAN CHRISTOPHER OLTMAN
140672
LICENSED
PROFESSIONAL ENGINEER
01/07/2022

FREESE AND NICHOLS
10497 Town and Country Way,
Suite 600
Houston, Texas 77024
Phone - (713) 600-6800
Web - www.freese.com

CITY OF BEAUMONT
COLLIER'S FERRY PUMP STATION

CIVIL
TUNNEL
PLAN & PROFILE - SHEET 2 OF 3

F&N JOB NO.	BMT20326
DATE	01/07/2022
DESIGNED	LVR
DRAWN	WFA
REVISED	-
CHECKED	ACH
FILE NAME	CV-TUN-PP.dwg

NO.	ISSUE	BY	DATE

VERIFY SCALE 0 1
Bar is one inch on original drawing. If not one inch on this sheet, adjust scale.

SHEET C-67
SEQ. 81

ACAD Rel: 24.0s (LMS Tech)
Filename: N:\WW\Drawings\CV-TUN-PP.dwg
Last Saved: 1/13/2022 1:55 PM Saved By: 02139

Plot Date: 1/13/2022 2:31 PM Plot By: 02139 Filename: N:\WW\Drawings\CV-TUN-PP.dwg

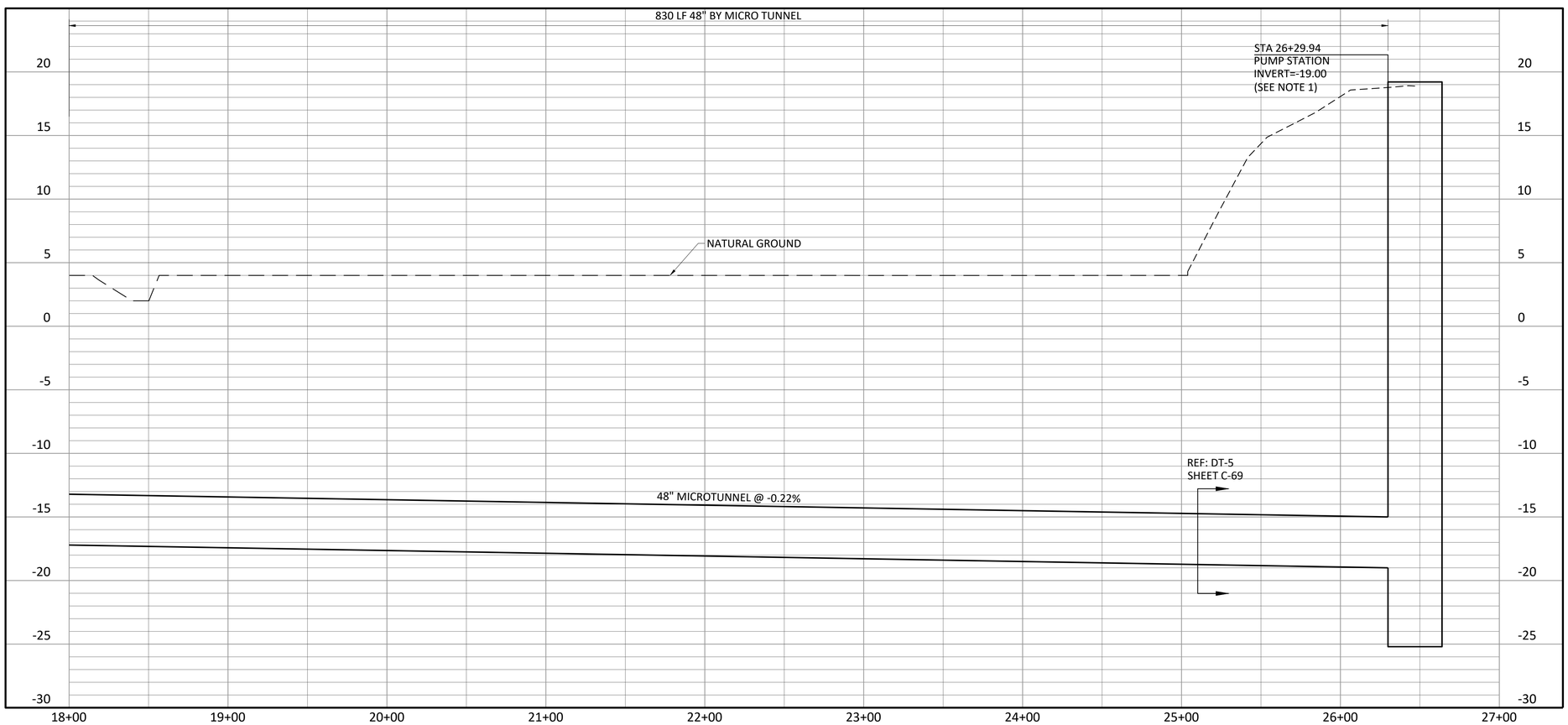

N

0 40' 80'
SCALE IN FEET
HORIZONTAL

0 5' 10'
SCALE IN FEET
VERTICAL

LEGEND

1. BORINGS
2. PIEZOMETER
3. WETLAND AREA
4. SMP
5. UMP
6. SSP

NOTES:

1. SHAFT INITIAL SUPPORT SYSTEM SHALL BE DESIGNED BY THE CONTRACTOR. THE SHAFT INITIAL SUPPORT SYSTEM SHALL PROVIDE A STABLE EXCAVATION AND STABLE SLOPE SURROUNDING THE EXCAVATION. CONTRACTOR SHALL BE RESPONSIBLE FOR SELECTING AND PROVIDING AN ADEQUATE INITIAL SUPPORT SYSTEM TO ENSURE SAFETY. THE SHAFT INITIAL SUPPORT SYSTEM SHALL BE IN ACCORDANCE WITH SECTION 33 73 15 SHAFT EXCAVATION.
2. MICROTUNNELING SHALL BE PERFORMED IN ACCORDANCE WITH SECTION 33 30 00 MICROTUNNELING.
3. JACKING PIPE ASSOCIATED WITH MICROTUNNEL SHALL BE DESIGNED BY THE CONTRACTOR IN ACCORDANCE WITH SECTION 33 30 00 MICROTUNNELING AND SHALL BE IN ACCORDANCE WITH SECTION 33 05 39 REINFORCED JACKING PIPE OR 33 31 13.13 FIBERGLASS PIPE.
4. CONTRACTOR SHALL INSTALL, PROTECT, MONITOR, MAINTAIN, AND REMOVE GEOTECHNICAL INSTRUMENTATION SHOWN IN ACCORDANCE WITH SECTION 33 13 54 GEOTECHNICAL INSTRUMENTATION AND MONITORING.

ISSUED FOR BID

Freese and Nichols, Inc.
Texas Registered Engineering Firm F-2144

STATE OF TEXAS
BRIAN CHRISTOPHER OLTMAN
140672
LICENSED
PROFESSIONAL ENGINEER
01/07/2022

FREESE AND NICHOLS
10497 Town and Country Way,
Suite 600
Houston, Texas 77024
Phone - (713) 600-6800
Web - www.freese.com

CITY OF BEAUMONT
COLLIER'S FERRY PUMP STATION

CIVIL
TUNNEL
PLAN & PROFILE - SHEET 3 OF 3

F&N JOB NO.	BMT20326
DATE	01/07/2022
DESIGNED	LVR
DRAWN	WFA
REVISED	-
CHECKED	ACH
FILE NAME	CV-TUN-PP.dwg

NO.	ISSUE	BY	DATE

VERIFY SCALE 0 1
Bar is one inch on original drawing. If not one inch on this sheet, adjust scale.

SHEET
C-68
SEQ.
82

ACAD Rel: 24.0s (LMS Tech)
Filename: N:\WW\Drawings\CV-TUN-PP.dwg
Last Saved: 1/13/2022 1:55 PM Saved By: 02139

Plot Date: 1/13/2022 2:31 PM Plot By: 02139 Filename: N:\WW\Drawings\CV-TUN-PP.dwg

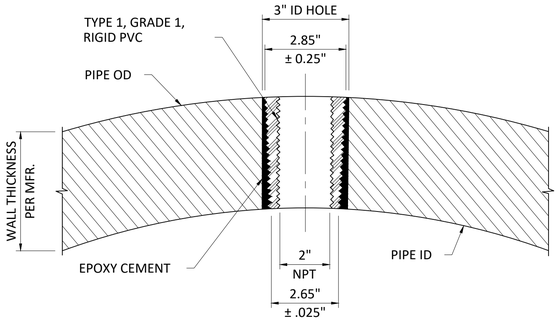

NOTES:

1. GROUT PORT SHALL BE INSTALLED BY PIPE MANUFACTURER.
2. GROUT PORT SHALL BE PLUGGED IN ACCORDANCE WITH SECTION 35 23 24 CONTACT GROUTING AFTER CONTACT GROUTING HAS BEEN COMPLETED.

1 PIPE GROUT PORT DETAIL

NOT TO SCALE

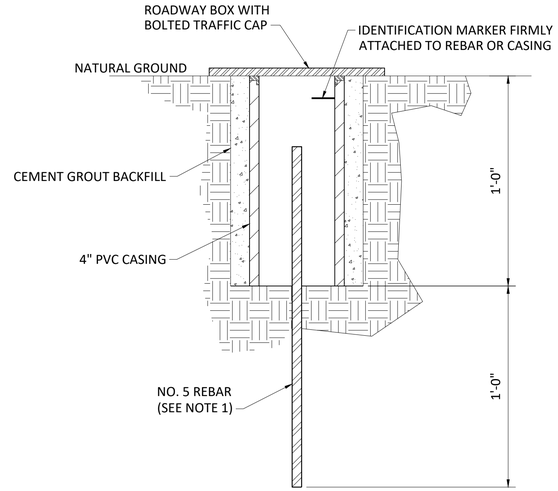

NOTES:

1. DRIVE REBAR OR DRILL AND GROUT EMBEDMENT TO ACHIEVE FIRM ANCHORAGE.
2. IF ONLY VERTICAL MONITORING REQUIRED, POINT OR BEVEL TOP OF REBAR. IF HORIZONTAL MONITORING ALSO REQUIRED, PROVIDE CENTER MARK ON TOP OF REBAR TO ACCEPT SURVEY ROD.

2 SURFACE MONITORING POINTS IN SOIL (SMP)

NOT TO SCALE

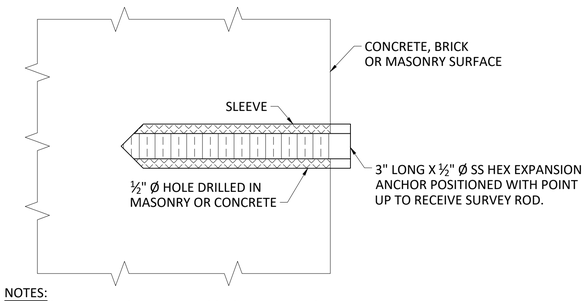

NOTES:

1. FOR SURFACE OTHER THAN CONCRETE, BRICK OR MASONRY, EPOXY TO SURFACE.
2. CONTRACTOR MAY USE REFLECTIVE SURVEY TARGETS IN LIEU OF EXPANSION ANCHORS.

3 STRUCTURAL SURFACE MONITORING POINT (SSMP)

NOT TO SCALE

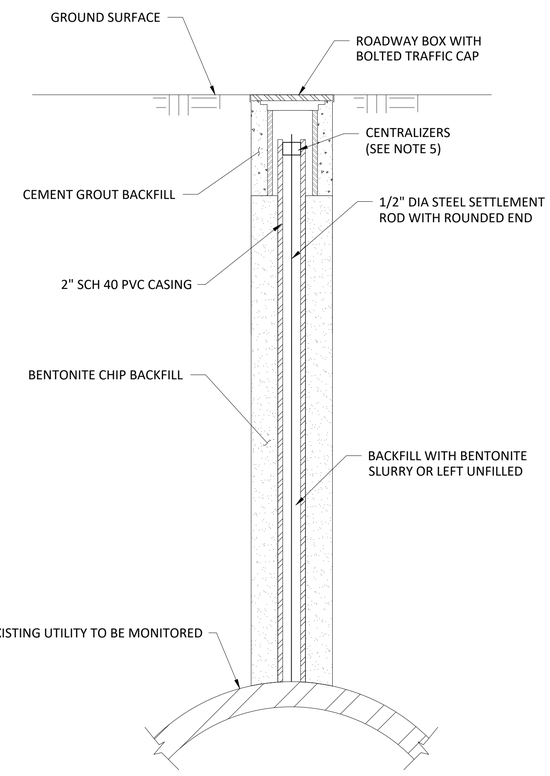

NOTES:

1. UTILITY MONITORING POINT INSTALLATION SHALL BE COMPLETED BY MEANS OF VACUUM EXCAVATION OR OTHER "SOFT-DIG" METHOD. CONTRACTOR SHALL PROTECT UTILITY DURING INSTALLATION, AND REPAIR ANY RELATED UTILITY DAMAGE AT NO ADDITIONAL COST TO THE OWNER.
2. THE SETTLEMENT ROD SHALL BE LOCATED AT THE CROWN OF THE UTILITY TO BE MONITORED.
3. NOTCH BOTTOM OF PVC CASING TO SNUGGLY FIT TOP OF UTILITY.
4. UTILITY MONITORING POINT SHALL BE PROTECTED BY FLUSH-MOUNTED ROAD BOX WITH LOCKING COVER.
5. CENTRALIZERS SHALL BE SPACED AT THE THIRD POINTS OR EVERY 5 FEET, WHICHEVER IS LESS.

4 UTILITY MONITORING POINT (UMP)

NOT TO SCALE

INSTRUMENTATION SCHEDULE

	SURFACE MONITORING POINT (SMP)	UTILITY MONITORING POINT (UMP)	STRUCTURAL SURFACE MONITORING POINT (SSMP)	EXISTING PIEZOMETER (PZ)*
LAWSON PS BASIN WELL			3	
COMMUNICATION TOWER SLAB			4	
ELECTRICAL BUILDING			1	
TUNNEL	8			
LAWSON PS SITE (PZ-2)				1
INTERMEDIATE SHAFT (PZ-7)				1
COLLIER'S FERRY PS SITE (PZ-13)				1

*EXISTING PIEZOMETERS SHALL BE ABANDONED BY THE CONTRACTOR.

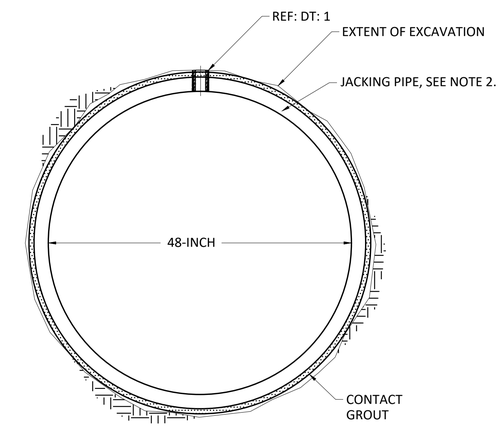

NOTES:

1. GIVEN DIMENSIONS AND THICKNESSES SHALL BE MINIMUMS AND DO NOT CONSIDER CONTRACTOR'S CHOSEN MEANS AND METHODS. CONTRACTOR SHALL BE RESPONSIBLE FOR SELECTION AND DESIGN OF JACKING PIPE OF ADEQUATE DIAMETER AND WALL THICKNESS FOR THEIR CHOSEN MEANS AND METHODS AND IN ACCORDANCE WITH SECTION 33 30 00 MICROTUNNELING.
2. JACKING PIPE SHALL BE IN ACCORDANCE WITH SECTION 33 05 39 REINFORCED CONCRETE PIPE OR SECTION 33 31 13.13 FIBERGLASS PIPE.
3. CONTACT GROUTING SHALL BE PERFORMED IN ACCORDANCE WITH SECTION 33 23 24 CONTACT GROUTING.

5 MICROTUNNEL TYPICAL CROSS SECTION

1"=1-0"

ISSUED FOR BID

Freese and Nichols, Inc.
Texas Registered Engineering Firm F-2144

STATE OF TEXAS
BRIAN CHRISTOPHER OLTMAN
LICENSED
PROFESSIONAL ENGINEER
140672
01/07/2022

FREESE AND NICHOLS
10497 Town and Country Way,
Suite 600
Houston, Texas 77024
Phone - (713) 600-6800
Web - www.freese.com

CITY OF BEAUMONT
COLLIER'S FERRY PUMP STATION

CIVIL
TUNNEL
DETAILS - SHEET 1OF 2

F&N JOB NO.	BMT20326
DATE	01/07/2022
DESIGNED	LVR
DRAWN	WF A
REVISED	-
CHECKED	ACH
FILE NAME	CV-TUN-DT01.dwg

NO.	ISSUE	BY	DATE

VERIFY SCALE 0 1
Bar is one inch on original drawing. If not one inch on this sheet, adjust scale.

SHEET C-69

SEQ. 83

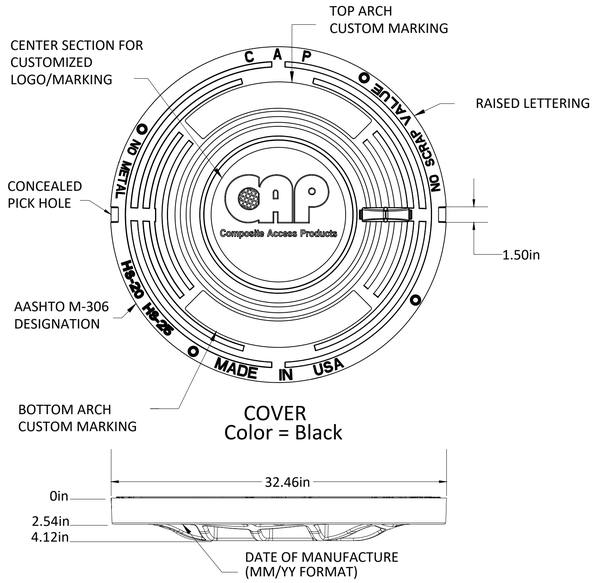

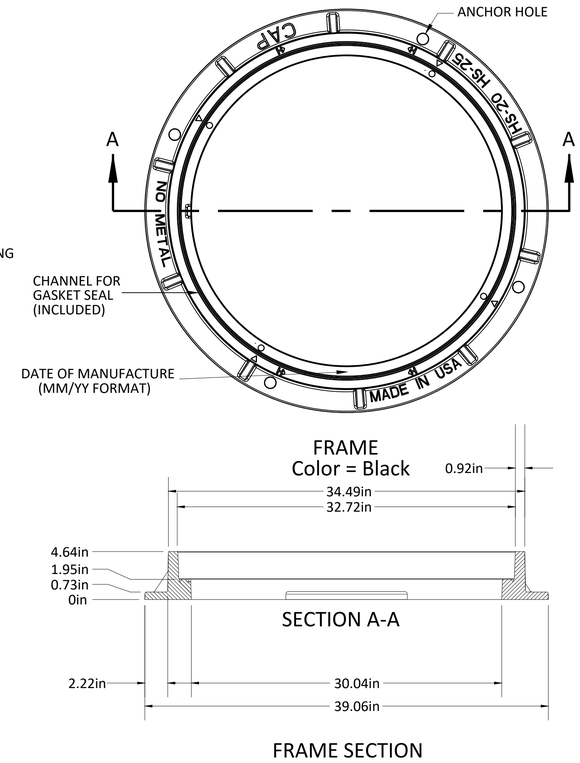

1 CAP WATERTIGHT COMPOSITE COVER

N.T.S.

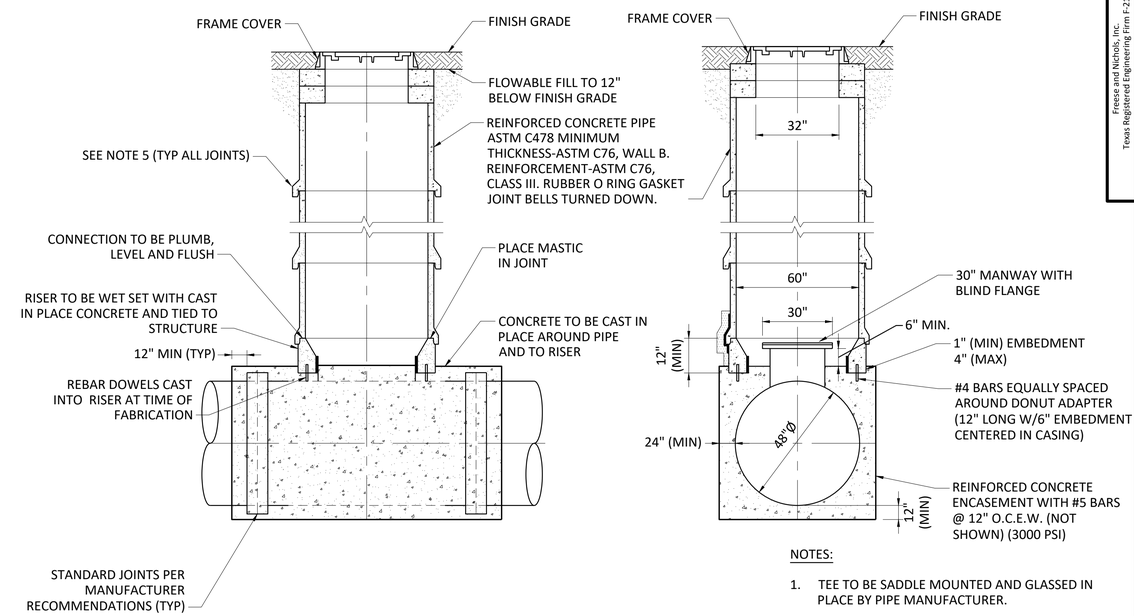

2 TEE-BASE CONCRETE MANHOLE (FLAT TOP)

NOT TO SCALE

NOTES:

1. TEE TO BE SADDLE MOUNTED AND GLASSED IN PLACE BY PIPE MANUFACTURER.
2. MANHOLES WITH A HORIZONTAL DEFLECTION ANGLE SHALL BE MITERED BY THE MANUFACTURER ACCORDING TO HORIZONTAL DEFLECTION AT MANHOLE TABLE, THIS SHEET.
3. CONCRETE SURROUNDING SEWER PIPE SHALL BE AS WIDE AS NECESSARY TO ALLOW FOR 6" MIN. DISTANCE BETWEEN OUTSIDE OF MANHOLE AND EDGE OF TRENCH.
4. PRE-CAST JOINTS SHALL CONFORM TO ASTM C478.
5. THREE, EQUALLY SPACED STAINLESS STEEL JOINT RESTRAINT STRAPS REQUIRED PER JOINT FOR PRECAST MANHOLE TOP AND ALL SECTIONS.
6. MANHOLE RISER SHALL BE BACKFILLED WITH FLOWABLE FILL 12" AROUND RISER TO 12" BELOW GRADE.

HORIZONTAL DEFLECTION AT MANHOLE TABLE

MH STA	TO OF MH RIM ELEVATION (FT)	MH DIAMETER (FT)	WATERTIGHT	DEFLECTION
1+30.92	13.0	5	YES	28° 15' 21" L
13+45.71	3.5	5	YES	24° 19' 13" R

GENERAL NOTES:

1. THE DIAMETER OF SHAFT EXCAVATION SHALL BE DETERMINED BY CONTRACTOR. ANY ENLARGEMENT OF EXCAVATION TO ACCOMMODATE CONTRACTOR'S MEANS AND METHODS SHALL BE AT NO ADDITIONAL COST TO OWNER.
2. THE DESIGN OF THE INITIAL SUPPORT SYSTEM FOR SHAFT EXCAVATION AND TEMPORARY WORKING SLAB SHALL BE PERFORMED BY THE CONTRACTOR AND SHALL BE IN ACCORDANCE WITH SECTION 31 73 15, SHAFT EXCAVATION.
3. SHAFT BACKFILLING SHALL BE PERFORMED IN ACCORDANCE WITH SECTION 35 73 15 SHAFT EXCAVATION. INSTALLATION OF THE FLOWABLE FILL BACKFILL SHALL BE LIMITED TO LIFTS OF A MAXIMUM 10 FEET.

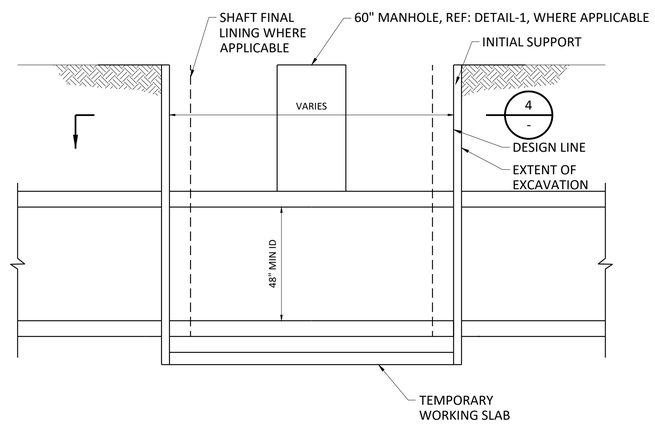

3 SHAFT SECTION

NOT TO SCALE

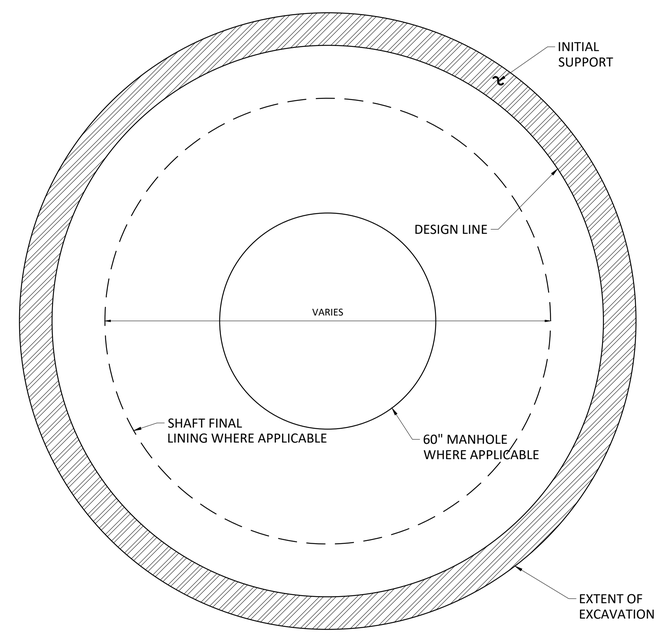

4 SECTIONAL PLAN

NOT TO SCALE

ISSUED FOR BID

Freese and Nichols, Inc.
Texas Registered Engineering Firm F-2144

STATE OF TEXAS
BRIAN CHRISTOPHER OLTMAN
140672
LICENSED
PROFESSIONAL ENGINEER
01/07/2022

FREESE AND NICHOLS
10497 Town and Country Way,
Suite 600
Houston, Texas 77024
Phone - (713) 600-6800
Web - www.freese.com

CITY OF BEAUMONT
COLLIER'S FERRY PUMP STATION

CIVIL
TUNNEL
DETAILS - SHEET 2 OF 2

NO.	ISSUE	BY	DATE

F&N JOB NO. BMT20326
DATE 01/07/2022
DESIGNED L VR
DRAWN WF A
REVISED -
CHECKED A CH
FILE NAME CV-TUN-DT01.dwg

VERIFY SCALE 0 1
Bar is one inch on original drawing. If not one inch on this sheet, adjust scale.

SHEET C-70
SEQ. 84

ACAD Rel: 24.0s (LMS Tech)
Filename: N:\WW\Drawings\CV-TUN-DT01.dwg
Last Saved: 11/29/2021 4:54 PM Saved By: 02139
Plot Date: 1/13/2022 2:31 PM Plot By: 02139 Filename: N:\WW\Drawings\CV-TUN-DT01.dwg

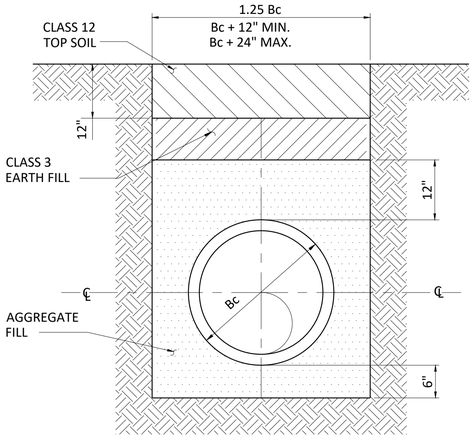

TRENCH TYPE A
TYPICAL TRENCH DETAIL
NOT TO SCALE

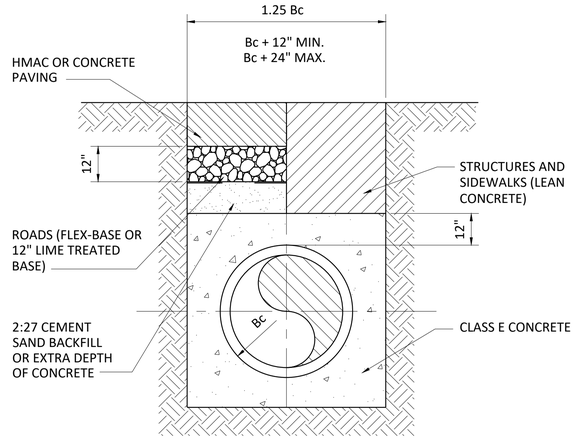

TRENCH TYPE C
UNDER ROADS, STRUCTURES, AND SIDEWALKS
(EXTEND FOR 5'-0" ON EITHER SIDE OF PAVED AREAS)
NOT TO SCALE

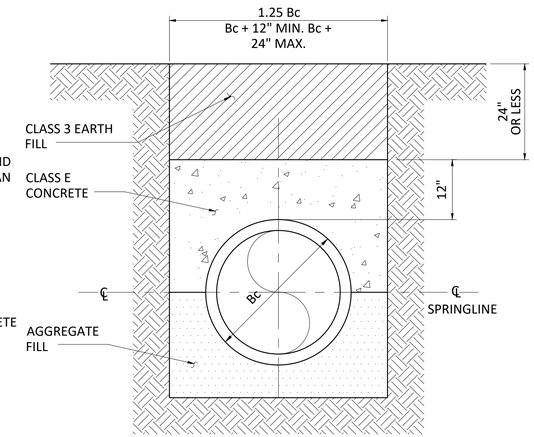

TRENCH TYPE D
SHALLOW BURIAL DEPTH
NOT TO SCALE

1 TRENCH DETAILS
NOT TO SCALE

GENERAL TRENCH NOTES:

1. THIS DRAWING IS ISSUED TO SHOW PIPE BEDDING AND BACKFILL REQUIREMENTS AND NOT FOR THE PURPOSE OF SHOWING TRENCH EXCAVATION REQUIREMENTS RELATED TO TRENCH SAFETY SYSTEMS. SEE OTHER PORTIONS OF THE CONTRACT DOCUMENTS FOR TRENCH SAFETY SYSTEM REQUIREMENTS.
2. MAXIMUM TRENCH WIDTH OF Bc + 24 INCHES MAY BE INCREASED AS REQUIRED TO PROVIDE ROOM FOR SHORING OR OTHER TRENCH SAFETY SYSTEMS, INCLUDING SLOPING OF TRENCH WALLS.
3. DEWATERING OF TRENCHES SHALL BE PERFORMED BY CONTRACTOR AS REQUIRED.
4. UNLESS OTHERWISE SPECIFIED OR SHOWN, USE TRENCH TYPE D FOR SHALLOW YARD PIPING.
5. REFER TO SPECIFICATION 31 05 16 FOR AGGREGATE FILL MATERIAL DETAILS.
6. REFER TO SPECIFICATION 31 05 13 FOR EARTH FILL MATERIAL DETAILS.
7. LOCATIONS FOR TRENCH TYPE SHALL BE AS INDICATED ON THIS SHEET, UNLESS NOTED OTHERWISE.
8. PCCP AND RCCP TRENCH WIDTH SHALL BE Bc + 24" MIN. AND Bc + 36" MAX.
9. FOR FLEXIBLE PIPE COMPLY WITH TRENCH TYPE C FOR SHALLOW BURIAL DEPTH INSTALLATIONS.
10. INSTALLATION OF FLEXIBLE PIPE FROM STRUCTURES SHALL COMPLY WITH TRENCH TYPE C DETAIL. EXTEND CONCRETE ENCASEMENT TO TRENCH DITCH LINE OF A MINIMUM OF 3 FT. PASSED THE FIRST JOINT FROM THE STRUCTURE.

FINAL BACKFILL PLACEMENT

FROM 12" ABOVE THE TOP OF THE PIPE, OR AS SHOWN ON THE DRAWINGS, THE TRENCH OR EXCAVATION SHALL BE BACKFILLED WITH SELECT MATERIAL FROM THE EXCAVATION PLACED IN A MANNER APPROVED BY THE ENGINEER. NO EXCESSIVELY LARGE ROCKS (LARGEST DIMENSION GREATER THAN 2") OR DEBRIS OF ANY SORT ARE TO BE PUT INTO THE BACKFILL, AND APPRECIABLE WEIGHT OF ANY SORT, OTHER THAN BACKFILL, SHALL NOT BE ALLOWED ON THE PIPE UNTIL IT HAS BEEN COVERED TO SUCH A DEPTH THAT DAMAGE TO THE PIPE OR JOINTS WILL NOT OCCUR. THE TOP 6" SHALL BE FREE FROM ROCK.

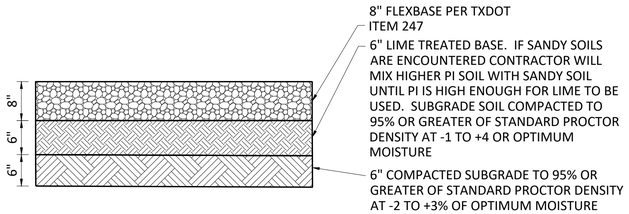

2 FLEXBASE PAVING DETAIL
NOT TO SCALE

AGGREGATE FILL MATERIAL

	PIPE MATERIAL/TYPE	AGGREGATE FILL
1	REINFORCED CONCRETE	CLASS 2
2	CONCRETE CYLINDER	CLASS 2
3	PLAIN CONCRETE	CLASS 10
4	STEEL	CLASS 3
5	DUCTILE IRON/CAST IRON	CLASS 3
6	CORRUGATED METAL	CLASS 3
7	PLASTIC	CLASS 10
8	VITRIFIED CLAY	CLASS 10
9	FIBERGLASS REINFORCED POLYMER	CLASS 10 COMPACTED TO 95% SPD OR CLASS 11,OR CLASS 12
10	STEEL REINFORCED POLYETHYLENE	CLASS 10

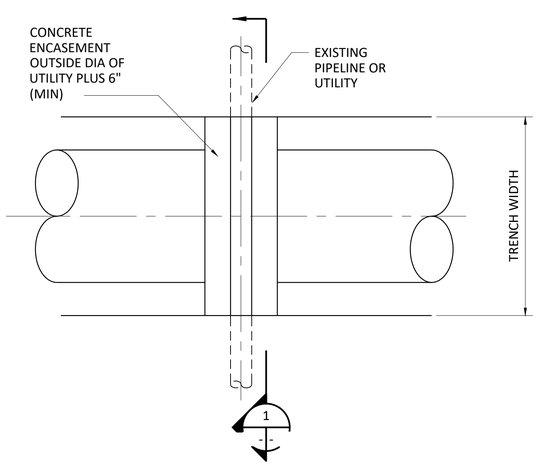

3 TYPICAL DETAIL OF PIPELINE OR UTILITY CROSSING
NOT TO SCALE

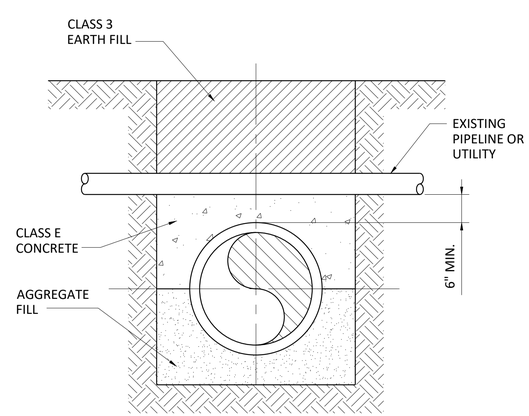

3 SECTION CUT
NOT TO SCALE

NOTES BY SYMBOL "⬡":

1. COMPACT PIPE "A'" BACKFILL TO ABOVE PIPE "B" PIPE ZONE TO 95% MAXIMUM DENSITY PER ASTM D694.
2. EXCAVATE PIPE "B" TRENCH.
3. USE PIPE EMBEDMENT AS SPECIFIED ON DRAWING FOR PIPE "B".
4. WHEN DISTANCE BETWEEN TWO PARALLEL PIPES (PIPES "C" AND "D") AT APPROXIMATELY THE SAME ELEVATION IS SUCH THAT SEPARATE TRENCHED CANNOT BE DUG, THEN USE THIS DETAILS.
5. PIPE EMBEDMENT SHALL BE AS SPECIFIED ON DRAWING FOR SHALLOWEST PIPE (PIPE "C"). EMBEDMENT FOR POLYETHYLENE WRAPPED OR PLASTIC PIPE SHALL EXTEND TO 12" OVER THE TOP OF THE PIPE.

ISSUED FOR BID

Freese and Nichols, Inc.
Texas Registered Engineering Firm F-2144
01-19-2022
STATE OF TEXAS
Samuel Chukwuka Okolo
118309
LICENSED
PROFESSIONAL ENGINEER
FREESE AND NICHOLS
10497 Town and Country Way,
Suite 600
Houston, Texas 77024
Phone - (713) 600-6800
Web - www.freese.com

CITY OF BEAUMONT
COLLIER'S FERRY PUMP STATION
CIVIL
MISCELLANEOUS CIVIL DETAILS
SHEET 1 OF 2

NO.	ISSUE	BY	DATE

F&N JOB NO. BMT20326
DATE 01/07/2022
DESIGNED LVR
DRAWN WFA
REVISED -
CHECKED ACH
FILE NAME CV-MISC-CV-DT-NEW01.dwg

VERIFY SCALE 0 1 Bar is one inch on original drawing. If not one inch on this sheet, adjust scale.

SHEET C-71
SEQ. 85

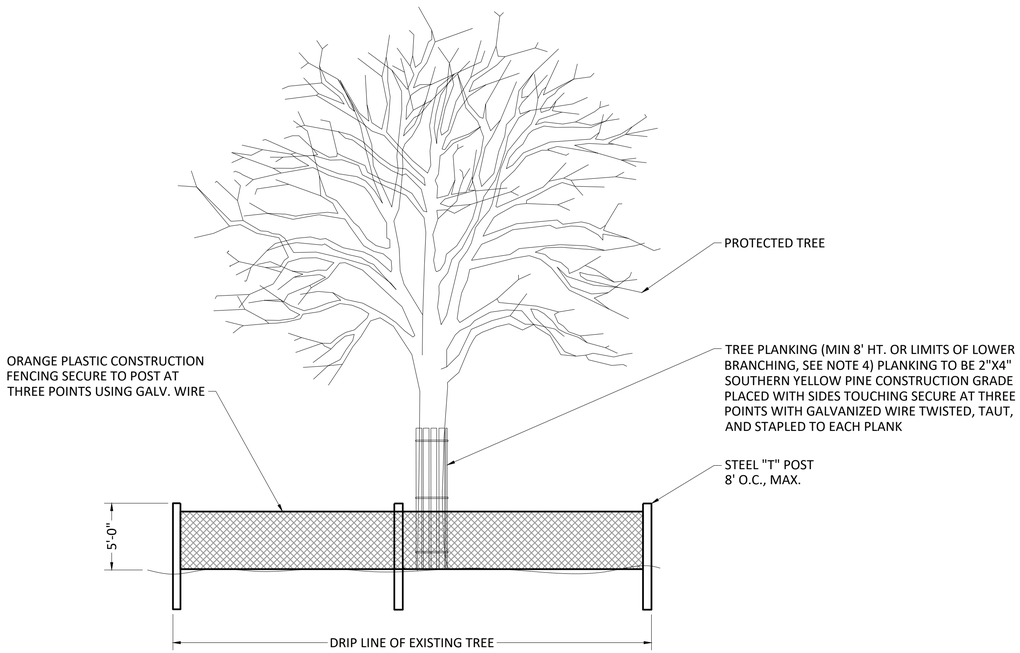

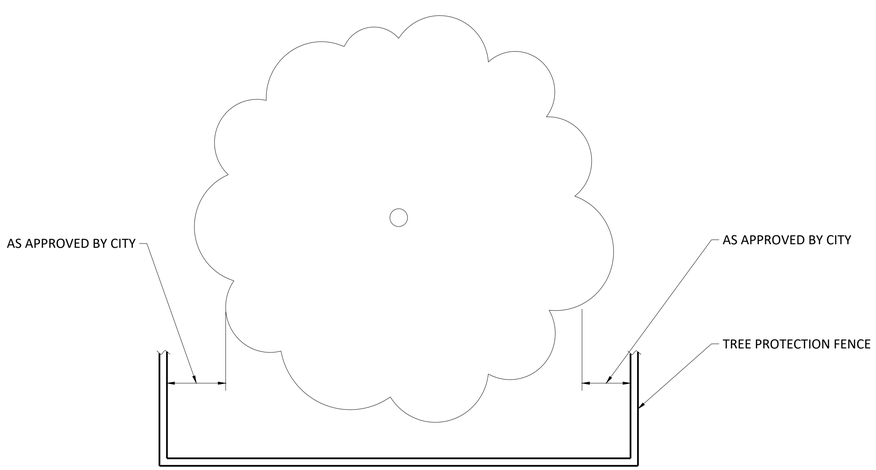

1 TREE PROTECTION DETAIL

NOT TO SCALE

NOTES:

ALL TREES INDICATED TO BE PROTECTED SHALL BE PROTECTED THROUGHOUT CONSTRUCTION WITH TREE PROTECTION.

TREE PROTECTION FENCING SHALL BE INSTALLED PRIOR TO THE COMMENCEMENT OF ANY SITE PREPARATION WORK (CLEARING, GRUBBING OR GRADING).

FENCING SHALL BE LOCATED AS SHOWN ON DRAWINGS, OR COMPLETELY SURROUND THE TREE OR CLUSTERS OF TREES AND WILL BE LOCATED AT THE OUTERMOST LIMITS OF THE TREE BRANCHES (DRIPLINE). THE DRIPLINE DEFINES THE 'ROOT ZONE'. WITHIN THE LIMITS OF FENCING, THE CONTRACTOR SHALL PREVENT THE FOLLOWING FROM OCCURRING WITHOUT PRIOR WRITTEN AUTHORIZATION FROM THE OWNER'S REPRESENTATIVE:

A. SOIL COMPACTION IN THE ROOT ZONE AREA RESULTING FROM VEHICULAR TRAFFIC OR STORAGE OF EQUIPMENT OR MATERIALS.
B. ROOT ZONE DISTURBANCES DUE TO GRADE CHANGES (GREATER THAN 3" CUT OR FILL) OR TRENCHING NOT REVIEWED OR AUTHORIZED.
C. WOUNDS TO EXPOSED ROOTS, TRUNK, OR LIMBS BY MECHANICAL EQUIPMENT.
D. OTHER ACTIVITIES DETRIMENTAL TO TREES SUCH AS CHEMICAL STORAGE, CONCRETE TRUCK CLEANING, AND FIRES.

WHERE EXCEPTIONS RESULT IN A FENCE BEING CLOSER THAN 4 FEET TO A TRUNK, PROTECT THE TRUNK WITH STRAPPED-ON PLANKING TO A HEIGHT OF 8' (OR TO THE LIMITS OF THE LOWER BRANCHING).

ALL GRADING WITHIN PROTECTED ROOT ZONE AREAS SHALL BE DONE BY HAND TO MINIMIZE ROOT DAMAGE AND SOIL COMPACTION. PRIOR TO GRADING, RELOCATE PROTECTIVE FENCING TO 2 FEET BEHIND THE GRADE CHANGE AREA. GRADE SHALL REMAIN UNCHANGED WHERE POSSIBLE.

ANY ROOT SEVERED BY CONSTRUCTION ACTIVITY SHALL BE PRUNED FLUSH WITH THE SOIL. BACKFILL ROOT AREAS WITH GOOD QUALITY TOP SOIL AS SOON AS POSSIBLE. IF EXPOSED ROOT AREAS ARE NOT BACKFILLED WITHIN 2 DAYS, COVER THEM WITH ORGANIC MATERIAL IN A MANNER WHICH REDUCES SOIL TEMPERATURE AND MINIMIZES DRYING OF THE ROOT DUE TO EVAPORATION.

TREES IMPACTED BY CONSTRUCTION ACTIVITIES SHALL BE WATERED THOROUGHLY ONCE A WEEK DURING PERIODS OF HOT AND/OR DRY WEATHER. TREE CROWNS SHALL BE SPRAYED WITH WATER PERIODICALLY TO REDUCE DUST ACCUMULATION ON THE LEAVES.

NO LANDSCAPE TOPSOIL DRESSING GREATER THAN 3" MAXIMUM SHALL BE PERMITTED WITHIN THE DRIPLINE OF TREES. NO PERMANENT SOIL OR MULCH IS PERMITTED ON THE ROOT FLARE OF ANY TREE.

PRUNING SHALL BE PERFORMED BY THE CONTRACTOR TO PROVIDE CLEARANCE FOR STRUCTURES OR CONSTRUCTION ACTIVITIES. PRUNING SHALL TAKE PLACE BEFORE CONSTRUCTION BEGINS, ONLY WITH PRIOR APPROVAL FROM CITY'S ENGINEER. ALL PRUNING MUST BE ACCORDING TO RECOGNIZED, APPROVED STANDARDS OF THE INDUSTRY (REFERENCE THE NAA PRUNING STANDARDS), AND BY AN EXPERIENCED AND QUALIFIED ARBORIST WHOSE PRIMARY BUSINESS IS TREE CARE.

PROVIDE CORRECTIVE PRUNING AT THE COMPLETION OF CONSTRUCTION TO REMOVE ANY BROKEN OR DAMAGED LIMBS, UNDER THE DIRECTION OF THE CITY'S ENGINEER.

ROOT PRUNING REQUIRED FOR ANY CONSTRUCTION IN THE DRIP LINE OF A TREE, ROOT PRUNE BY TRENCHING A CLEAN 4" WIDE X 24" DEEP CUT BETWEEN THE DISTURBED AND UNDISTURBED ROOT ZONES WITH IRRIGATION TRENCHER TO MINIMIZE DAMAGE TO REMAINING ROOTS. MARK AND REVIEW TRENCH LINE WITH CITY'S ENGINEER PRIOR TO TRENCHING.

AS SOON AS 4" WIDE X 24" DEEP TRENCH IS CUT, EXPOSED ROOTS SHALL BE HAND CUT TO CREATE CLEAN ROOT CUTS. AS SOON AS HAND CUTS ARE COMPLETE, BACKFILL TRENCH WITH A SANDY LOAM TOPSOIL PLACED IN 6" LIFTS, AND COMPACTED AS REQUIRED BY SPECIFICATIONS.

IN AREAS WHERE LIME STABILIZATION ABUTS OR ENCROACHES UPON ROOT ZONES, AND WHERE ROOT PRUNING IS CALLED FOR, INSTALL 10-MIL. PLASTIC SHEETING TO FULL DEPTH OF ROOT PRUNING TRENCH AND 6" OVER TOP. CUT AND REMOVE EXPOSED PLASTIC AT COMPLETION OF WORK.

ISSUED FOR BID

Freese and Nichols, Inc.
Texas Registered Engineering Firm F-2144

STATE OF TEXAS
SOMARTH CHAUDHURI
Registered Professional Engineer
118309
LICENSED
PROFESSIONAL ENGINEER
01-19-2022

FREESE AND NICHOLS
10497 Town and Country Way,
Suite 600
Houston, Texas 77024
Phone - (713) 600-6800
Web - www.freese.com

CITY OF BEAUMONT
COLLIER'S FERRY PUMP STATION

CIVIL
MISCELLANEOUS CIVIL DETAILS
SHEET 2 OF 2

NO.	ISSUE	BY	DATE

F&N JOB NO. BMT20326
DATE 01/07/2022
DESIGNED LVR
DRAWN WFA
REVISED -
CHECKED ACH
FILE NAME CV-MISC-CV-DT-NEW01.dwg

VERIFY SCALE 0 1 Bar is one inch on original drawing. If not one inch on this sheet, adjust scale.

SHEET C-72
SEQ. 86

ACAD Rel: 24.0s (LMS Tech)
Filename: N:\WW\Drawings\CV-MISC-CV-DT-NEW01.dwg
Last Saved: 7/6/2021 11:02 AM Saved By: 02139

Plot Date: 1/13/2022 2:31 PM Plot By: 02139 Filename: N:\WW\Drawings\CV-MISC-CV-DT-NEW01.dwg

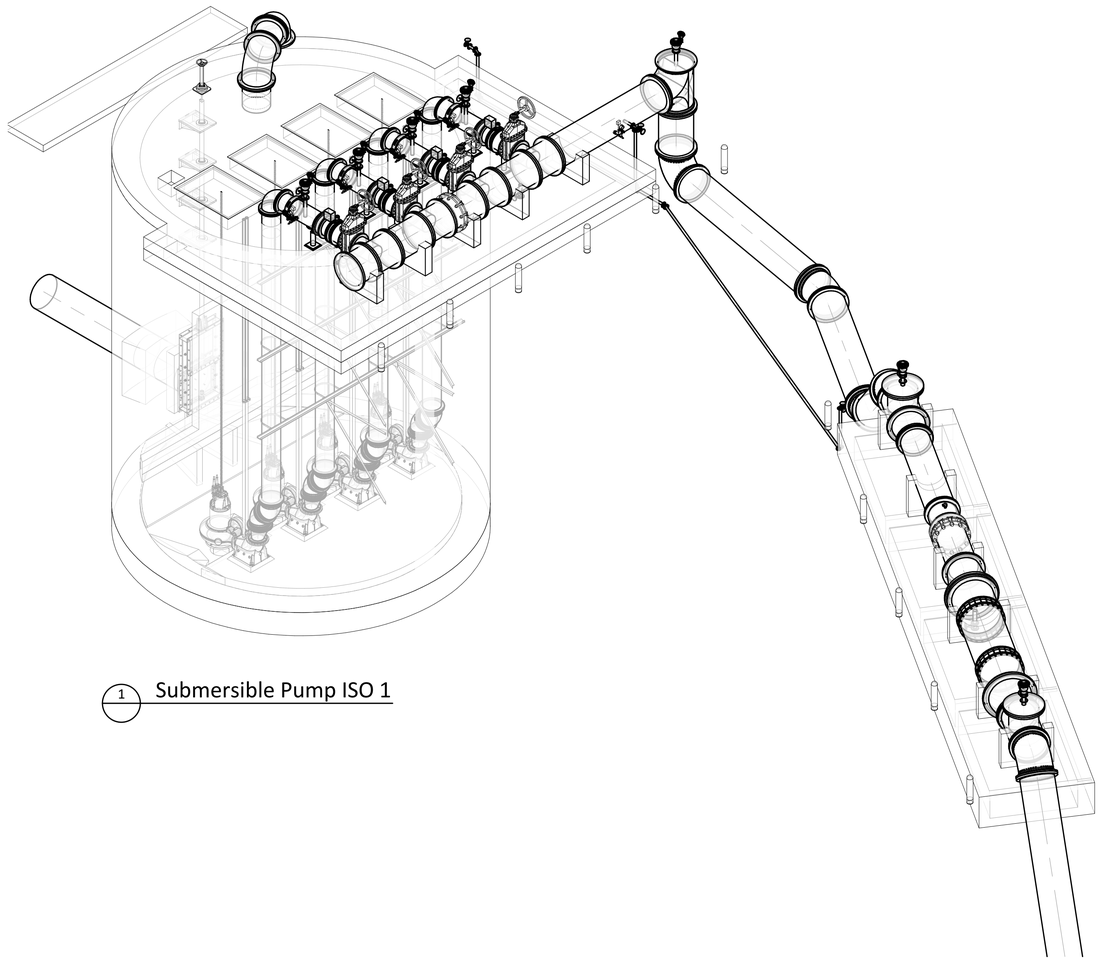

1 Submersible Pump ISO 1

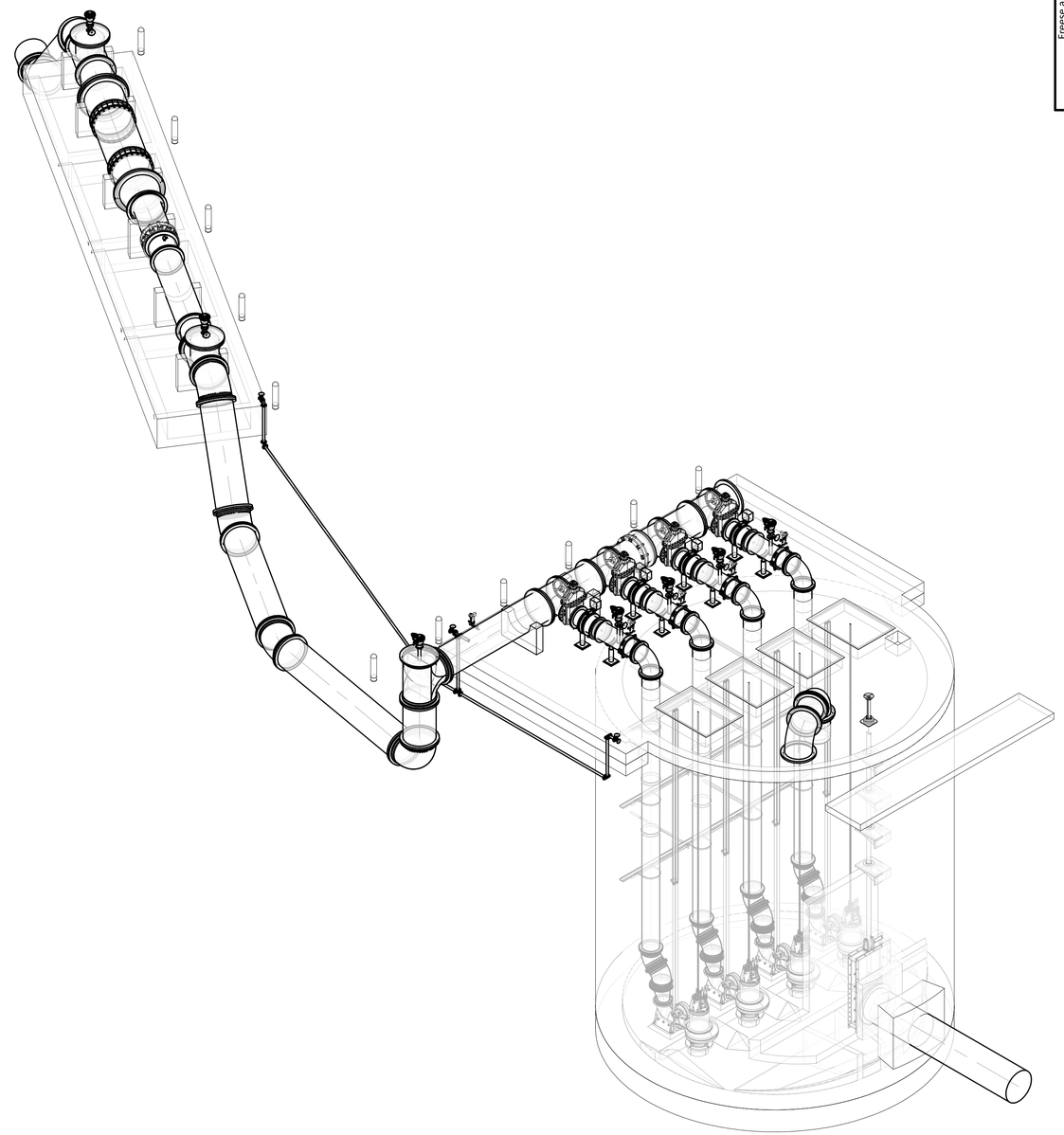

2 Submersible Pump ISO 2

NOTE:
THIS ISOMETRIC DRAWING IS FOR ILLUSTRATION PURPOSES ONLY. PLEASE REFERENCE SUBSEQUENT PLAN SHEETS FOR CONSTRUCTION DETAILS.

ISSUED FOR BID

Freese and Nichols, Inc.
Texas Registered Engineering Firm F- 2144

STATE OF TEXAS
SOMNATH CHILUKURI
118309
LICENSED
PROFESSIONAL ENGINEER
01-19-2022

FREESE AND NICHOLS
10497 Town and Country Way,
Suite 500
Houston, TX 77024
Phone - (713) 600-6800
Web - www.freese.com

City of Beaumont
COLLIER'S FERRY PUMP STATION

MECHANICAL
COLLIER'S FERRY PUMP STATION
COLLIER'S FERRY PUMP STATION RENDERING

F&N JOB NO.	BMT20326
DATE	01/07/2022
DESIGNED	LVR
DRAWN	WFA
REVISED	-
CHECKED	ACH
FILE NAME	TU-BMT20326-PST-R21

NO.	ISSUE	BY	DATE

VERIFY SCALE 0 1
Bar is one inch on original drawing. If not one inch on this sheet, adjust scale.

SHEET M-1
SEQ. 87

Plot Date: 1/13/2022 2:50:30 PM

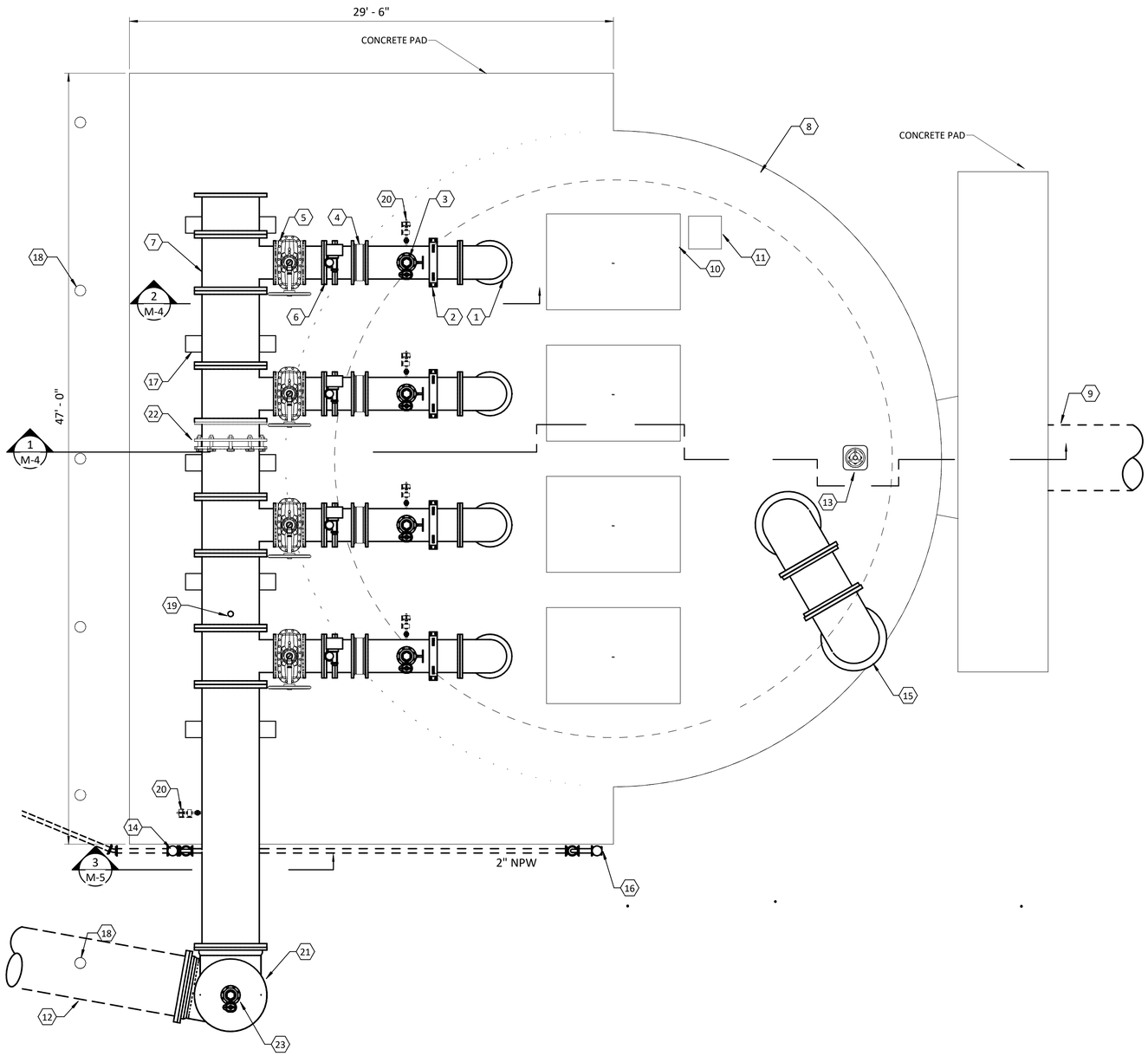

1 PUMP STATION TOP PLAN
1/4" = 1'-0"

GENERAL NOTES

1. UTILIZE PIPE SLEEVE AND MODULAR MECHANICAL EXPANDING RUBBER SEAL ON ALL PIPE PENETRATRIONS IN THE WET WELL SLAB PER DETAIL 342 (TYP S)/M-9.
2. ALL ABOVE GROUND PIPING SHALL BE EPOXY LINED STEEL PIPE WITH COATING PER SECTION 09 97 16 OR DUCTILE IRON PIPE. ALL BURIED PIPING, EXCEPT FOR THE MICROTUNNEL, SHALL BE POLYURETHANE COATED STEEL PIPE WITH A MORTAR LINING OR DUCTILE IRON PIPE WITH RESTRAINED MECHANICAL JOINTS

NOTES BY SYMBOL " X "

1 24" 90 DEGREE BEND
2 MECHANICAL COUPLING, RIGID
3 4" COMBINATION AIR AND VACUUM VALVE, 324/M-7
4 24" CHECK VALVE
5 24" MANUALLY OPERATED GATE VALVE
6 24" MOTOR OPERATED BUTTERFLY VALVE
7 42" DISCHARGE HEADER
8 34' INTER DIA. (39' OUTER DIA.) WET WELL
9 48" TUNNEL
10 5' x 7' HATCH, 4 TYP
11 2' x 2' HATCH
12 42" PIPE
13 48" X 48" SLIDE GATE OPERATOR
14 2" TAP FOR NPW
15 36" VENT, 5/M-10
16 YARD HYDRANT (TYPE B),329/M-7 AND POST MOUNTED UTILITY STATION, 362/M-7
17 CONCRETE PIPE SUPPORT ,5/S-13 AND 6/S-13
18 BOLLARD,547/M-9
19 4" DRAIN AND GATE VALVE ON UNDERSIDE OF PIPE
20 PRESSURE GAUGE AND PRESSURE TRANSMITTER
21 42"X42" TEE WITH ACCESS MANWAY
22 42" FLANGED COUPLING ADAPTOR
23 8" COMBINATION AIR AND VACUUM VALVE, 324/M-7

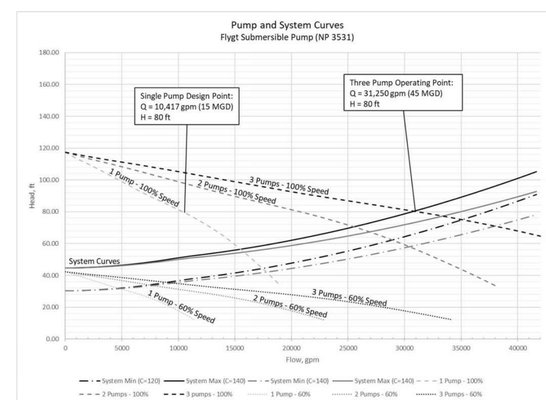

0 2' 4' 8'
1/4"=1'-0"

NORTH

ISSUED FOR BID

Freese and Nichols, Inc.
Texas Registered Engineering Firm F- 2144

01-19-2022

STATE OF TEXAS
SOMNATH CHILUKURI
118309
LICENSED
PROFESSIONAL ENGINEER

Somnath Chilukuri

FREESE AND NICHOLS
10497 Town and Country Way,
Suite 500
Houston, TX 77024
Phone - (713) 600-6800
Web - www.freese.com

City of Beaumont
COLLIER'S FERRY PUMP STATION

MECHANICAL
COLLIER'S FERRY PUMP STATION
PLAN

F&N JOB NO.	BMT20326
DATE	01/07/2022
DESIGNED	LVR
DRAWN	WFA
REVISED	Approver
CHECKED	ACH
FILE NAME	TU-BMT20326-PST-R21

NO.	ISSUE	BY	DATE

VERIFY SCALE 0 1
Bar is one inch on original drawing. If not one inch on this sheet, adjust scale.

SHEET M-2
SEQ. 88

Plot Date: 1/14/2022 2:28:23 PM

NOTES BY SYMBOL " X "

1 15 MGD SUBMERSIBLE PUMP
2 24" PUMP DISCHARGE PIPE
3 PUMP CHAIN, 548/M-9
4 48" x 48" SLIDE GATE, SLU-0201
5 CONCRETE BAFFLE WALL, 1/S-3
6 CONCRETE DIVIDER WALL, 1/S-3
7 34' INTER DIA. (39' OUTER DIA.) WET WELL
8 PIPE ENCASEMENT, 2/S-6
9 PUMP GUIDE BAR, 548/M-9
10 CONCRETE SPLITER WALL, 1/S-3
11 CONCRETE SIDE FILLET, 1/S-3
12 FLOOR CONE, 200/M-9

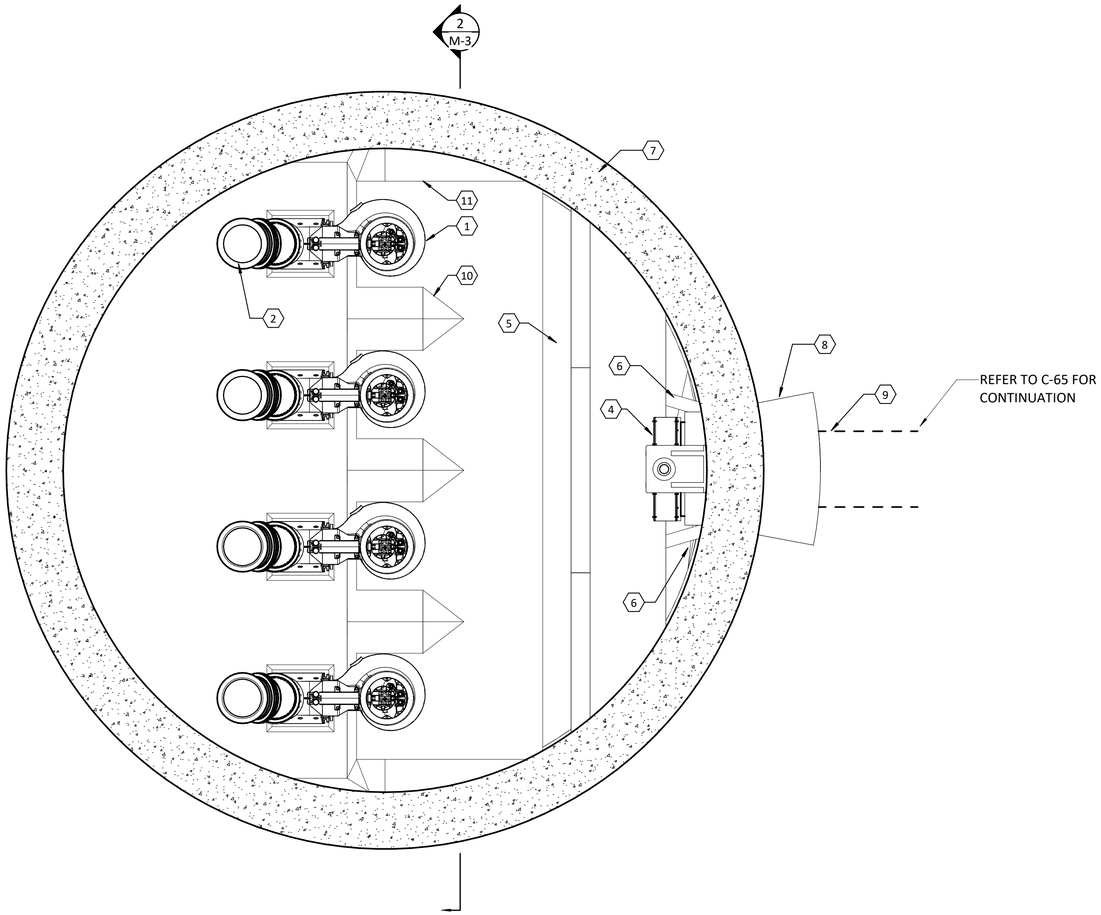

1 PUMP STATION BOTTOM PLAN
1/4" = 1'-0"

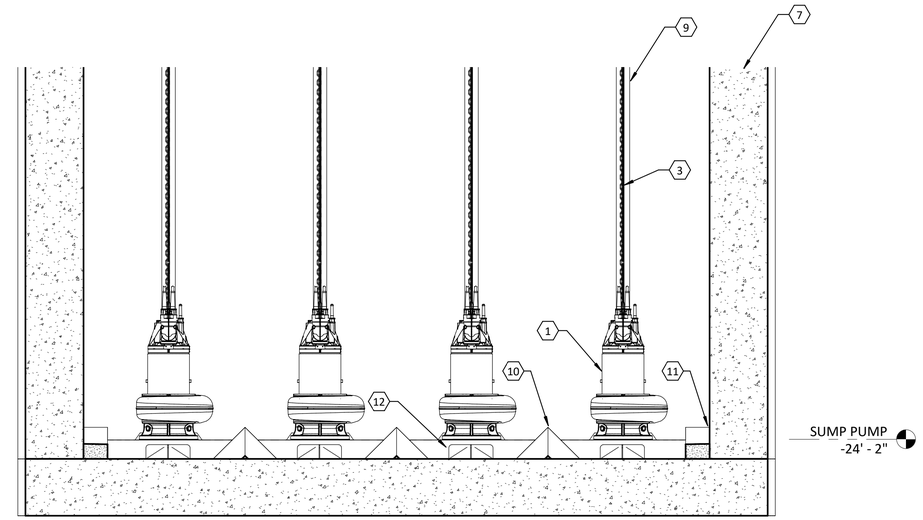

* DISCHARGE PIPING NOT SHOWN FOR CLARITY

2 M-3 PUMP STATION WET WELL SECTION
1/4" = 1'-0"

ISSUED FOR BID

Freese and Nichols, Inc.
Texas Registered Engineering Firm F-2144

STATE OF TEXAS
Samuel Chukwuka Okolo
18309
LICENSED
PROFESSIONAL ENGINEER
01-19-2022

FREESE AND NICHOLS
10497 Town and Country Way,
Suite 500
Houston, TX 77024
Phone - (713) 600-6800
Web - www.freese.com

City of Beaumont
COLLIER'S FERRY PUMP STATION

MECHANICAL
COLLIER'S FERRY PUMP STATION
BOTTOM PLAN

F&N JOB NO. BMT20326
DATE 01/07/2022
DESIGNED LVR
DRAWN WFA
REVISED Approver
CHECKED Checker
FILE NAME TU-BMT20326-PST-R21

NO.	ISSUE	BY	DATE

VERIFY SCALE 0 1
Bar is one inch on original drawing. If not one inch on this sheet, adjust scale.

SHEET M-3
SEQ. 89

Plot Date: 1/13/2022 2:50:47 PM

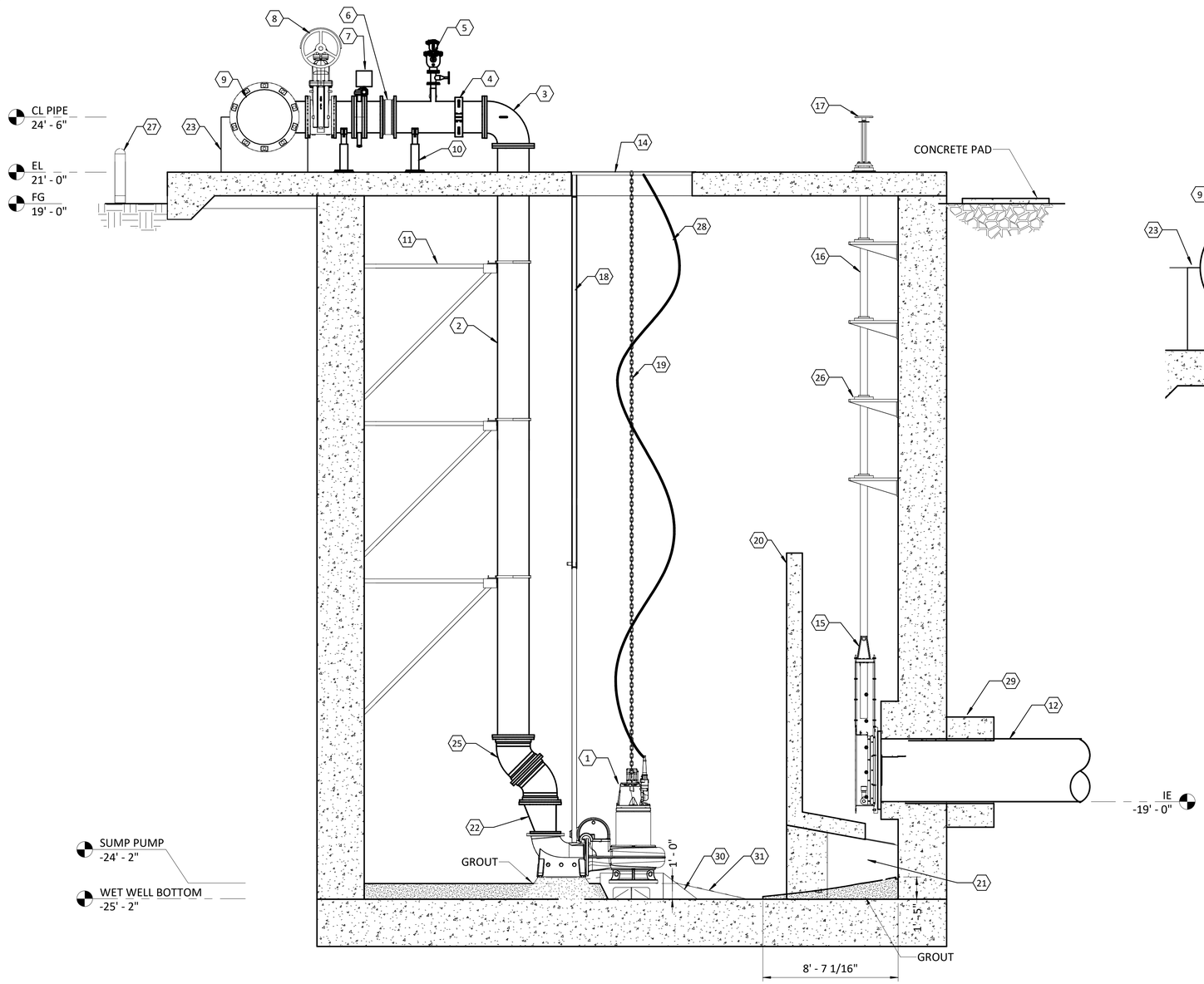

1 M-2 PUMP STATION SECTION
1/4" = 1'-0"

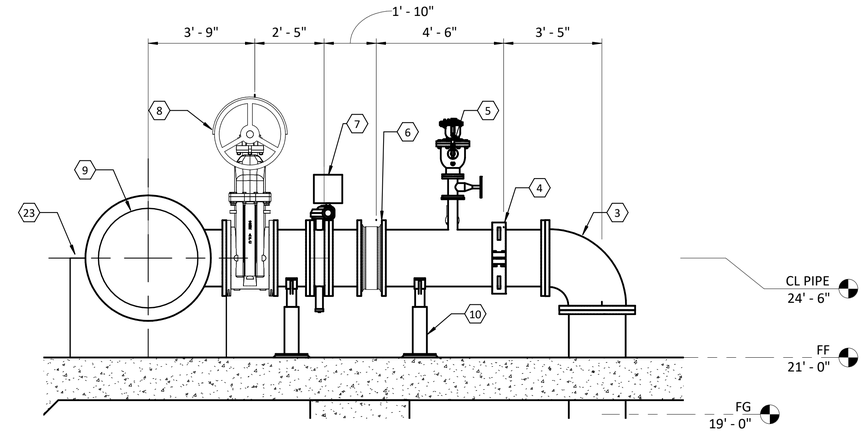

2 M-2 DISCHARGE PIPING SECTION
3/8" = 1'-0"

NOTES BY SYMBOL " X "

1 15 MGD SUBMERSIBLE PUMP
2 24" PUMP DISCHARGE PIPE
3 24" 90 DEGREE BEND
4 MECHANICAL COUPLING
5 4" COMBINATION AIR AND VACUUM VALVE, 324/M-7
6 24" CHECK VALVE
7 24" MOTOR OPERATED BUTTERFLY VALVE
8 24" MANUALLY OPERATED GATE VALVE
9 42" DISCHARGE HEADER
10 ADJUSTABLE PIPE SUPPORT RESTRAINED,(TYPE F) 340/M-7
11 VERTICAL PIPE SUPPORT, 1/M-8
12 48" TUNNEL
14 5' x 7' HATCH
15 48" x 48" SLIDE GATE
16 STEM
17 SLIDE GATE OPERATOR
18 PUMP GUIDE BAR, 548/M-9
19 PUMP CHAIN, 548/M-9
20 CONCRETE BAFFLE WALL, RE:STR
21 CONCRETE DIVIDER WALL, RE:STR
22 16" X 24" ECCENTRIC REDUCER
23 CONCRETE PIPE SUPPORT ,5/S-13 AND 6/S-13
25 24" 45 DEGREE BEND
26 STEM GUIDE, SEE NOTE 2
27 BOLLARD, 547/M-9
28 PUMP POWER AND CONTROL CABLES
29 PIPE ENCASEMENT, 2/S-6
30 CONCRETE SPLITTER WALL, 1/S-3
31 CONCRETE SIDE FILLET, 1/S-3

GENERAL NOTES

1. 54" SPOOL PIPE CAN BE REMOVED FOR INSERTION OF A PIG TO CLEAN THE LINE. WHEN CONSTRUCTION OF TRANSMISSION LINE IS COMPLETE (BY OTHERS) THE PIG CAN BE RETRIEVED AT PINE ST SWTP.
2. CONTRACTOR TO PROVIDE TO THE CITY A 36" SPOOL PIPE TO MATCH THE LAY LENGTH OF THE FLOW METER. IF FLOW METER REMOVED FOR MAINTENANCE, SPOOL PIPE MAY BE INSTALLED IN ITS PLACE TO MAINTAIN OPERATION OF PUMP STATION. SPOOL PIPE TO BE PER DETAIL 4/M-10.
3. ALL BURIED PIPE JOINTS SHALL BE RESTRAINED MECHANICAL JOINTS.
4. ALL ABOVE GROUND PIPING SHALL BE EPOXY LINED STEEL PIPE WITH COATING PER SECTION 09 97 16 OR DUCTILE IRON PIPE. ALL BURIED PIPING, EXCEPT FOR THE MICROTUNNEL, SHALL BE POLYURETHANE COATED STEEL PIPE WITH A MORTAR LINING OR DUCTILE IRON PIPE WITH RESTRAINED MECHANICAL JOINTS.

0 2' 4' 8'
1/4"=1'-0"

ISSUED FOR BID

Freese and Nichols, Inc.
Texas Registered Engineering Firm F- 2144
STATE OF TEXAS
SOMNATH CHILUKURI
118309
LICENSED
PROFESSIONAL ENGINEER
01-19-2022
Somnath Chilukuri

FREESE AND NICHOLS
10497 Town and Country Way,
Suite 500
Houston, TX 77024
Phone - (713) 600-6800
Web - www.freese.com

City of Beaumont
COLLIER'S FERRY PUMP STATION

MECHANICAL
COLLIER'S FERRY PUMP STATION
SECTION VIEW

F&N JOB NO.	BMT20326
DATE	01/07/2022
DESIGNED	LVR
DRAWN	WFA
REVISED	Approver
CHECKED	ACH
FILE NAME	TU-BMT20326-PST-R21

NO.	ISSUE	BY	DATE

VERIFY SCALE 0 1
Bar is one inch on original drawing. If not one inch on this sheet, adjust scale.

SHEET M-4
SEQ. 90

Plot Date: 1/14/2022 2:28:26 PM

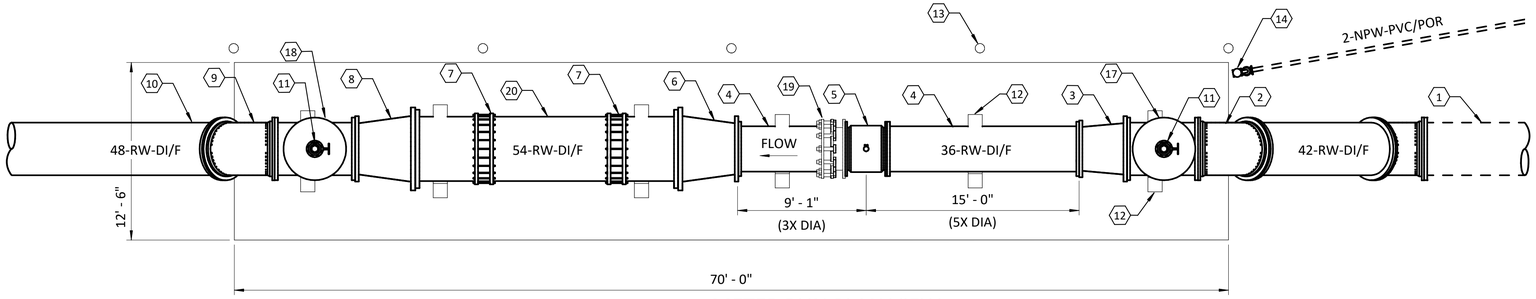

1 METER RUN PLAN VIEW
3/16" = 1'-0"

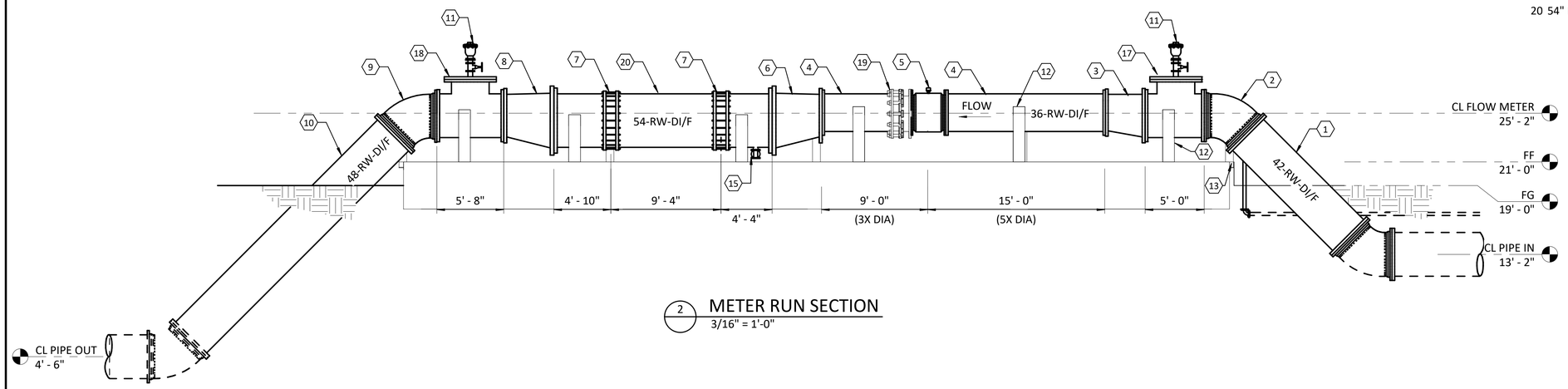

2 METER RUN SECTION
3/16" = 1'-0"

NOTES BY SYMBOL "⬡"

1 42" PIPE
2 42" 45 DEGREE BEND
3 36" X 42" REDUCER
4 36" SPOOL PIPE
5 36" FLOW METER, SEE NOTE 2
6 36" X 54" REDUCER
7 54" FLEX COUPLING
8 48" X 54" REDUCER
9 48" 45 DEGREE BEND
10 48" TRANSMISION LINE
11 4" COMBINATION AIR AND VACUUM VALVE, 324/M-7
12 CONCRETE PIPE SUPPORT ,5/S-13 AND 6/S-13
13 BOLLARD, 547/M-9
14 YARD HYDRANT, 329/M-7, AND POST MOUNTED UTILITY STATION, 362/M-7
15 4" DRAIN AND GATE VALVE
16 2" PVC TEE
17 42"X36" TEE WITH ACCESS MANWAY
18 48"X36" TEE WITH ACCESS MANWAY
19 36" FLEXIBLE COUPLING ADAPTOR
20 54" PIPE, NOTE 1

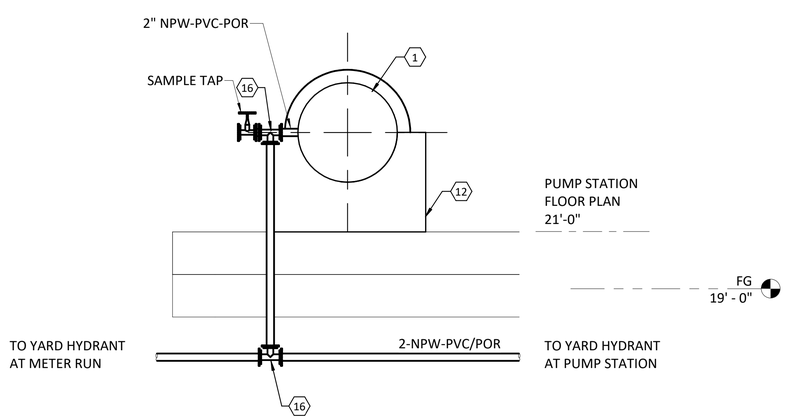

3 M-2 NPW CONNECTION
3/8" = 1'-0"

GENERAL NOTES

1. 54" SPOOL PIPE CAN BE REMOVED FOR INSERTION OF A PIG TO CLEAN THE LINE. WHEN CONSTRUCTION OF TRANSMISSION LINE IS COMPLETE (BY OTHERS) THE PIG CAN BE RETRIEVED AT PINE ST SWTP.

2. CONTRACTOR TO PROVIDE TO THE CITY A 36" SPOOL PIPE TO MATCH THE LAY LENGTH OF THE FLOW METER. IF FLOW METER REMOVED FOR MAINTENANCE, SPOOL PIPE MAY BE INSTALLED IN ITS PLACE TO MAINTAIN OPERATION OF PUMP STATION. SPOOL PIPE TO BE PER DETAIL 4/M-10.

3. ALL BURIED PIPE JOINTS SHALL BE RESTRAINED MECHANICAL JOINTS.

4. ALL ABOVE GROUND PIPING SHALL BE EPOXY LINED STEEL PIPE WITH COATING PER SECTION 09 97 16 OR DUCTILE IRON PIPE. ALL BURIED PIPING, EXCEPT FOR THE MICROTUNNEL, SHALL BE POLYURETHANE COATED STEEL PIPE WITH A MORTAR LINING OR DUCTILE IRON PIPE WITH RESTRAINED MECHANICAL JOINTS.

ISSUED FOR BID

Freese and Nichols, Inc.
Texas Registered Engineering Firm F- 2144

FREESE AND NICHOLS
10497 Town and Country Way,
Suite 500
Houston, TX 77024
Phone - (713) 600-6800
Web - www.freese.com

City of Beaumont
COLLIER'S FERRY PUMP STATION

MECHANICAL
COLLIER'S FERRY PUMP STATION
METER RUN PLAN AND SECTION

F&N JOB NO.	BMT20326
DATE	01/07/2022
DESIGNED	LVR
DRAWN	WFA
REVISED	Approver
CHECKED	ACH
FILE NAME	TU-BMT20326-PST-R21

NO.	ISSUE	BY	DATE

VERIFY SCALE 0 1
Bar is one inch on original drawing. If not one inch on this sheet, adjust scale.

SHEET M-5
SEQ. 91

Plot Date: 1/14/2022 2:28:28 PM

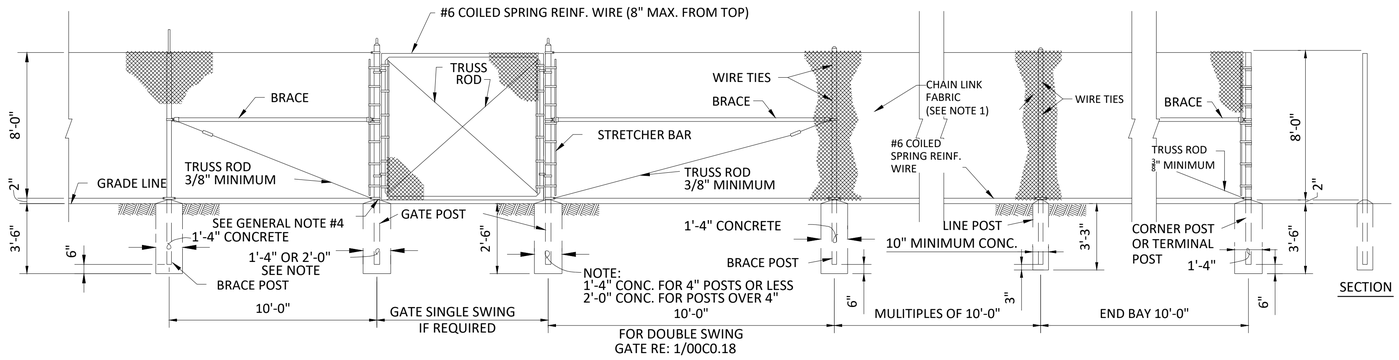

CHAIN LINK FABRIC FENCE

2 N.T.S.

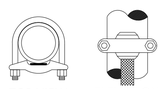

DETAIL OF BONDING GATE FRAMES TO SUPPORTING POST

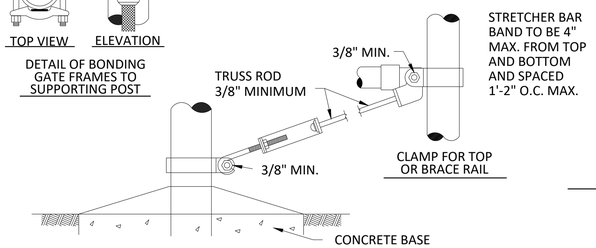

TRUSS ROD & BAND

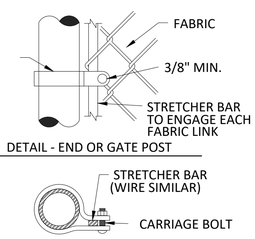

DETAIL - END OR GATE POST

PLAN AT BANDS

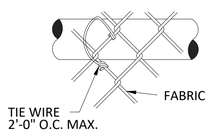

WIRE TIES FOR TOP OR BRACE RAIL

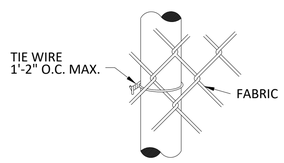

WIRE TIES FOR POST

FASTENING DETAILS - SIMILAR TUBULAR POST OR H COLUMNS

4 N.T.S.

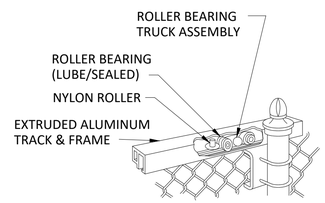

TYPICAL ROLLER TRUCK DETAIL

7 N.T.S.

USE	SIZE	O.D.	SCH. 40	
			WALL THICK	WT./FT.
TOP RAIL/GATES	1-5/8"	1.660"	0.143"	2.27#
LINE POST	2-1/2"	2.375"	0.157"	3.65#
CORNER & TERMINAL	4"	4.000"	0.231"	9.10#
GATE POSTS	8-5/8"	8.625"	0.322"	28.55#

ASTM A 53 SCHEDULE 40
(RAILS, POSTS & GATE FRAMES)

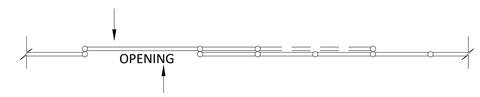

SECTION

8 N.T.S.

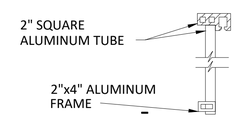

SECTION

9 N.T.S.

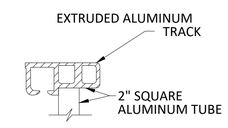

SECTION

10 N.T.S.

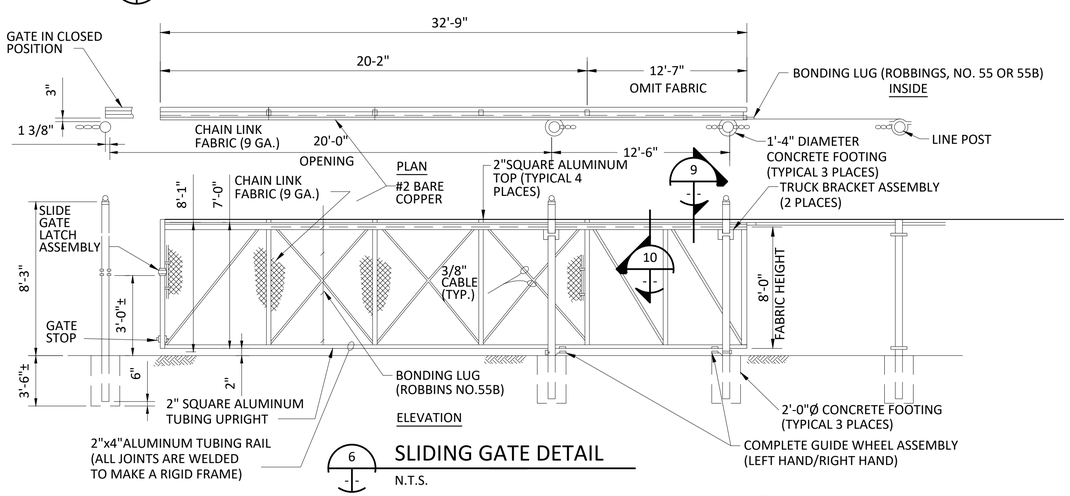

SLIDING GATE DETAIL

6 N.T.S.

FENCE AND GATE DETAILS

315 NOT TO SCALE

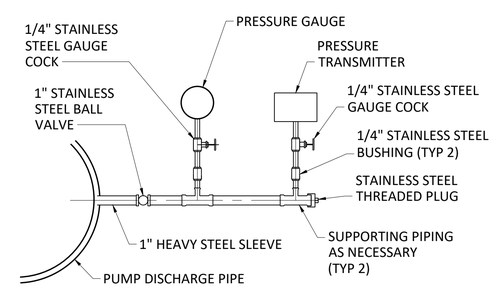

NOTE:

1. LENGTH OF 1" PIPE NIPPLES AS NECESSARY TO PREVENT CONTACT BETWEEN VALVE OPERATING LEVER, PRESSURE GAUGE, PRESSURE TRANSMITTER, OR ADJACENT PIPING.
2. PRESSURE TRANSMITTER CAN BE MOUNTED REMOTE VIA FLEXIBLE TUBING.

PRESSURE GAUGE AND TRANSMITTER DETAIL

316 NOT TO SCALE

GENERAL NOTES:

1. ALL FABRIC TO BE #9 GAGE WIRE, WOVEN IN A 2" MESH. TOP AND BOTTOM EDGES TO BE TWISTED AND BARBED.
2. SINGLE EXTENSION ARMS SHALL POINT OUTWARD AT AN ANGLE OF 45 DEG.
3. PROVIDE 1/8" x 1" FLEXIBLE BRAIDED COPPER STRAP CLAMP CONNECTED TO GATE AND POST.
4. ALL METAL PARTS SHALL BE HOT DIP GALVANIZED AFTER FABRICATION.
5. FENCES AND GATES SHALL BE FURNISHED COMPLETE WITH ALL NECESSARY FITTINGS AND HARDWARE.
6. FOR GATES, SIZES OF PIPE, SAG RODS AND TURNBUCKLES SHALL BE MANUFACTURER'S STANDARD WHICH ALSO MEET THE REQUIREMENTS OF THIS DRAWING.
7. POSTS SHALL BE ROLLED OR EXTRUDED SECTIONS OR TUBING OF STEEL OR ALUMINUM CAPABLE OF WITHSTANDING A LATERAL FORCE OF 100 POUNDS APPLIED AT THE TOP. ALL HOLLOW POSTS SHALL BE CAPPED.
8. STANDARD PIPE SIZES INDICATED ARE NOMINAL DIAMETER, SCHEDULE 40, PER AMERICAN STANDARDS ASSOCIATION (ASA) B 36.10.
9. PROVIDE PLUNGE ROD AND CATCHES FOR ALL GATES IN OPEN AND CLOSED POSITION.

Freese and Nichols, Inc.
Texas Registered Engineering Firm F-2144

STATE OF TEXAS
Samuel Chukwu
118309
LICENSED
PROFESSIONAL ENGINEER
01-19-2022

FREESE AND NICHOLS
10497 Town and Country Way,
Suite 600
Houston, Texas 77024
Phone - (713) 600-6800
Web - www.freese.com

CITY OF BEAUMONT
COLLIER'S FERRY PUMP STATION

MECHANICAL
MECHANICAL DETAILS
SHEET 1 OF 5

F&N JOB NO.	BMT20326
DATE	01/07/2022
DESIGNED	LVR
DRAWN	WFA
REVISED	-
CHECKED	ACH
FILE NAME	M-MECH-DT-1.dwg

NO.	ISSUE	BY	DATE

VERIFY SCALE 0 1
Bar is one inch on original drawing. If not one inch on this sheet, adjust scale.

SHEET M-6
SEQ. 92

ISSUED FOR BID

NOTES:

1. CONTRACTOR SHALL PROVIDE A 3/4 " AND 1 1/2 " THREADED OUTLET WITH CAMLOK QUICK DISCONNECT ADAPTERS AND VALVE ON EACH YARD HYDRANT IN ADDITION TO THE HYDRANT VALVE. YARD HYDRANT SHALL BE JAY R. SMITH MFG. CO. 5913 SERIES, ZURN Z1390 SERIES OR APPROVED EQUAL WITH 1.5" INLET AND 3' BURY.
2. CONTRACTOR SHALL PROVIDE FREEZE PROOF YARD HYDRANT.
3. IF INSTALLED ON MOW STRIP, THE WIDTH OF THE MOW STRIP SHALL BE A MINIMUM OF 24".
4. YARD HYDRANTS LOCATED NEXT TO STRUCTURES SHALL BE SECURELY MOUNTED TO THE STRUCTURES WITH STAINLESS STEEL FASTENERS.
5. THE YARD HYDRANT SHALL BE PROVIDED WITH WHEEL TYPE HANDLE.
6. ALL HOSE STATIONS SHALL BE PROVIDED WITH A 25-FOOT HOSE.
7. PROVIDE CASING GUARD AROUND YARD HYDRANT ABOVE GRADE SURFACE.

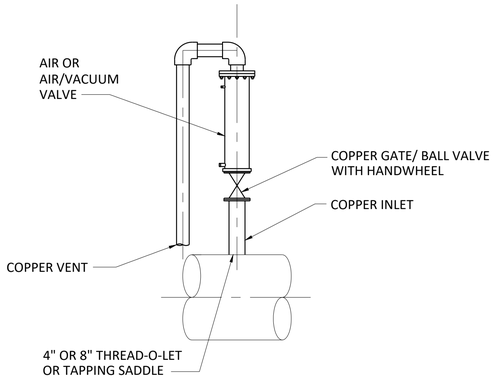

324 / - 4" AND 8" AIR AND VACUUM RELEASE VALVE ASSEMLY W/VENT PIPING

NOT TO SCALE

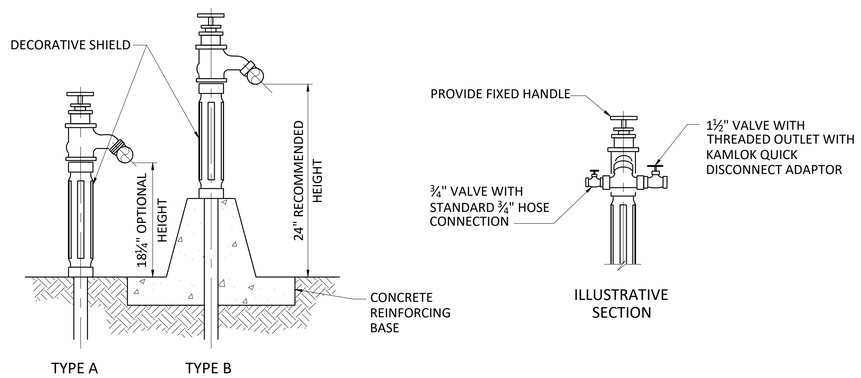

329 / - YARD HYDRANT DETAIL

NOT TO SCALE

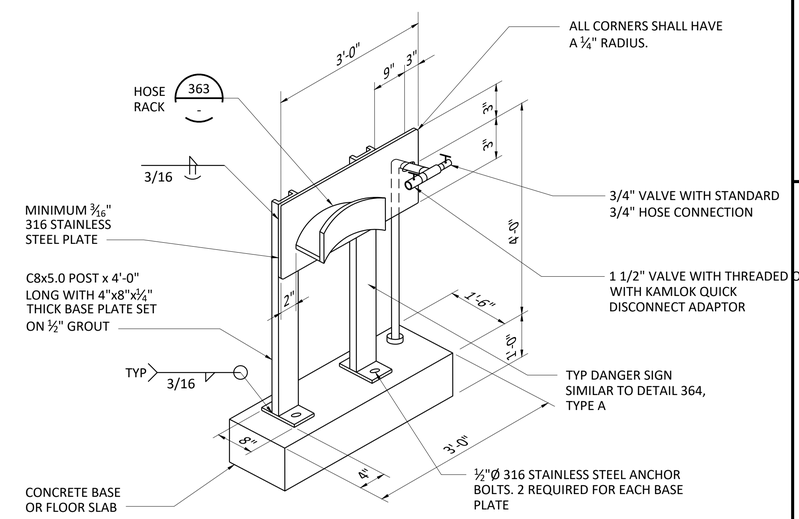

NOTES:

1. ANCHOR BOLTS SHALL BE HOOKED UNDER REINFORCING STEEL OR INTO BASE SLAB.
2. FOR 362 TYPE C UTILITY STATION, PROVIDE 50-FOOT HOSE.
3. COMPLETE ASSEMBLY TO BE 316 STAINLESS STEEL.

362 / TYPE C POST-MOUNTED UTILITY STATION DETAIL

NOT TO SCALE

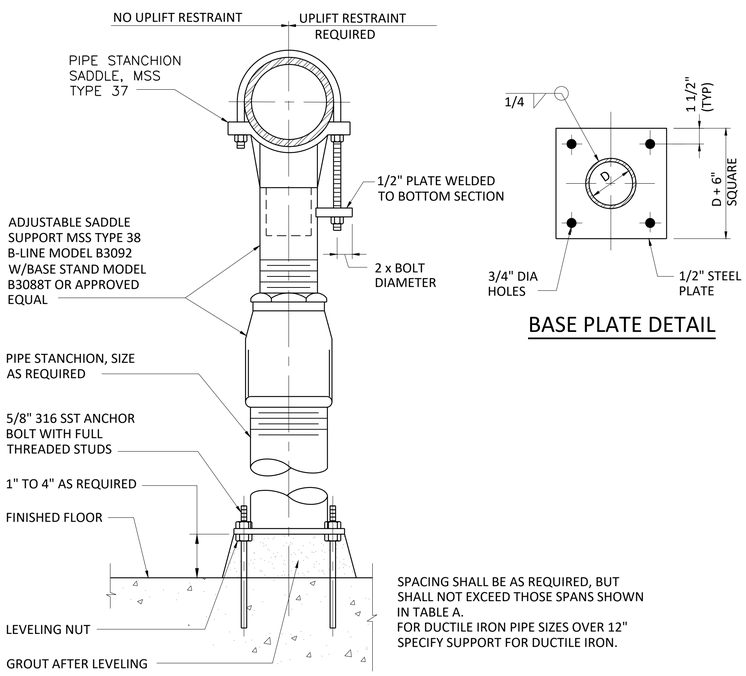

340 / TYPE F PIPE SUPPORT DETAIL

NOT TO SCALE

BASE PLATE DETAIL

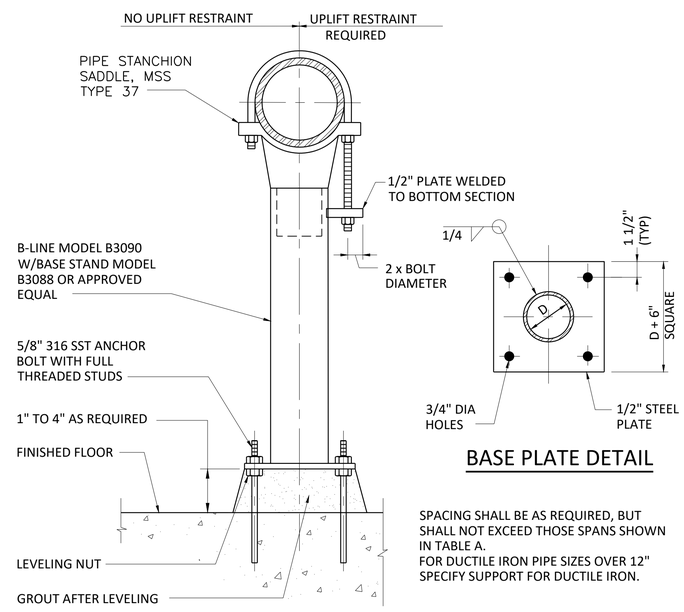

340 / TYPE G PIPE SUPPORT DETAIL

NOT TO SCALE

BASE PLATE DETAIL

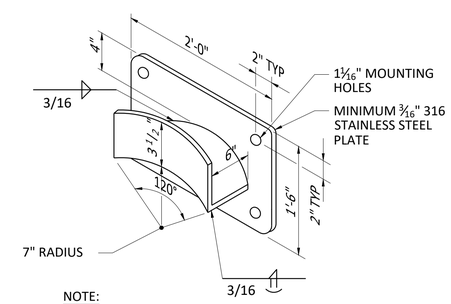

NOTE:
1. ALL CORNERS SHALL HAVE A ¾" RADIUS.

363 / - HOSE RACK

NOT TO SCALE

ISSUED FOR BID

Freese and Nichols, Inc.
Texas Registered Engineering Firm F-2144

FREESE AND NICHOLS
10497 Town and Country Way,
Suite 600
Houston, Texas 77024
Phone - (713) 600-6800
Web - www.freese.com

STATE OF TEXAS
KAMRAN ALIZADEH
118309
LICENSED
PROFESSIONAL ENGINEER
01-19-2022

CITY OF BEAUMONT
COLLIER'S FERRY PUMP STATION
MECHANICAL
MECHANICAL DETAILS
SHEET 2 OF 5

NO.	ISSUE	BY	DATE

F&N JOB NO. BMT20326
DATE 01/07/2022
DESIGNED LVR
DRAWN WFA
REVISED -
CHECKED ACH
FILE NAME M-MECH-DT-1.dwg

VERIFY SCALE 0 1
Bar is one inch on original drawing. If not one inch on this sheet, adjust scale.

SHEET M-7
SEQ. 93

ACAD Rel: 24.0s (LMS Tech)
Filename: N:\WW\Drawings\M-MECH-DT-1.dwg
Last Saved: 1/13/2022 1:00 PM Saved By: 02139
Plot Date: 1/13/2022 2:31 PM Plot By: 02139 Filename: N:\WW\Drawings\M-MECH-DT-1.dwg

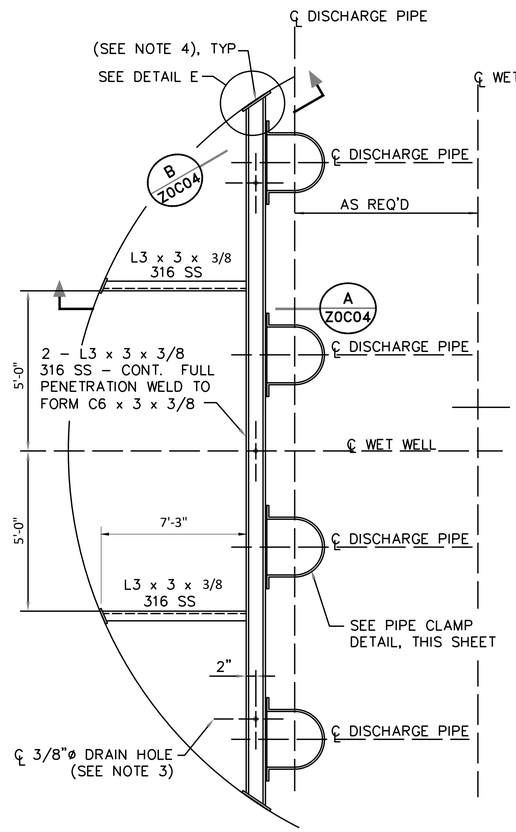

TYP DISCHARGE PIPING SUPPORT
PLAN FOR 4 PUMPS

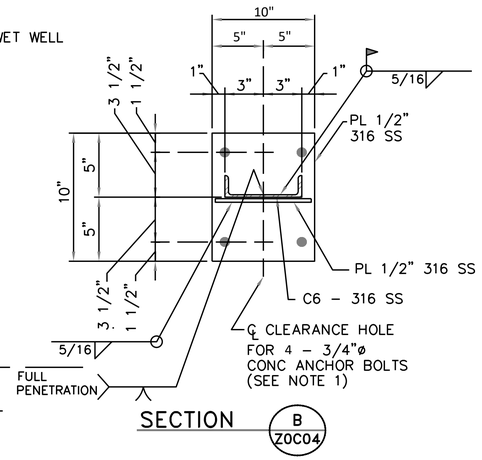

SECTION B Z0C04

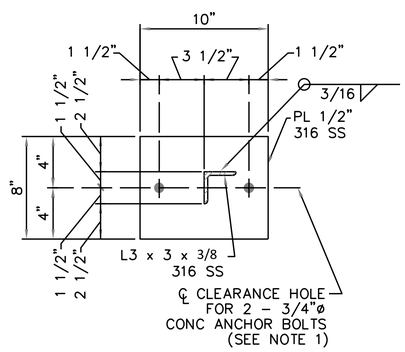

SECTION C Z0C04

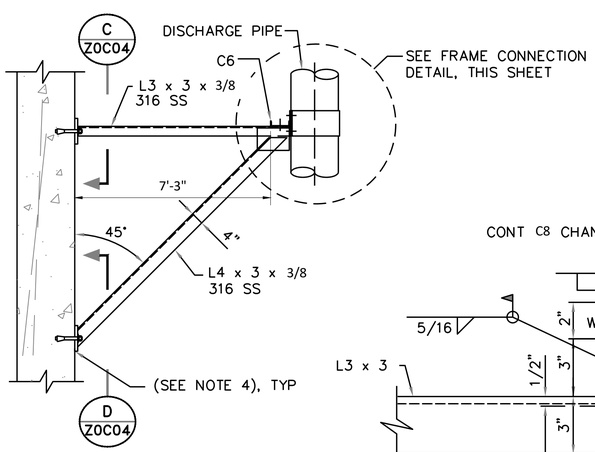

TYP LATERAL PIPE SUPPORT FRAME

SECTION A Z0C04

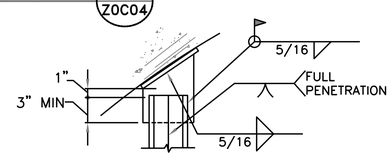

DETAIL E

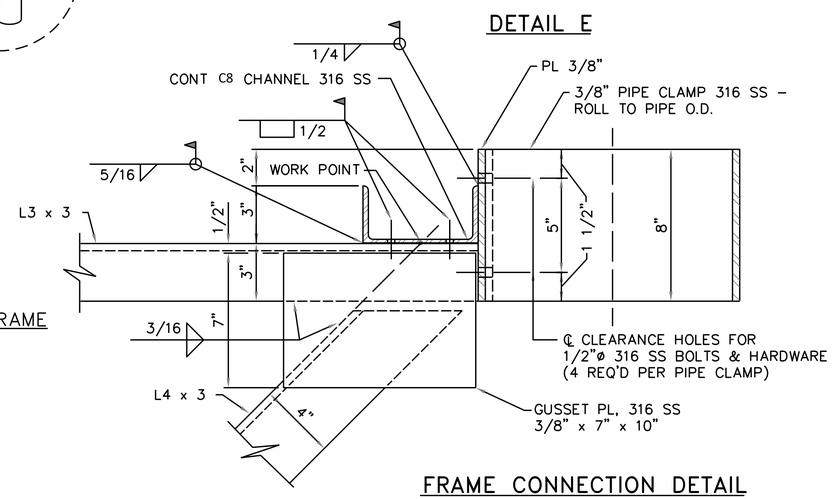

FRAME CONNECTION DETAIL

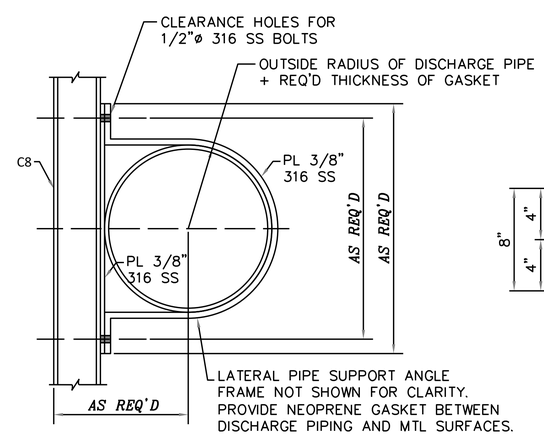

PIPE CLAMP DETAIL

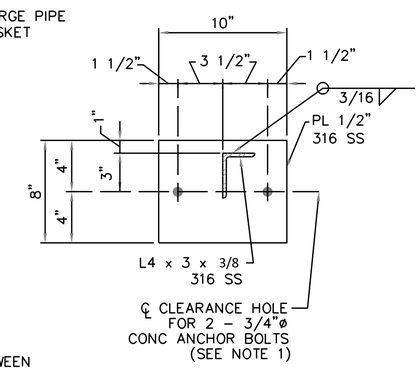

SECTION D Z0C04

NOTES:

1. CONCRETE ANCHOR BOLTS SHALL HAVE 6" MINIMUM EMBEDMENT AND SHALL BE TYPE 316 STAINLESS STEEL, PER SPECIFICATIONS.
2. SEE STATION AND STRUCTURAL DRAWINGS FOR DIMENSIONS AND INFORMATION NOT SHOWN.
3. DRILL 3/8" DIA. HOLES, 1" OFF CENTERLINE OF C6 AT MIDSPAN BETWEEN LATERAL PIPE SUPPORTS TO ALLOW FOR DRAINAGE. 3 HOLES PER CHANNEL WHERE 2 LATERAL SUPPORTS REQUIRED; 2 HOLES PER CHANNEL WHERE 1 LATERAL SUPPORT REQUIRED.
4. SET 1/4" NEOPRENE GASKET ON WALL SURFACE IN SIKA 1A (OR EQUAL) SEALANT.

ISSUED FOR BID

Freese and Nichols, Inc.
Texas Registered Engineering Firm F-2144
STATE OF TEXAS
ANNMARIE CHIUPKI
118309
LICENSED
PROFESSIONAL ENGINEER
01-19-2022
FREESE AND NICHOLS
10497 Town and Country Way,
Suite 600
Houston, Texas 77024
Phone - (713) 600-6800
Web - www.freese.com

CITY OF BEAUMONT
COLLIER'S FERRY PUMP STATION
MECHANICAL
MECHANICAL DETAILS
SHEET 3 OF 5

F&N JOB NO.	BMT20326
DATE	01/07/2022
DESIGNED	LVR
DRAWN	WFA
REVISED	-
CHECKED	ACH
FILE NAME	CV-PS-GUIDE-DT.dwg

NO.	ISSUE	BY	DATE

VERIFY SCALE Bar is one inch on original drawing. If not one inch on this sheet, adjust scale. 0 1

SHEET M-8
SEQ. 94

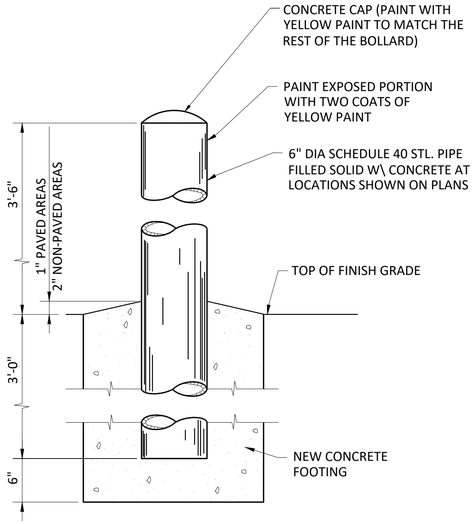

547 TYPE B

TYPICAL GRADE MOUNTED BOLLARD DETAIL

NOT TO SCALE

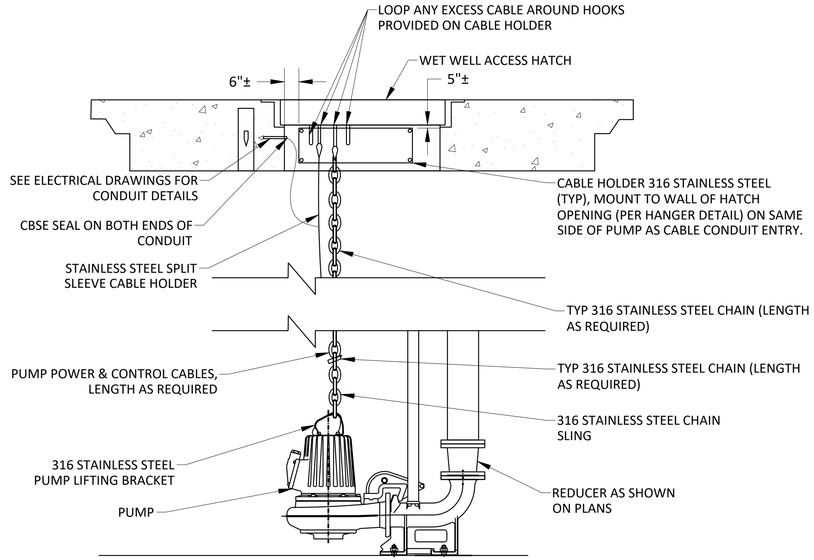

548 -

PUMP LIFTING AND CABLE DETAIL

NOT TO SCALE

NOTES:

1. WARNING SIGN SHALL BE 0.060 INCH FIBERGLASS WITH EMBEDDED FADERPROOF LEGENDS.
2. LETTER HEIGHTS ARE APPROXIMATE.
3. CONTRACTOR SHALL USE 6 HOLES FOR INSTALLING SIGN ON WALLS AND A MINIMUM OF 4 HOLES FOR INSTALLING SIGN ON HANDRAILS.

364 TYPE A

TYPICAL DANGER SIGN

NOT TO SCALE

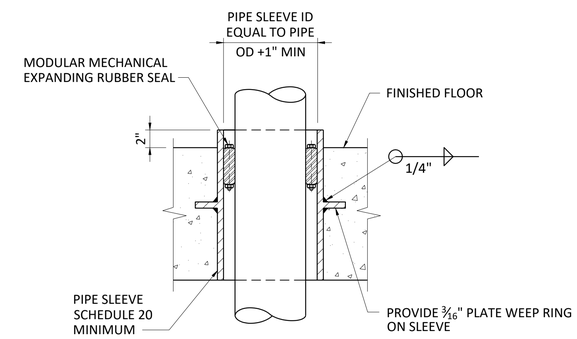

342 TYPE S

FOR FLOORS

PIPE PENETRATION DETAIL

NOT TO SCALE

NOTES:

1. DIMENSIONS SHOWN IN INCHES.
2. ATTACH TO WET WELL FLOOR PER MANUFACTURER'S RECOMMENDATION.

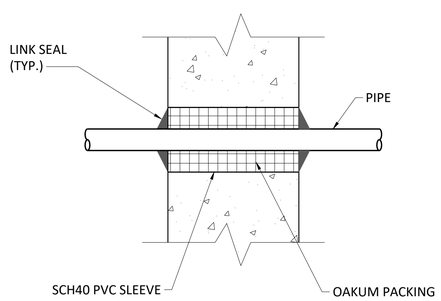

TYPE A

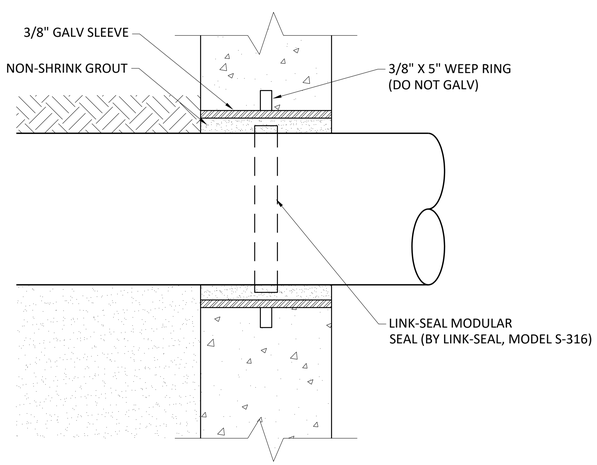

TYPE B

549 -

SLEEVE WET PENETRATION DETAIL

NOT TO SCALE

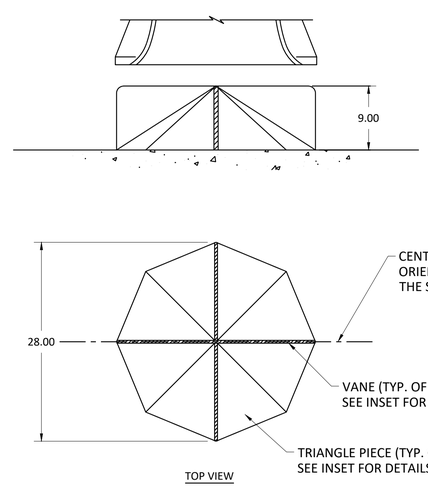

200 -

FLOOR CONE DETAIL

NOT TO SCALE

ISSUED FOR BID

Freese and Nichols, Inc.
Texas Registered Engineering Firm F-2144

01-19-2022

FREESE AND NICHOLS
10497 Town and Country Way, Suite 600
Houston, Texas 77024
Phone - (713) 600-6800
Web - www.freese.com

CITY OF BEAUMONT
COLLIER'S FERRY PUMP STATION

MECHANICAL
MECHANICAL DETAILS
SHEET 4 OF 5

NO.	ISSUE	BY	DATE

F&N JOB NO. BMT20326
DATE 01/07/2022
DESIGNED LVR
DRAWN WFA
REVISED -
CHECKED ACH
FILE NAME M-MECH-DT-1.dwg

VERIFY SCALE 0 1
Bar is one inch on original drawing. If not one inch on this sheet, adjust scale.

SHEET M-9
SEQ. 95

ACAD Rel: 24.0s (LMS Tech)
Filename: N:\WW\Drawings\M-MECH-DT-1.dwg
Last Saved: 1/13/2022 1:00 PM Saved By: 02139

Plot Date: 1/13/2022 2:31 PM Plot By: 02139 Filename: N:\WW\Drawings\M-MECH-DT-1.dwg

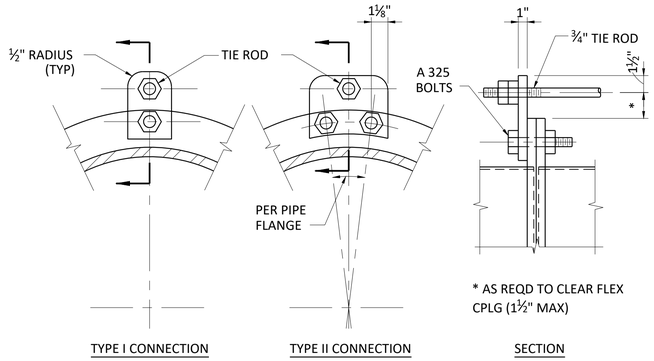

ROD SCHEDULE FOR DIP

PIPE THRUST SEE NOTE #2	TYPE OF CONECTI ON	NO. RODS
0-6,000#	I	2
6,001-12,000#	II	2
12,001-18,000#	II	3
18,001-24,000#	II	4
24,001-30,000#	II	5

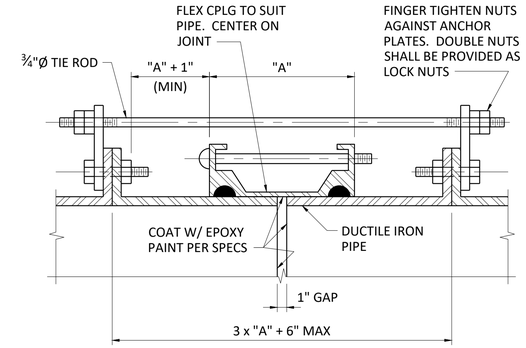

NOTES:

1. ALL EXPOSED FLEXIBLE COUPLINGS SHALL HAVE TIE RODS UNLESS SPECIFICALLY INDICATED OTHERWISE ON THE DRAWINGS.
2. PIPE THRUST SHALL BE BASED ON TEST PRESSURE.
3. PIPE THRUST = 0.7854 x D x TEST PRESSURE (psi), WHERE D IS PIPE OD. IN INCHES.
4. MINIMUM TIE ROD YIELD 48,000 PSI.
5. FOR THRUSTS GREATER THAN 30,000 POUNDS, ADD ONE ¾ INCH DIAMETER ROD FOR EVERY 6,000 PONDS INCREASE IN THRUST.
6. CONTRACTOR MAY USE ONE INCH DIAMETER ROD FOR THRUSTS GREATER THAN 30,000 POUNDS. NUMBER OF ONE INCH RODS = NUMBER OF ¾ INCH RODS X 0.5625. ROUND OFF TO THE NEXT LARGER NUMBER.
7. ALL ROD CONNECTIONS SHALL BE TYPE II FOR THRUSTS GREATER THAN 30,000 POUNDS.
8. GRIND ALL CORNERS SMOOTH.

367 -

FOR DUCTILE IRON PIPE

THRUST HARNESS CONNECTION DETAILS

NOT TO SCALE

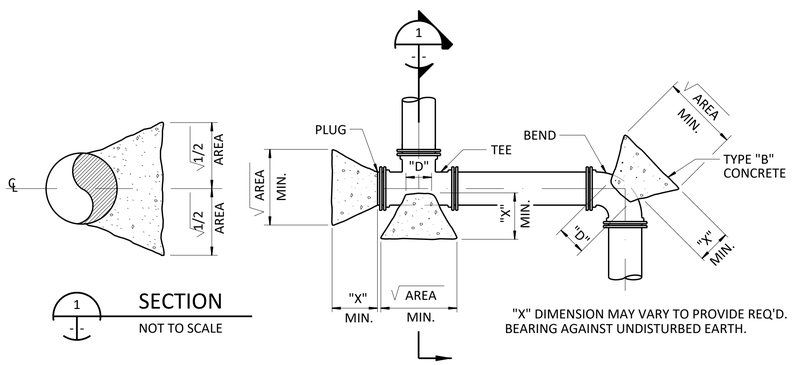

1 - -

SECTION

NOT TO SCALE

"X" DIMENSION MAY VARY TO PROVIDE REQ'D. BEARING AGAINST UNDISTURBED EARTH.

NOTES:

1. THRUST BLOCK AREAS SHOWN ARE BASED ON TEST PRESSURES OF 100 P.S.I.G. FOR PLANT WATER, ETC., 50 P.S.I.G. FOR PROCESS LINES AND 25 P.S.I.G. FOR GRAVITY LINE AND 200 P.S.F. PER VERTICAL FOOT OF SOIL COVER MEASURED TO CENTERLINE OF PIPE.
2. MINIMUM AREAS SHOWN ARE IN SQUARE FEET AND ARE BASED UPON MIN. 4.0 FEET OF COVER.
3. BEARING MUST BE ON UNDISTURBED EARTH.
4. ADJUST THRUST BLOCK AREAS ACCORDINGLY IF PRESSURES, DEPTH OF COVER AND/OR SOIL BEARING VALUE VARIES.

HORIZONTAL BLOCKING TABLE

PLANT WATER, FIRE WATER & POTABLE WATER SYSTEMS WORKING PRESSURES OF 50 PSIG TO 100 PSIG

PIPE SIZE	"X"-DIM. FT.	5°-10' MIN. AREA	11°-15' MIN. AREA	22°-30' MIN. AREA	45° MIN. AREA	90° MIN. AREA	TEE & PLUG MIN. AREA
2"-4"	0.75	0.13	0.30	0.59	1.15	2.13	1.51
6"	1.00	.029	0.65	1.30	2.55	4.70	3.33
8"	1.00	0.51	1.14	2.26	4.44	8.20	5.80
10"	1.00	0.78	1.74	3.47	6.81	12.57	8.89
12"	1.25	1.10	2.46	4.90	9.62	17.77	12.57
16"	1.50	1.88	4.22	8.41	16.49	30.47	21.54
24"	2.00	3.95	8.87	17.65	34.62	63.98	45.24
30"	2.25	5.87	13.20	26.27	51.52	95.20	67.32
36"	2.75	8.07	18.14	36.11	70.82	130.86	92.53
42"	3.50	10.51	23.62	47.01	92.21	170.37	120.47
48"	4.00	13.16	29.56	58.84	115.41	213.26	150.80
54"	4.50	15.98	35.92	71.49	140.23	259.11	183.22
60"	5.00	18.97	42.64	84.86	166.46	307.58	217.49
72"	5.50	25.37	57.01	113.47	222.59	411.28	290.82
84"	6.00	32.23	72.43	144.15	282.77	522.48	369.45
96"	7.00	39.47	88.68	176.51	346.24	639.78	452.39

MEDIUM PRESSURE LINES; PROCESS LINES, PUMP DISCHARGE LINES, ETC. WORKING PRESSURES OF 25 PSIG TO 50 PSIG

PIPE SIZE	"X"-DIM. FT.	5°-10' MIN. AREA	11°-15' MIN. AREA	22°-30' MIN. AREA	45° MIN. AREA	90° MIN. AREA	TEE & PLUG MIN. AREA
2"-4"	0.75	0.07	0.15	0.29	0.58	1.07	0.75
6"	1.00	0.15	0.33	0.65	1.27	2.35	1.66
8"	1.00	0.25	0.57	1.31	2.22	4.10	2.90
10"	1.00	0.39	0.87	1.73	3.40	6.29	4.45
12"	1.25	0.55	1.23	2.45	4.81	8.89	6.28
16"	1.50	0.94	2.11	4.20	8.24	15.23	10.77
24"	2.00	1.97	4.43	8.83	17.31	31.99	22.62
30"	2.25	2.94	6.60	13.13	25.76	47.60	33.66
36"	2.75	4.04	9.07	18.05	35.41	65.43	46.27
42"	3.50	5.25	11.81	23.50	46.10	85.19	60.24
48"	4.00	6.58	14.78	29.42	57.71	106.63	75.40
54"	4.50	7.99	17.96	35.74	70.11	129.55	91.61
60"	5.00	9.49	21.32	42.43	83.23	153.79	108.75
72"	5.50	12.69	28.51	56.74	111.29	205.64	145.41
84"	6.00	16.12	36.21	72.08	141.38	261.24	184.73
96"	7.00	19.73	44.34	88.26	173.12	319.89	226.19

LOW PRESSURE LINES; GRAVITY LINES, DRAINS, ETC., (WITH STATIC HEAD ONLY) WORKING PRESSURES OF 5 PSIG TO 25 PSIG

PIPE SIZE	"X"-DIM. FT.	5°-10' MIN. AREA	11°-15' MIN. AREA	22°-30' MIN. AREA	45° MIN. AREA	90° MIN. AREA	TEE & PLUG MIN. AREA
2"-4"	0.75	0.03	0.07	0.15	0.29	0.53	0.38
6"	1.00	0.07	0.16	0.32	0.64	1.18	0.83
8"	1.00	0.13	0.28	0.57	1.11	2.05	1.45
10"	1.00	0.19	0.44	0.87	1.70	3.14	2.22
12"	1.25	0.27	0.62	1.23	2.40	4.44	3.14
16"	1.50	0.47	1.06	2.10	4.12	7.62	5.39
24"	2.00	0.99	2.22	4.41	8.66	15.99	11.31
30"	2.25	1.47	3.30	6.57	12.88	23.80	16.83
36"	2.75	2.02	4.53	9.03	17.71	32.72	23.13
42"	3.50	2.63	5.90	11.75	23.05	42.59	30.12
48"	4.00	3.29	7.39	14.71	28.85	53.31	37.70
54"	4.50	4.00	8.98	17.87	35.06	64.78	45.80
60"	5.00	4.74	10.66	21.22	41.62	76.90	54.37
72"	5.50	6.34	14.25	28.37	55.65	102.82	72.71
84"	6.00	8.06	18.11	36.04	70.69	130.62	92.36
96"	7.00	9.87	22.17	44.13	86.56	159.94	113.10

368 -

THRUST BLOCKING DETAIL

NOT TO SCALE

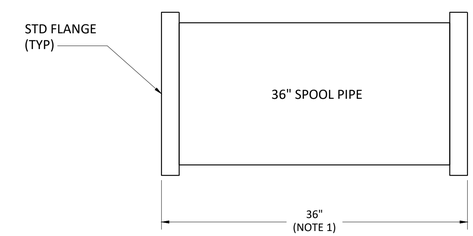

NOTES:

1. LENGTH OF SPOOL PIPE FROM OUTSIDE FLANGE TO OUTSIDE FLANGE TO BE EXACT SAME LAY LENGTH OF 36" FLOW METER. COORDINATE ACTUAL LENGTH WITH FLOW METER MANUFACTURER.
2. SPOOL PIPE TO BE PERMANENTLY STORED IN THE ELECTRICAL BUILDING AT COLLIER'S FERRY PUMP STATION.

4 -

SPOOL PIPE FOR FLOW METER REPLACEMENT

NOT TO SCALE

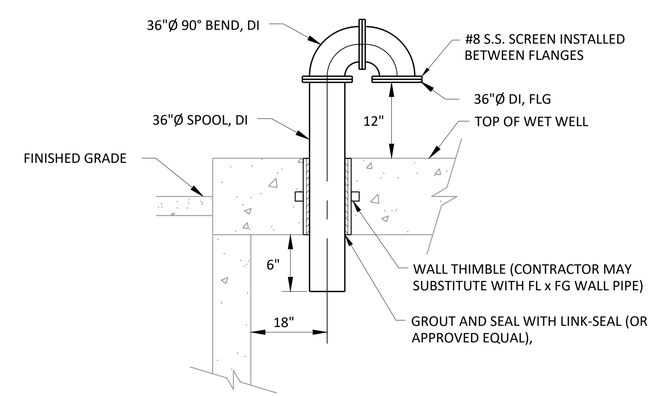

5 -

36" GOOSENECK FOR WET WELL

NOT TO SCALE

ISSUED FOR BID

Freese and Nichols, Inc.
Texas Registered Engineering Firm F-2144

FREESE AND NICHOLS
10497 Town and Country Way, Suite 600
Houston, Texas 77024
Phone - (713) 600-6800
Web - www.freese.com

01-19-2022

CITY OF BEAUMONT
COLLIER'S FERRY PUMP STATION

MECHANICAL
MECHANICAL DETAILS
SHEET 5 OF 5

NO.	ISSUE	BY	DATE

F&N JOB NO. BMT20326
DATE 01/07/2022
DESIGNED LVR
DRAWN WFA
REVISED -
CHECKED ACH
FILE NAME M-MECH-DT-1.dwg

VERIFY SCALE 0 1 Bar is one inch on original drawing. If not one inch on this sheet, adjust scale.

SHEET M-10
SEQ. 96

ACAD Rel: 24.0s (LMS Tech)
Filename: N:\WW\Drawings\M-MECH-DT-1.dwg
Last Saved: 1/13/2022 1:00 PM Saved By: 02139

Plot Date: 1/13/2022 2:32 PM Plot By: 02139 Filename: N:\WW\Drawings\M-MECH-DT-1.dwg

GENERAL NOTES:

1. DESIGN IS IN ACCORDANCE WITH 2015 INTERNATIONAL BUILDING CODE, LOCAL AMENDMENTS, AND APPLICABLE CODE REFERENCED STANDARDS.

2. CONSTRUCTION ACTIVITIES SHALL BE IN ACCORDANCE WITH APPLICABLE OSHA, STATE, AND LOCAL REGULATIONS. THIS DESIGN IS NOT INTENDED TO CONFLICT WITH SAFETY OR APPLICABLE REGULATIONS OR TO RELIEVE THE CONTRACTOR OF COMPLIANCE WITH THESE REQUIREMENTS. IN CASE OF CONFLICT WITH SAFETY OR APPLICABLE REGULATIONS, CONTACT THE ENGINEER FOR GUIDANCE BEFORE PROCEEDING WITH FABRICATION OR CONSTRUCTION.

3. PRIOR TO FABRICATION OR CONSTRUCTION:
   A. VERIFY DIMENSIONS AND LOCATIONS OF ALL OPENINGS, DEPRESSIONS, OFFSETS, SLEEVES, CURBS, PADS, INSERTS, EQUIPMENT REQUIREMENTS, ETCETERA.
   B. REVIEW OTHER DISCIPLINE DRAWINGS FOR SIZE AND LOCATION OF ALL OPENINGS, DEPRESSIONS, OFFSETS, SLEEVES, CURBS, PADS, INSERTS, EQUIPMENT REQUIREMENTS, ETCETERA, WHICH ARE NOT SHOWN ON STRUCTURAL DRAWINGS.
   C. FIELD VERIFY ALL EXISTING CONDITIONS, INCLUDING LOCATION AND DIMENSIONS OF ALL EXISTING CONSTRUCTION AND UTILITIES.
   D. NOTIFY OWNERS REPRESENTATIVE OF ANY DISCREPANCIES BETWEEN DISCIPLINES, CONSTRUCTABILITY ISSUES, OR EXISTING CONDITIONS.

4. REMOVE ALL ABANDONED FOUNDATIONS, UTILITIES, PIPELINES, ETCETERA THAT INTERFERE WITH NEW CONSTRUCTION.

5. PROVIDE EXCAVATION SHORING TO PROTECT AND SUPPORT FOUNDATION SOILS UNDER EXISTING STRUCTURES.

6. THE STRUCTURES ARE DESIGNED FOR STABILITY IN THE FINAL CONDITION ONLY. PROVIDE TEMPORARY BRACING AND SHORING AS REQUIRED FOR STABILITY DURING CONSTRUCTION.

7. PLANS, SECTIONS, AND DETAILS ARE NOT TO BE SCALED FOR DETERMINATION OF QUANTITIES, LENGTHS, OR FIT OF MATERIALS.

8. THE GENERAL NOTES AND TYPICAL DETAILS ARE GENERAL AND APPLY TO THE ENTIRE PROJECT EXCEPT WHERE THERE ARE SPECIFIC INDICATIONS TO THE CONTRARY.

LOADS

1. DEAD LOADS: ACTUAL WEIGHTS OF ALL CONSTRUCTION MATERIALS AND FIXED SERVICE EQUIPMENT. SUPERIMPOSED DEAD LOADS (NOT INCLUDING STRUCTURAL FRAMING SELF-WEIGHT):
   A. ELECTRICAL BUILDING ROOF COLLATERAL LOAD: 10 PSF

2. FLOOR LIVE LOADS:
   A. PUMP STATION WET WELL TOP SLAB, GENERATOR SLAB: 250 PSF
   B. ELECTRICAL BUILDING FLOOR: 150 PSF (300 PSF AT EQUIPMENT)
   C. PLATFORMS: 60 PSF
   D. GRATING: SAME AS SURROUNDING AREA BUT NOT LESS THAN 60 PSF. IF SUBJECTED TO VEHICULAR TRAFFIC, LIVE LOAD SHALL CORRESPOND TO AASHTO HS-20 WHEEL LOAD.

3. ROOF LIVE LOAD:
   A. ELECTRICAL BUILDING ROOF: 20 PSF

4. GROUND SNOW LOAD: Pg = 5 PSF

5. LATERAL LOADS:
   A. RISK CATEGORY III
   B. WIND LOAD:
      i. BASIC WIND SPEED: V = 142 MPH
      ii. WIND EXPOSURE: C
      iii. INTERNAL PRESSURE COEFFICIENT: GCpi = +/-0.18
      iv. COMPONENTS AND CLADDING PRESSURES, FOR VARIOUS ZONES USING AN EFFECTIVE WIND AREA OF 10 FT^2 ARE AS FOLLOWS:

LRFD DESIGN WIND PRESSURE FOR COMPONENTS AND CLADDING PRESSURES HAVE BEEN MULTIPLIED BY A 1.0 LOAD FACTOR (PSF)				
ZONE	PRESSURE		ZONE	PRESSURE
1	+16/-48		4	+37/-41
2	+16/-53		5	+37/-48
3	+16/-62			

   C. SEISMIC LOAD:
      i. SEISMIC IMPORTANCE FACTOR: I = 1.25
      ii. MAPPED SPECTRAL ACCELERATIONS: $S_S = 0.084$, $S_1 = 0.045$
      iii. SITE CLASS: D
      iv. SPECTRAL RESPONSE COEFFICIENT: $S_{DS} = 0.09$, $S_{D1} = 0.072$
      v. SEISMIC DESIGN CATEGORY: B

FOUNDATION

1. FOUNDATIONS HAVE BEEN DESIGNED IN ACCORDANCE WITH THE GEOTECHNICAL REPORT, "GEOTECHNICAL REPORT, COLLIERS RAW WATER PUMP STATION AND TUNNEL, PREPARED FOR CITY OF BEAUMONT, TEXAS, DATED JUNE 24, 2021, PREPARED BY FREESE AND NICHOLS, INC.

2. EXCAVATION DESIGN AND SAFETY IS THE RESPONSIBILITY OF THE CONTRACTOR. ANY SLOPES SHOWN ARE A MAXIMUM AND SHALL BE DECREASED AS REQUIRED FOR SAFETY OR TO MEET OSHA REQUIREMENTS.

3. AT THE LOCATIONS WHERE UTILITY TRENCHES CROSS THE BUILDING LINE, 5'-0" OF EACH TRENCH CENTERED ON THE BUILDING LINE SHALL BE BACKFILLED AS FOLLOWS: OUTSIDE THE BUILDING LINE BACKFILL ABOVE THE UTILITY WITH A COMPACTED, LOW-PERMEABILITY CLAY; INSIDE THE BUILDING LINE BACKFILL ABOVE THE UTILITY WITH SPECIFIED SELECT FILL; EMBEDMENT MATERIAL BELOW AND AROUND THE UTILITY SHALL BE FLOWABLE FILL.

4. EXCAVATION AND SUBGRADE PREPARATION
   A. REMOVE THE SURFICIAL VEGETATION, WASTE AND LOOSE SOILS TO A MINIMUM DEPTH OF 6"
   B. EXCAVATE THE SITE TO THE PROPOSED FINISHED SUBGRADE WHERE CUTTING TO SUBGRADE IS REQUIRED. UNLESS NOTED OTHERWISE, EXTEND THE LATERAL LIMITS OF THE EXCAVATION 5'-0" BEYOND THE PERIMETER OF THE FOUNDATION.
   C. PROOF ROLL THE EXPOSED SUBGRADE IN ACCORDANCE WITH TXDOT ITEM 216. SOFT OR PUMPING SUBGRADE AREAS SHALL BE EXCAVATED IN BOTH HORIZONTAL AND VERTICAL DIRECTIONS EXPOSING COMPETENT SUBGRADE. GRADE SHALL BE RESTORED WITH COMPACTED SELECT FILL.
   D. SCARIFY THE EXPOSED SUBGRADE TO A DEPTH OF 6", ADJUST THE MOISTURE CONTENT AS NECESSARY AND MAINTAIN IT TO WITHIN 2 PERCENT OF OPTIMUM AND RECOMPACT THE SOIL TO A MINIMUM OF 95 PERCENT OF THE MAXIMUM DRY DENSITY AS DETERMINED BY ASTM D698 (STANDARD PROCTOR).
   E. BACKFILL MATERIAL:
      i. SELECT FILL: CLASS 4 EARTH FILL AS SPECIFIED IN 31 05 13 "SOILS FOR EARTHWORK." COMPACT TO A MINIMUM OF 95 PERCENT TO A MAXIMUM OF 100 PERCENT OF THE MAXIMUM DRY DENSITY AS DETERMINED BY ASTM D698 (STANDARD PROCTOR), AND AT A MOISTURE CONTENT WITHIN 2 PERCENT BELOW TO 3 PERCENT ABOVE THE OPTIMUM MOISTURE CONTENT.
      ii. STRUCTURAL FILL: CRUSH LIMESTONE BASE MATERIAL, TXDOT STANDARD SPECIFICATION, ITEM 247, GRADE 1 OR 2, TYPE A. COMPACT TO A MINIMUM OF 100 PERCENT OF THE MAXIMUM DRY DENSITY AS DETERMINED BY TEX-113-E, AND AT A MOISTURE CONTENT WITHIN 2 PERCENT BELOW TO 1 PERCENT ABOVE THE OPTIMUM MOISTURE CONTENT.
      iii. CLAY CAP: CLASS 2 EARTH FILL AS SPECIFIED IN 31 05 13 "SOILS FOR EARTHWORK." COMPACT TO A MINIMUM OF 95 PERCENT OF THE MAXIMUM DRY DENSITY AS DETERMINED BY ASTM D698 (STANDARD PROCTOR), AND AT A MOISTURE CONTENT WITHIN OPTIMUM AND 5 PERCENT ABOVE THE OPTIMUM MOISTURE CONTENT.
      iv. FLOWABLE FILL: AS SPECIFIED IN 31 23 23.34 "FLOWABLE FILL." AROUND STRUCTURES, PLACE FLOWABLE FILL IN LIFTS. THE LIFT DEPTH SHALL NOT EXCEED 3'-0".
      v. LEAN CONCRETE: AS SPECIFIED IN 03 30 00 "CAST-IN-PLACE CONCRETE."
   F. BACKFILL SHALL BE PLACED IN MAXIMUM 8" LOOSE LIFTS FOR HEAVY EQUIPMENT AND 4" LOOSE LIFTS FOR HAND-DIRECTED EQUIPMENT.
   G. IN-PLACE FIELD DENSITY TESTS SHALL BE CONDUCTED AT A RATE OF ONE TEST PER 3,000 SQUARE FEET FOR EVERY LIFT.
   H. THE SUBGRADE MOISTURE CONTENT AND DENSITY SHALL BE MAINTAINED DURING CONSTRUCTION.

5. ALL BELOW GRADE FOUNDATION ELEMENTS ARE DESIGNED WITH FORMED SIDES. ALL CONCRETE EXPOSED TO VIEW IN THE FINAL CONDITION SHALL BE FORMED.

7. DO NOT BACKFILL FOUNDATION WALLS UNTIL THE RESTRAINING SLABS OR ADEQUATE BRACING ARE IN PLACE.

8. EXTERIOR SLABS SHALL SLOPE AWAY FROM THE STRUCTURES A MINIMUM OF 1/4" PER FOOT UNLESS OTHERWISE NOTED. GRADING AROUND STRUCTURES SHALL BE SLOPED TO DRAIN ALL WATER AWAY FROM STRUCTURES.

9. ALLOWABLE NET BEARING PRESSURES USED FOR FOUNDATION DESIGNS ARE AS FOLLOWS:
   A. RAW WATER PUMP STATION: 3,500 PSF
   B. ELECTRICAL BUILDING, GENERATOR PAD, ANCILLARY STRUCTURES: 1,800 PSF

10. ALL FOUNDATIONS SHALL BEAR ON SOUND, UNDISTURBED, LEVEL EXCAVATIONS. REMOVE ANY AND ALL LOOSE DEBRIS FROM EXPOSED BEARING SURFACE. SUITABLE BEARING MATERIAL SHALL BE VERIFIED BY A GEOTECHNICAL PROFESSIONAL ENGINEER

11. MUD SLABS, WHERE INDICATED, SHALL BE PLACED AS INDICATED IN DRAWINGS. THE GEOTECHNICAL ENGINEER SHALL VERIFY THAT THE BEARING SURFACE IS FREE OF LOOSE AND/OR DELETERIOUS MATERIAL BEFORE PLACEMENT OF MUD SLAB.

12. WORKING PLATFORM: 12" OF COMPACTED CLEAN CRUSHED STONE (ASTM C33 NO. 57 COARSE AGGREGATE) OVER NON-WOVEN GEOTEXTILE (MIRAFI 1100N OR APPROVED EQUAL). LAP SEGMENTS A MINIMUM OF 3'-0" BUT NOT LESS THAN THAT REQUIRED BY THE MANUFACTURER. EXTEND GEOTEXTILE BEYOND LIMITS OF CRUSHED STONE AS REQUIRED TO ENCLOSE ENDS OF CRUSHED STONE AND TOP WHERE EXPOSED. EXTEND GEOTEXTILE AN ADDITIONAL 12" TO RETURN/LAP UNDER CONCRETE SLAB.

13. PLACEMENT OF WORK PLATFORM SHALL BE WITHIN 24 HOURS OF FINAL EXCAVATION.

14. WHERE CLAYEY OR SANDY SUBGRADE IS SATURATED:
   A. EXCAVATE AS REQUIRED TO WITHIN 3 FEET OF FINAL SUBGRADE SURFACE.
   B. NO EQUIPMENT TRAFFIC IS PERMITTED ON GROUND SURFACE WITHIN 3 FEET OF FINAL SUBGRADE. DO NOT RUT OR REMOLD FINAL SUBGRADE SURFACE.
   C. PERFORM FINAL EXCAVATION WITH SMOOTH EDGE BUCKET.
   D. HAND PLACE GEOTEXTILE TO CREATE A SMOOTH, WRINKLE FREE INSTALLATION. INSTALL PER MANUFACTURER'S INSTRUCTIONS.
   E. PLACEMENT OF SPECIFIED, COMPACTED CRUSHED STONE ON GEOTEXTILE SHALL BE COMPLETED PRIOR TO OPERATING EQUIPMENT OVER GEOTEXTILE. A MINIMUM OF 12" FOR LIGHT EQUIPMENT, 18" FOR HEAVY EQUIPMENT.

CONCRETE

1. CONCRETE SHALL HAVE A MINIMUM 28-DAY COMPRESSIVE STRENGTH OF 4500 PSI UNLESS SPECIFIED OTHERWISE. FOLLOWS:

2. ALL REINFORCING SHALL BE IN ACCORDANCE WITH ASTM A615, GRADE 60, DEFORMED.

3. CONCRETE CLEAR COVER OVER REINFORCING SHALL BE AS LISTED BELOW, UNLESS OTHERWISE NOTED.
   A. CAST AGAINST AND PERMANENTLY EXPOSED TO EARTH: 3"
   B. ALL OTHER: 2"
   C. SEE DRAWINGS FOR EXCEPTIONS

4. ALL EXPOSED EDGES OF CONCRETE SHALL BE CHAMFERED 3/4" INSIDE FORMS OR TOOLED TO 3/4" RADIUS ON SLABS UNLESS NOTED OTHERWISE.

5. SLABS ON GRADE SHALL HAVE CONTROL JOINTS LOCATED AS SHOWN ON THE PLANS OR AT 15'-0" MAXIMUM SPACING. DO NOT PROVIDE CONTROL JOINTS IN STRUCTURAL SLABS.

6. ADDITIONAL CONSTRUCTION JOINTS SHALL HAVE PRIOR APPROVAL OF THE ENGINEER.

7. PENETRATIONS OTHER THAN SHOWN SHALL NOT BE ALLOWED WITHOUT PRIOR APPROVAL FROM THE ENGINEER.

8. IN CASES WHERE REINFORCING BARS CANNOT BE EXTENDED AS FAR AS REQUIRED DUE TO THE LIMITED EXTENT OF THE ADJACENT CONCRETE STRUCTURE, THE BARS SHALL EXTEND AS FAR AS POSSIBLE AND END IN STANDARD HOOKS.

9. THE CONTRACTOR SHALL BE RESPONSIBLE FOR THE DESIGN OF ALL FORMING, TEMPORARY BRACING AND SHORING.

10. CONDUITS AND PIPING EMBEDDED IN CONCRETE SHALL BE SPACED A MINIMUM OF FOUR DIAMETERS AND THE OUTSIDE DIAMETER SHALL BE LESS THAN 30% OF THE MEMBER THICKNESS PLACED BETWEEN LAYERS OF REINFORCING.

11. UNLESS NOTED OTHERWISE, HOOKS SHOWN ON DRAWINGS SHALL BE ASSUMED TO BE STANDARD HOOKS PER ACI 318.

12. UNLESS INDICATED OTHERWISE, LAP SPLICES IN WALLS SHALL BE STAGGERED.

13. ALL REINFORCING SHALL BE CONTINUOUS. CONTINUOUS BARS SHALL LAP 48 BAR DIAMETERS OF SMALLER BAR LAPPED, UNLESS NOTED OTHERWISE. ALL REBAR EMBEDMENT LENGTHS SHALL BE 36 BAR DIAMETERS, UNLESS NOTED OTHERWISE.

ISSUED FOR BID

Freese and Nichols, Inc.
Texas Registered Engineering Firm F- 2144

STATE OF TEXAS
MICHAEL RAY ROBERTSON
59701
REGISTERED PROFESSIONAL ENGINEER
01/14/2022

FREESE AND NICHOLS
10497 Town and Country Way,
Suite 500
Houston, TX 77024
Phone - (713) 600-6800
Web - www.freese.com

City of Beaumont
COLLIERS RAW WATER PUMP STATION

STRUCTURAL

GENERAL NOTES I

F&N JOB NO.	BMT20326
DATE	01/07/2022
DESIGNED	MRR
DRAWN	JAW
REVISED	
CHECKED	PAB
FILE NAME	ST-BMT20326-PST-R21.rvt

NO.	ISSUE	BY	DATE

VERIFY SCALE 0 1
Bar is one inch on original drawing. If not one inch on this sheet, adjust scale.

SHEET S-1
SEQ. 97

Plot Date: 1/13/2022 9:00:58 AM

POST-INSTALLED ANCHORS (EXPANSION OR ADHESIVE)

1. INSTALL IN ACCORDANCE WITH MANUFACTURER'S PRINTED INSTALLATION INSTRUCTIONS (MPII), BUT NOT LESS THAN THAT INDICATED BELOW.

2. ADHESIVE ANCHORS SHALL ONLY BE INSTALLED BY CONSTRUCTION PERSONNEL CERTIFIED UNDER ACI/CRSI ADHESIVE ANCHOR INSTALLER CERTIFICATION PROGRAM OR APPROVED EQUAL. SUBMIT CERTIFICATIONS AS RECORD DATA.

3. ANCHOR DIAMETER AND EMBEDMENT SHALL BE AS INDICATED.

4. HOLES SHALL BE DRILLED USING ROTARY HAMMER DRILLS WITH ANSI MATCHED TOLERANCE CARBIDE-TIPPED DRILL BITS. DRILL BIT DIAMETER SHALL MATCH DIAMETER RECOMMENDED BY MANUFACTURER. DRILL HOLES USING HILTI SAFESET TECHNOLOGY OR APPROVED EQUAL.

5. USE CARE AND CAUTION WHEN INSTALLING TO AVOID CUTTING OR DAMAGING EXISTING REINFORCING STEEL. FIELD VERIFY EXISTING REINFORCING LOCATIONS PRIOR TO FABRICATION OR CONSTRUCTION, AND THEN COORDINATE REBAR LOCATIONS WITH SHOP DRAWINGS.

6. EXPANSION ANCHORS SHALL BE A STUD BOLT TYPE WITH HEX HEAD NUT AND SHALL BE STAINLESS STEEL UNLESS NOTED OTHERWISE, AND AS NOTED BELOW:
   A. ANCHORS SHALL BE HILTI KWIK BOLT TZ, OR AN APPROVED EQUAL. SUBMIT PUBLISHED COMPARISONS BETWEEN EACH SPECIFIED AND EACH ALTERNATE ANCHOR.
   B. VERIFY HOLE IS CLEAR OF DUST AND DEBRIS.
   C. DRIVE ANCHOR INTO HOLE WITH A HAMMER AND THEN TIGHTEN TO SPECIFIED TORQUE.

8. ADHESIVE ANCHORS SHALL BE DEFORMED REINFORCING BARS. ASTM A615, GR 60, OR STAINLESS STEEL 316 THREADED ROD, UNLESS NOTED OTHERWISE, AND AS NOTED BELOW:
   A. ADHESIVE SHALL BE HILTI HIT-RE 500 V3 OR AN APPROVED EQUAL. SUBMIT PUBLISHED COMPARISONS BETWEEN EACH SPECIFIED AND EACH ALTERNATE ANCHOR.
   B. PRIOR TO INSTALLATION: ALL DEFORMED BARS AND THREADED ROD SHALL BE CLEAN, FREE OF OIL, GREASE, OR OTHER RESIDUE, IN ACCORDANCE WITH MPII.
   C. VERIFY HOLE IS CLEAR OF DUST AND DEBRIS.
   D. INSTALL ADHESIVE STARTING AT BACK OF HOLE. AS REQUIRED BY MPII, USE MANUFACTURER SUPPLIED PISTON PLUG INJECTION SYSTEM FOR ALL HORIZONTAL AND VERTICALLY INCLINED HOLES.
   E. INSTALL ANCHOR BY SIMULTANEOUSLY TWISTING AND INSERTING INTO HOLE.
   F. ALLOW ANCHOR TO SET REQUIRED TIME. DO NOT DISTURB.
   G. TIGHTEN NUT. DO NOT OVER-TORQUE.
   H. MINIMUM CONCRETE AGE AT TIME OF INSTALLATION: 28 DAYS
   I. CONCRETE TEMPERATURE RANGE AT TIME OF INSTALLATION SHALL BE: 41DEG F TO 104DEG F.
   J. CONCRETE MOISTURE CONDITION AT TIME OF INSTALLATION: DRY.

STRUCTURAL MODIFICATIONS

1. REFER TO OTHER DISCIPLINE DRAWINGS FOR RELOCATION AND DEMOLITION OF PIPING, CONDUITS, FIXTURES, INSTRUMENTS, ETC. ASSOCIATED WITH STRUCTURES SHOWN TO BE DEMOLISHED.

2. ALL DEMOLITION, REMOVAL AND CONSTRUCTION ACTIVITIES SHALL BE CONDUCTED WITH CONSIDERATION FOR EXISTING STRUCTURES, EQUIPMENT, ETC. ANY DAMAGE WHICH MAY OCCUR BEYOND DESCRIBED DEMOLITION AND CONSTRUCTION SHALL BE REMEDIED AT CONTRACTOR'S EXPENSE AND OWNER/ENGINEER NOTIFIED.

3. CONTRACTOR SHALL REMOVE AND PROPERLY DISPOSE OF ALL DEMOLISHED CONCRETE AND OTHER MATERIALS FROM THE EXISTING STRUCTURES OFF SITE PRIOR TO THE NEW CONSTRUCTION.

4. UNLESS NOTED OTHERWISE, CUTTING EMBEDDED REBARS DUE TO PIPING, CONDUITS OR ANY OTHER PENETRATION THROUGH EXISTING CONCRETE STRUCTURES IS PROHIBITED. CONTRACTOR SHALL DETECT THE EXISTING REBAR LOCATIONS BY NONDESTRUCTIVE TESTING METHODS AND KEEP PENETRATIONS AWAY FROM THE EMBEDDED REBARS.

5. WHERE REMOVING EXISTING CONCRETE BUT RETAINING REBARS IS INDICATED ON DRAWINGS, SAWCUT EXISTING CONCRETE TO THE LIMITS SHOWN ON PLANS BUT NOT MORE THAN 3/4" DEEP TO AVOID DAMAGING OR NICKING THE REINFORCING.

6. WHERE DEMOLITION OF EXISTING CONCRETE WILL LEAVE EMBEDDED EXISTING REBARS EXPOSED, AN ADDITIONAL 1 1/2" CONCRETE AND REINFORCEMENT BEYOND LIMITS OF THE DEMOLITION SHALL BE REMOVED. THE 1 1/2" AREAS BEING REMOVED SHALL THEN BE PLACED BACK WITH CONCRETE STRUCTURAL REPAIR MATERIAL AS SPECIFIED TO PROVIDE CORROSION PROTECTION FOR THE EXPOSED EXISTING REBARS, UNLESS NOTED OTHERWISE.

7. ROUGHEN THE EXISTING CONCRETE SURFACES THAT WILL ENCOUNTER NEW CONCRETE. "ROUGHENED SURFACE" SHALL HAVE A UNIFORMLY ROUGHENED CONCRETE SURFACE TO A FULL AMPLITUDE (DISTANCE BETWEEN HIGH AND LOW POINTS OR SIDE TO SIDE) OF APPROXIMATELY 1/4" WITH SUITABLE TOOLS TO EXPOSE A FRESH FACE. APPLY BONDING AGENT TO THE EXISTING CONCRETE SURFACES PRIOR TO THE PLACEMENT OF NEW CONCRETE PER MANUFACTURER'S INSTRUCTIONS.

8. ALL EXPOSED EXISTING REBARS SHALL BE CLEANED BY ABRASIVE BLASTING AND COATED WITH AN EPOXY RESIN/PORTLAND CEMENT ADHESIVE BONDING AGENT TO PROVIDE CORROSION PROTECTION.

DEFERRED SUBMITTALS

1. FORWARD THE FOLLOWING DEFERRED COMPONENT SUBMITTALS TO THE BUILDING OFFICIAL FOR APPROVAL AFTER RECEIPT OF APPROVAL FROM THE OWNER'S REPRESENTATIVE. DO NOT FABRICATE OR INSTALL DEFERRED SUBMITTAL ITEMS UNTIL APPROVED BY THE BUILDING OFFICIAL.
2. THE FOLLOWING IS A LIST OF DEFERRED SUBMITTALS:
   A. PRECAST CONCRETE BUILDING: SPECIFICATION 03 40 16 "PRECAST CONCRETE BUILDINGS"
   B. METAL STAIRS: SPECIFICATION 05 51 00 "METAL STAIRS"
   C. GUARDRAILS AND HANDRAILS: SPECIFICATION 05 52 13 "PIPE AND TUBE RAILINGS"

IBC CHAPTER 17 SPECIAL INSPECTION REQUIREMENTS

1. THE OWNER OR THE OWNER'S REPRESENTATIVE IS REQUIRED TO PERFORM SPECIAL INSPECTIONS IN ACCORDANCE WITH IBC 2015 AND AS OUTLINED IN THE STATEMENT OF SPECIAL INSPECTION.

2. THE CONTRACTOR IS REQUIRED TO ACCOMMODATE THE ABOVE INSPECTIONS AND PROVIDE ACCESS TO THE ELEMENTS REQUIRING INSPECTION. IN ADDITION, THE CONTRACTOR SHALL PROVIDE 48 HOURS ADVANCED NOTICE TO THE OWNER OR THE OWNER'S REPRESENTATIVE REGARDING ALL CONSTRUCTION ACTIVITIES RELATED TO AND/OR AFFECTING THE REQUIRED SPECIAL INSPECTIONS.

ISSUED FOR BID

Freese and Nichols, Inc.
Texas Registered Engineering Firm F- 2144

STATE OF TEXAS
MICHAEL RAY ROBERTSON
59701
REGISTERED PROFESSIONAL ENGINEER
01/14/2022

FREESE AND NICHOLS
10497 Town and Country Way,
Suite 500
Houston, TX 77024
Phone - (713) 600-6800
Web - www.freese.com

City of Beaumont
COLLIERS RAW WATER PUMP STATION

STRUCTURAL

GENERAL NOTES II

F&N JOB NO.	BMT20326
DATE	01/07/2022
DESIGNED	MRR
DRAWN	JAW
REVISED	
CHECKED	PAB
FILE NAME	ST-BMT20326-PST-R21.rvt

NO.	ISSUE	BY	DATE

VERIFY SCALE 0 1
Bar is one inch on original drawing. If not one inch on this sheet, adjust scale.

SHEET S-2

SEQ. 98

Plot Date: 1/13/2022 9:00:58 AM

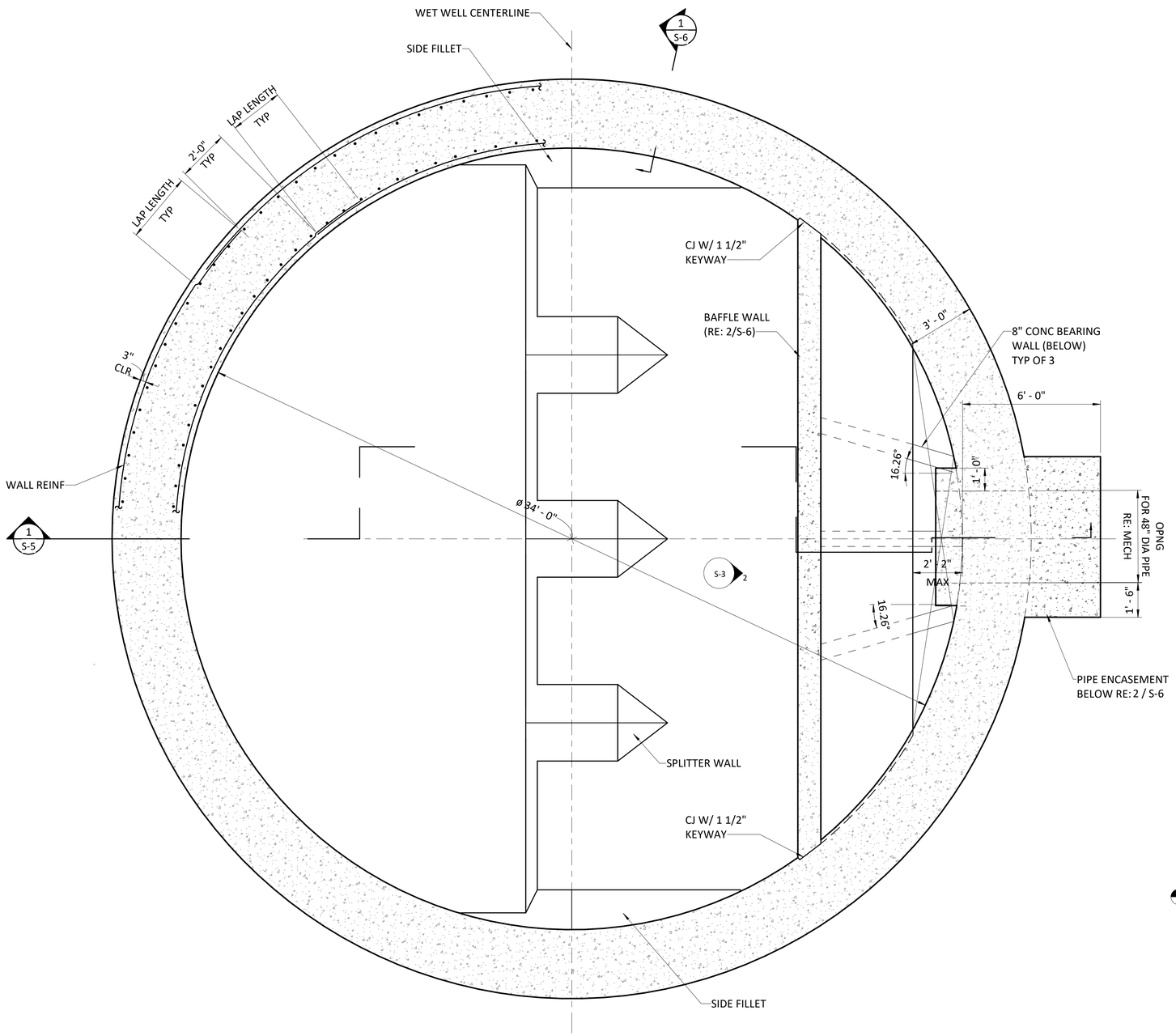

1 S-3 SECTIONAL PLAN AT ELEVATION -19'-0"
3/8" = 1'-0"

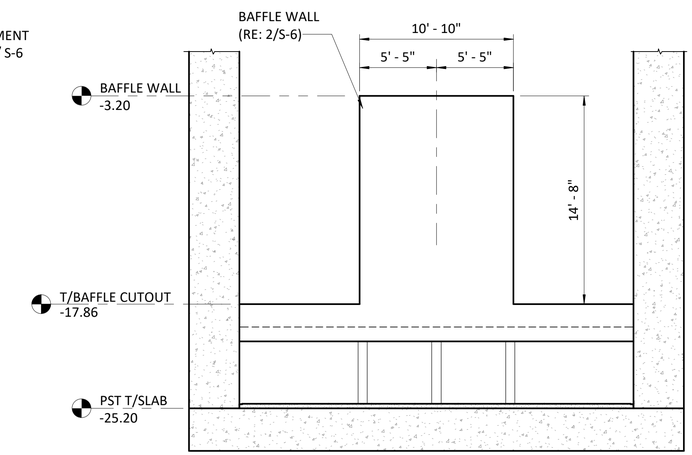

2 S-3 BAFFLE WALL ELEVATION
3/16" = 1'-0"

0 4' 8'
3/16"=1'-0"

0 1' 2' 4'
3/8"=1'-0"

ISSUED FOR BID

Freese and Nichols, Inc.
Texas Registered Engineering Firm F- 2144

STATE OF TEXAS
MICHAEL RAY ROBERTSON
59701
REGISTERED
PROFESSIONAL ENGINEER
01/14/2022

FREESE AND NICHOLS
10497 Town and Country Way,
Suite 500
Houston, TX 77024
Phone - (713) 600-6800
Web - www.freese.com

City of Beaumont
COLLIERS RAW WATER PUMP STATION

STRUCTURAL
PUMP STATION
SECTIONAL PLAN

F&N /JOB NO.	BMT20326
DATE	01/07/2022
DESIGNED	MRR
DRAWN	JAW
REVISED	
CHECKED	PAB
FILE NAME	ST-BMT20326-PST-R21.rvt

NO.	ISSUE	BY	DATE

VERIFY SCALE 0 1
Bar is one inch on original drawing. If not one inch on this sheet, adjust scale.

SHEET
S-3

SEQ.
99

Plot Date: 1/14/2022 10:40:06 AM

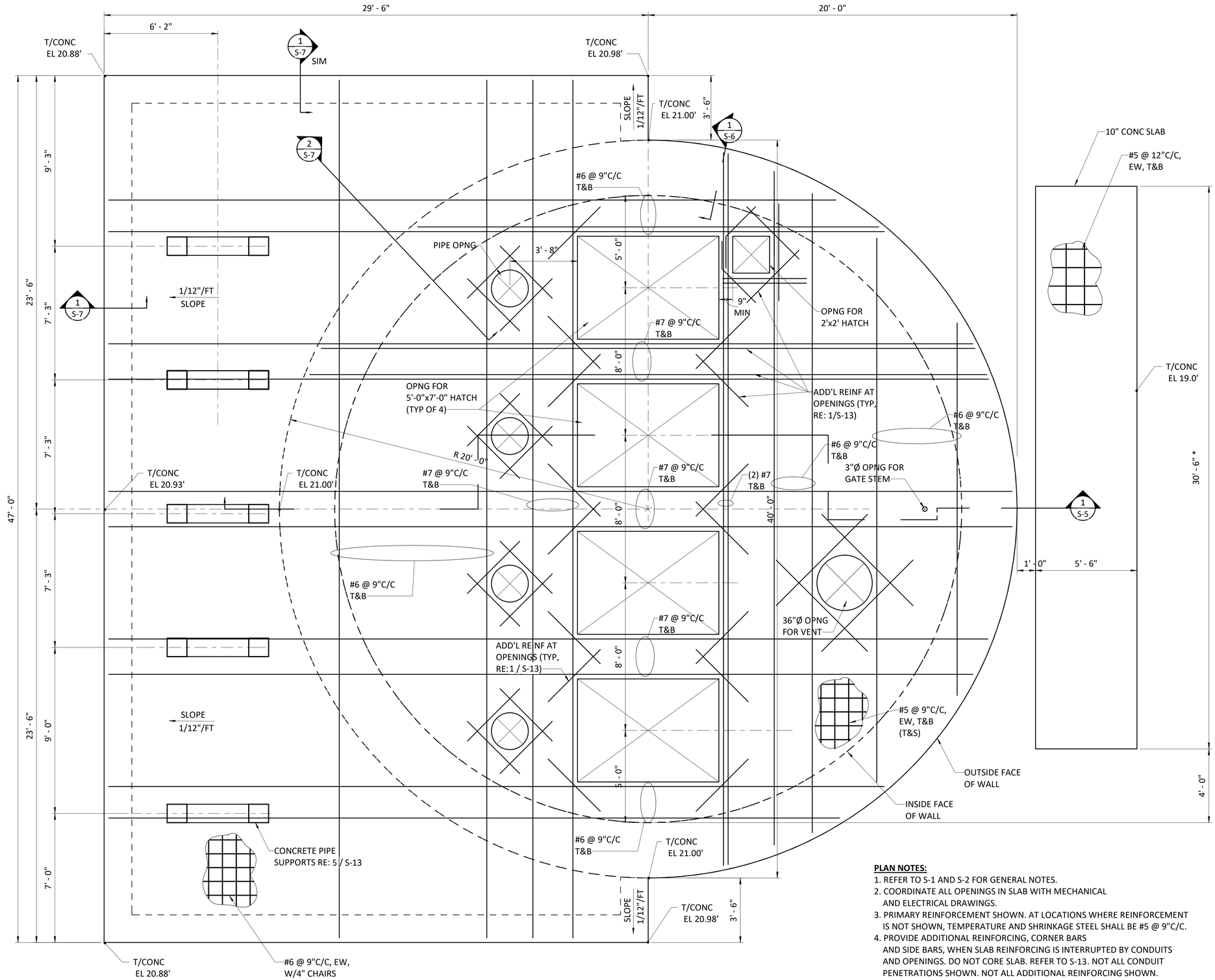

1 S-5 TOP PLAN
3/8" = 1'-0"

PLAN NOTES:

1. REFER TO S-1 AND S-2 FOR GENERAL NOTES.
2. COORDINATE ALL OPENINGS IN SLAB WITH MECHANICAL AND ELECTRICAL DRAWINGS.
3. PRIMARY REINFORCEMENT SHOWN. AT LOCATIONS WHERE REINFORCEMENT IS NOT SHOWN, TEMPERATURE AND SHRINKAGE STEEL SHALL BE #5 @ 9"C/C.
4. PROVIDE ADDITIONAL REINFORCING, CORNER BARS AND SIDE BARS, WHEN SLAB REINFORCING IS INTERRUPTED BY CONDUITS AND OPENINGS. DO NOT CORE SLAB. REFER TO S-13. NOT ALL CONDUIT PENETRATIONS SHOWN. NOT ALL ADDITIONAL REINFORCING SHOWN.
5. DIMENSIONS MARKED WITH "*" SHALL BE COORDINATED WITH EQUIPMENT MANUFACTURER.

0 1' 2' 4'
3/8"=1'-0"

ISSUED FOR BID

Freese and Nichols, Inc.
Texas Registered Engineering Firm F- 2144

STATE OF TEXAS
MICHAEL RAY ROBERTSON
59701
REGISTERED PROFESSIONAL ENGINEER
01/14/2022

FREESE AND NICHOLS
10497 Town and Country Way,
Suite 500
Houston, TX 77024
Phone - (713) 600-6800
Web - www.freese.com

City of Beaumont
COLLIERS RAW WATER PUMP STATION

STRUCTURAL
PUMP STATION
TOP PLAN

F&N JOB NO.	BMT20326
DATE	01/07/2022
DESIGNED	MRR
DRAWN	JAW
REVISED	
CHECKED	PAB
FILE NAME	ST-BMT20326-PST-R21.rvt

NO.	ISSUE	BY	DATE

VERIFY SCALE
0 1
Bar is one inch on original drawing. If not one inch on this sheet, adjust scale.

SHEET
S-4

SEQ.
100

Plot Date: 1/13/2022 9:01:02 AM

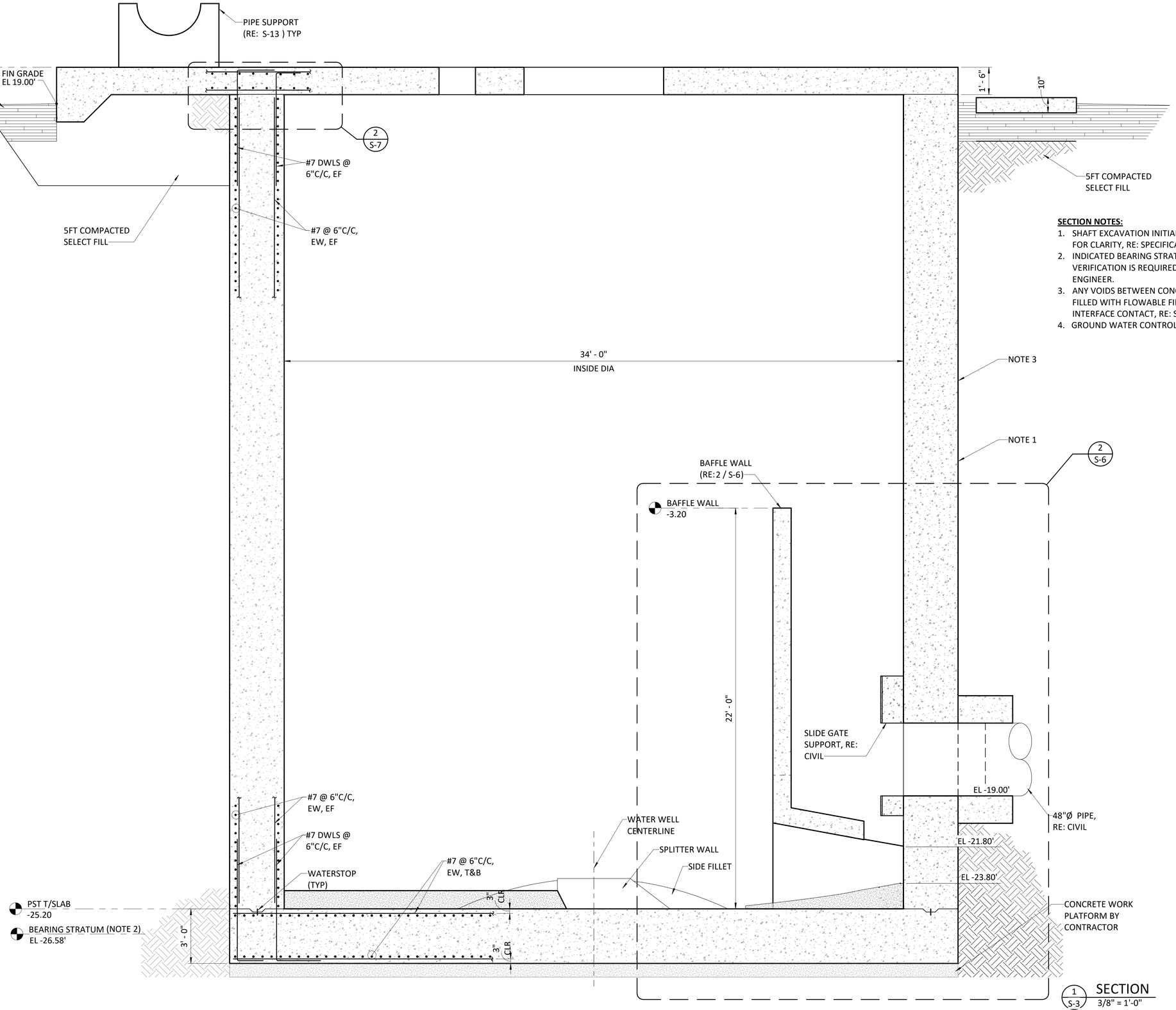

SECTION NOTES:

1. SHAFT EXCAVATION INITIAL SUPPORT SYSTEM NOT SHOWN FOR CLARITY, RE: SPECIFICATION 33 73 15.
2. INDICATED BEARING STRATUM IS APPROXIMATE. FIELD VERIFICATION IS REQUIRED BY A LICENSED GEOTECHNICAL ENGINEER.
3. ANY VOIDS BETWEEN CONCRETE AND EARTH SHALL BE FILLED WITH FLOWABLE FILL TO MAINTAIN SURFACE INTERFACE CONTACT, RE: SPECIFICATION 33 73 15.
4. GROUND WATER CONTROL, RE: SPECIFICATION 33 73 16.

1 S-3 SECTION
3/8" = 1'-0"

0 1' 2' 4'
3/8"=1'-0"

ISSUED FOR BID

Freese and Nichols, Inc.
Texas Registered Engineering Firm F- 2144

STATE OF TEXAS
MICHAEL RAY ROBERTSON
59701
REGISTERED PROFESSIONAL ENGINEER
01/14/2022

FREESE AND NICHOLS
10497 Town and Country Way,
Suite 500
Houston, TX 77024
Phone - (713) 600-6800
Web - www.freese.com

City of Beaumont
COLLIERS RAW WATER PUMP STATION

STRUCTURAL
PUMP STATION
BUILDING SECTION

F&N JOB NO. BMT20326
DATE 01/07/2022
DESIGNED MRR
DRAWN JAW
REVISED
CHECKED PAB
FILE NAME ST-BMT20326-PST-R21.rvt

NO.	ISSUE	BY	DATE

VERIFY SCALE 0 1
Bar is one inch on original drawing. If not one inch on this sheet, adjust scale.

SHEET S-5
SEQ. 101

Plot Date: 1/13/2022 9:01:03 AM

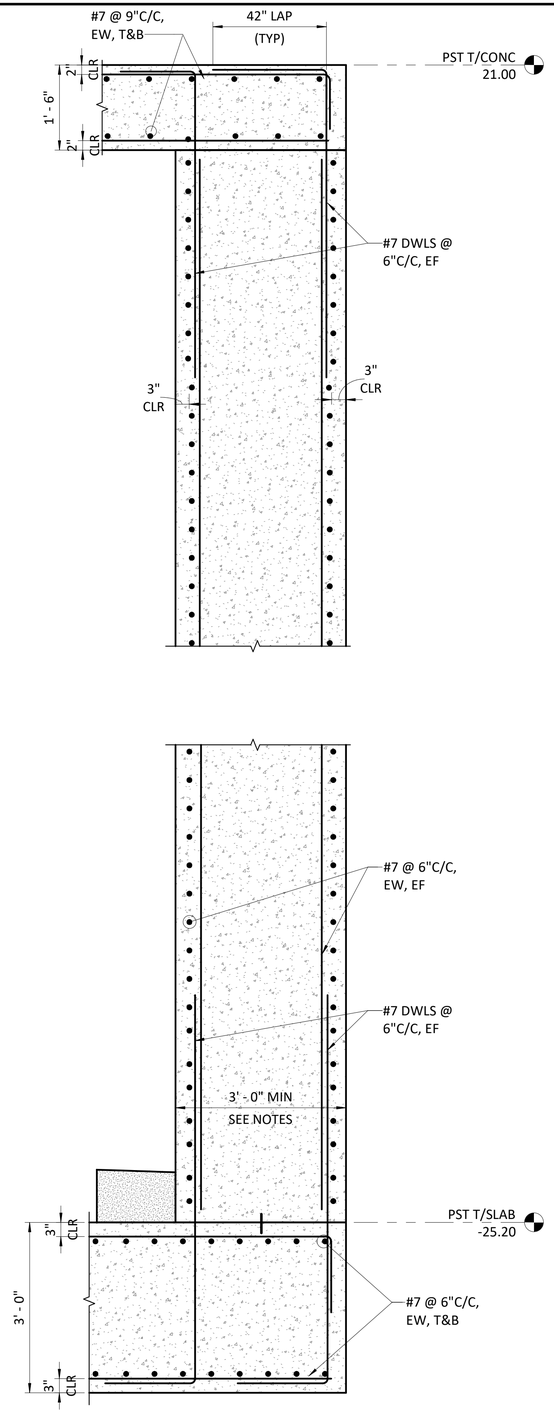

DETAIL NOTES:

1. INDICATED CONCRETE THICKNESS MAY INCREASE AS REQUIRED PER INSTALLATION METHOD.
2. THE CONCRETE COVER THICKNESS FOR INSIDE BARS AND THE REINFORCING BARS LOCATIONS SHALL BE MAINTAINED AS INDICATED ON THE DRAWING. THE CONCRETE COVER THICKNESS BETWEEN THE OUTSIDE BARS AND EXCAVATION SUPPORT MAY VARY BUT IT SHALL NOT BE LESS THAN 3".

1 / S-3 SECTION
3/4" = 1'-0"

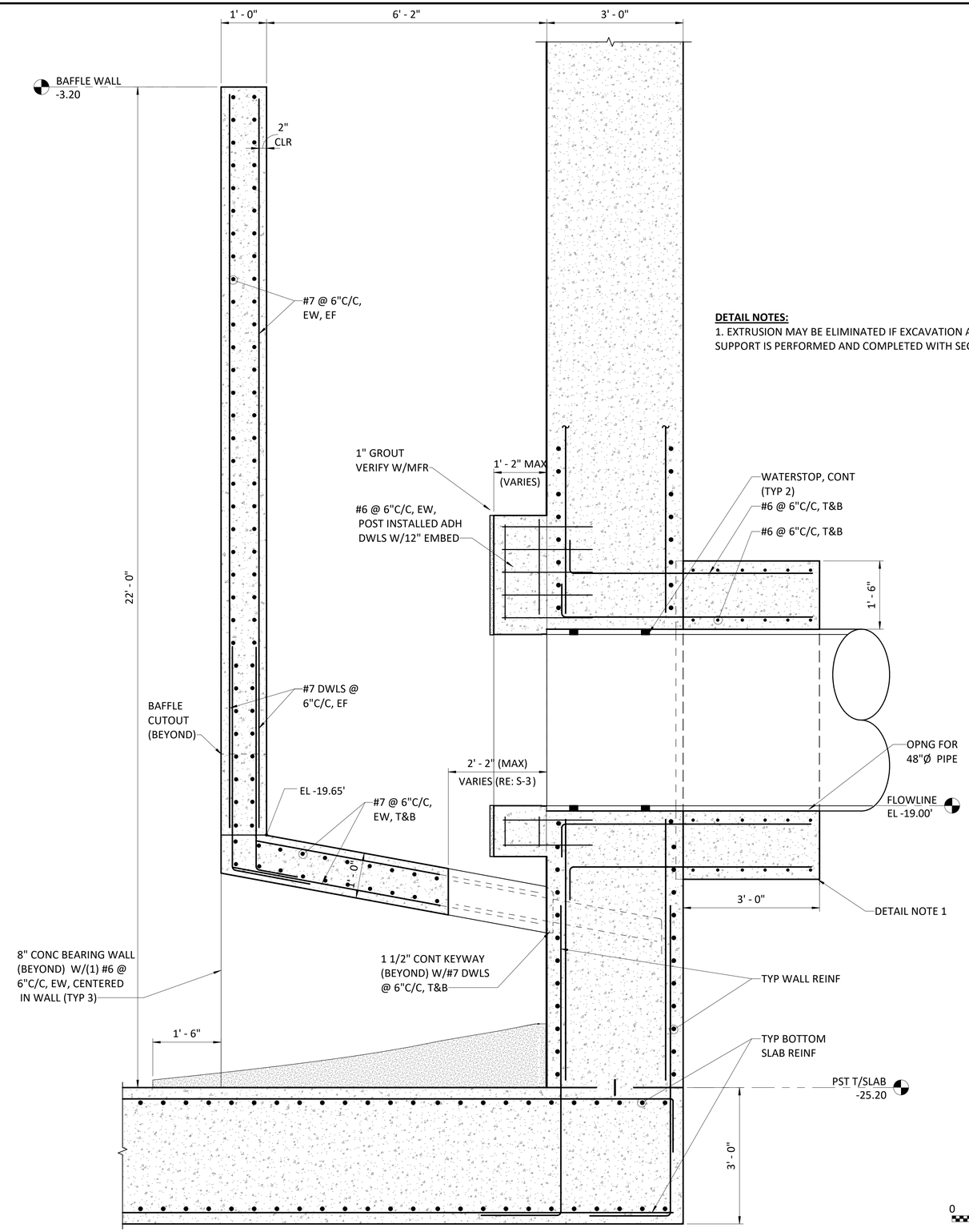

DETAIL NOTES:

1. EXTRUSION MAY BE ELIMINATED IF EXCAVATION AND SHAFT SUPPORT IS PERFORMED AND COMPLETED WITH SECANT PILES.

2 / S-5 BAFFLE WALL SECTION
3/4" = 1'-0"

0 6" 1' 2'
3/4"=1'-0"

ISSUED FOR BID

Freese and Nichols, Inc.
Texas Registered Engineering Firm F- 2144

STATE OF TEXAS
MICHAEL RAY ROBERTSON
59701
PROFESSIONAL ENGINEER
REGISTERED
01/14/2022

FREESE AND NICHOLS
10497 Town and Country Way,
Suite 500
Houston, TX 77024
Phone - (713) 600-6800
Web - www.freese.com

City of Beaumont
COLLIERS RAW WATER PUMP STATION

STRUCTURAL
PUMP STATION SECTIONS

F&N JOB NO.	BMT20326
DATE	01/07/2022
DESIGNED	MRR
DRAWN	JAW
REVISED	
CHECKED	PAB
FILE NAME	ST-BMT20326-PST-R21.rvt

NO.	ISSUE	BY	DATE

VERIFY SCALE 0 1
Bar is one inch on original drawing. If not one inch on this sheet, adjust scale.

SHEET S-6

SEQ. 102

Plot Date: 1/14/2022 10:40:08 AM

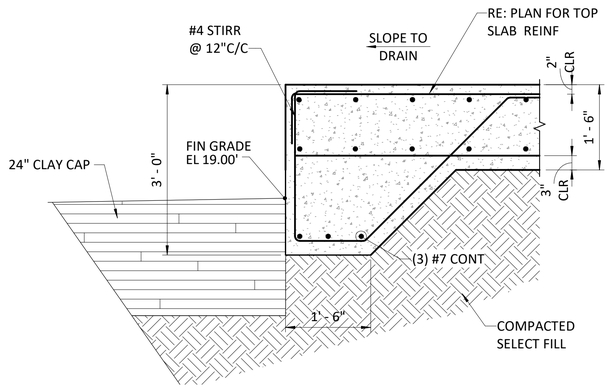

1 S-4 SECTION
3/4" = 1'-0"

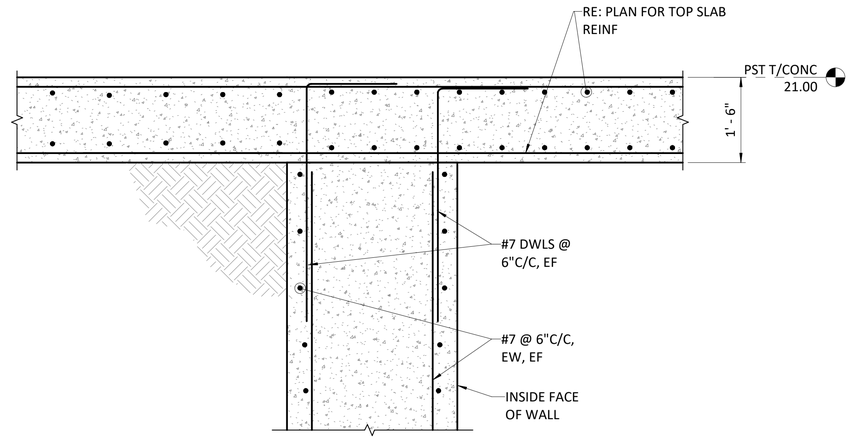

2 S-4 SECTION
3/4" = 1'-0"

0 6" 1' 2'
3/4"=1'-0"

ISSUED FOR BID

Freese and Nichols, Inc.
Texas Registered Engineering Firm F- 2144

STATE OF TEXAS
MICHAEL RAY ROBERTSON
59701
REGISTERED
PROFESSIONAL ENGINEER
01/14/2022

FREESE AND NICHOLS
10497 Town and Country Way,
Suite 500
Houston, TX 77024
Phone - (713) 600-6800
Web - www.freese.com

City of Beaumont
COLLIERS RAW WATER PUMP STATION

STRUCTURAL
PUMP STATION
SECTIONS AND DETAILS

F&N JOB NO.	BMT20326
DATE	01/07/2022
DESIGNED	MRR
DRAWN	JAW
REVISED	
CHECKED	PAB
FILE NAME	ST-BMT20326-PST-R21.rvt

NO.	ISSUE	BY	DATE

VERIFY SCALE 0 1
Bar is one inch on original drawing. If not one inch on this sheet, adjust scale.

SHEET S-7
SEQ. 103

Plot Date: 1/13/2022 9:01:06 AM

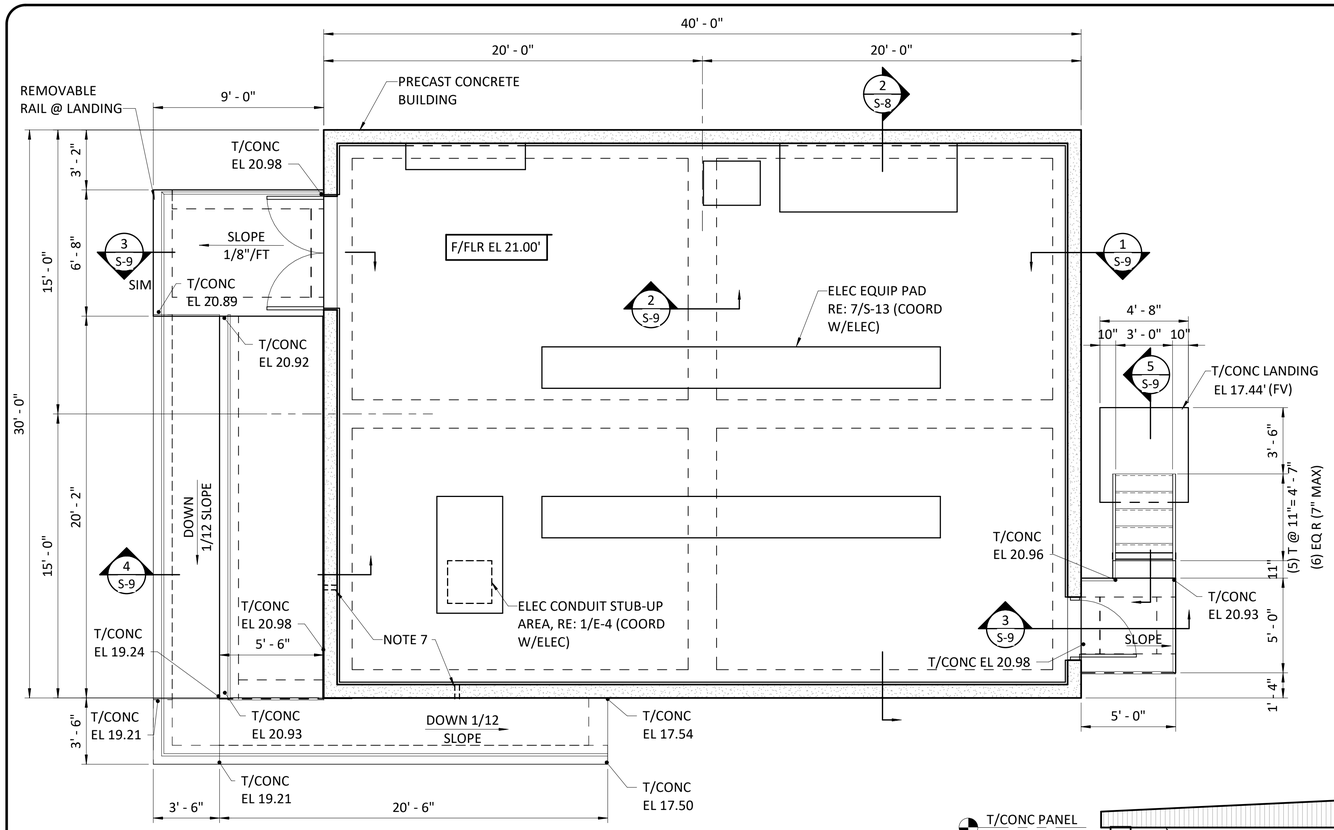

1 S-8 FOUNDATION PLAN
1/4" = 1'-0"

FOUNDATION PLAN NOTES:

1. FINISH FLOOR TOP OF CONCRETE ELEVATION INDICATED.
2. REFER TO CIVIL OR ARCHITECTURAL DRAWINGS FOR SIDEWALKS AND PAVING, UNLESS NOTED OTHERWISE.
3. PROVIDE 1/2" EXPANSION JOINT WITH SEALANT BETWEEN ALL SITE PAVING AND BUILDING FOUNDATION, UNLESS NOTED OTHERWISE.
4. ALL REQUIRED EQUIPMENT PADS ARE NOT SHOWN. COORDINATE WITH OTHER DISCIPLINES AND SPECIFIED EQUIPMENT FOR PAD QUANTITIES, LOCATIONS, AND DIMENSIONS.
5. 8" CONCRETE SLAB-ON-GRADE REINFORCED WITH #6 @ 6"C/C, EACH WAY, ON 4" CHAIRS.
6. REFER TO 7/S-13 FOR EQUIPMENT PAD DETAIL, TYPICAL.
7. PROVIDE ADDITIONAL REINFORCING WHEN SLAB OR BEAM REINFORCING IS INTERRUPTED BY CONDUITS. DO NOT CORE SLAB OR BEAMS. REFER TO 1 & 8/S-13. NOT ALL CONDUIT PENETRATIONS SHOWN. COORDINATE WITH ELECTRICAL FOR EXACT LOCATIONS, QUANTITIES, AND SIZES.
8. SUBGRADE SHALL BE COMPACTED SELECT FILL.
9. COORDINATE FOUNDATION WITH PRECAST CONCRETE BUILDING MANUFACTURER. REFER TO SPECIFICATION 03 40 16 PRECAST CONCRETE BUILDINGS.

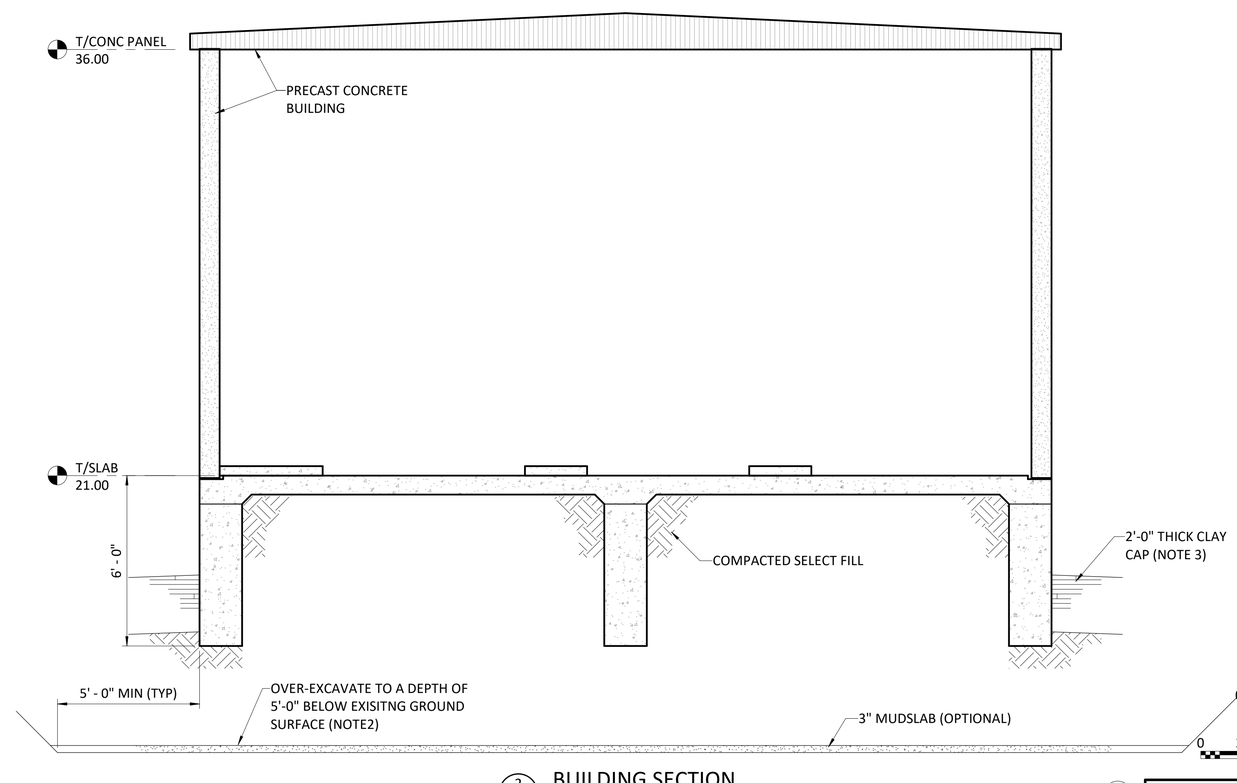

2 S-8 BUILDING SECTION
3/8" = 1'-0"

PRE-ENGINEERED PRECAST CONCRETE BUILDING NOTES:

1. THE PRECAST CONCRETE BUILDING, INCLUDING ROOF AND WALLS, SHALL BE DESIGNED FOR THE DESIGN LOADS INDICATED. THE BUILDING MANUFACTURER AND CONTRACTOR SHALL COORDINATE WITH OTHER DISCIPLINES FOR EQUIPMENT, OPENINGS, ETC. REFER TO SPECIFICATION 03 40 16 PRECAST CONCRETE BUILDINGS.
2. OVER-EXCAVATE AND REMOVE EXISTING FILL AND NATIVE FAT CLAY SOILS TO A MINIMUM DEPTH OF 5'-0" BELOW EXISTING GROUND SURFACE (EL 15.00'). BACKILL WITH COMPACTED SELECT FILL.
3. PROVIDE A 2'-0" THICK COMPACTED CLAY CAP AROUND THE PERIMETER OF THE FOUNDATION OVER THE SELECT FILL. EXTEND THE CLAY CAP A MINIMUM OF 2'-0" HORIZONTALLY BEYOND THE LIMITS OF THE SELECT FILL. A CLAY CAP IS NOT REQUIRED AT AREAS WITH CONCRETE PAVING OR FLATWORK.

ISSUED FOR BID

Freese and Nichols, Inc.
Texas Registered Engineering Firm F- 2144

STATE OF TEXAS
MICHAEL RAY ROBERTSON
59701
REGISTERED PROFESSIONAL ENGINEER
01/14/2022

FREESE AND NICHOLS
10497 Town and Country Way,
Suite 500
Houston, TX 77024
Phone - (713) 600-6800
Web - www.freese.com

City of Beaumont
COLLIERS RAW WATER PUMP STATION

STRUCTURAL
ELECTRICAL BUILDING
FOUNDATION PLAN AND SECTION

F&N JOB NO.	BMT20326
DATE	01/07/2022
DESIGNED	MRR
DRAWN	JAW
REVISED	
CHECKED	PAB
FILE NAME	ST-BMT20326-ELB-R21.rvt

NO.	ISSUE	BY	DATE

VERIFY SCALE
Bar is one inch on original drawing. If not one inch on this sheet, adjust scale.

SHEET S-8
SEQ. 104

Plot Date: 1/13/2022 8:57:41 AM

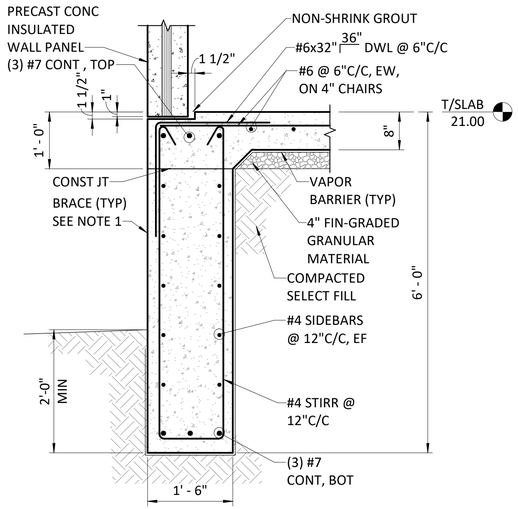

DETAIL NOTES:

1. BRACE EXTERIOR SIDE OF FOUNDATION PRIOR TO BACKFILLING AND FORMING SLAB, TYPICAL ALL SIDES.

1 / S-8 EXTERIOR GRADE BEAM SECTION
3/4" = 1'-0"

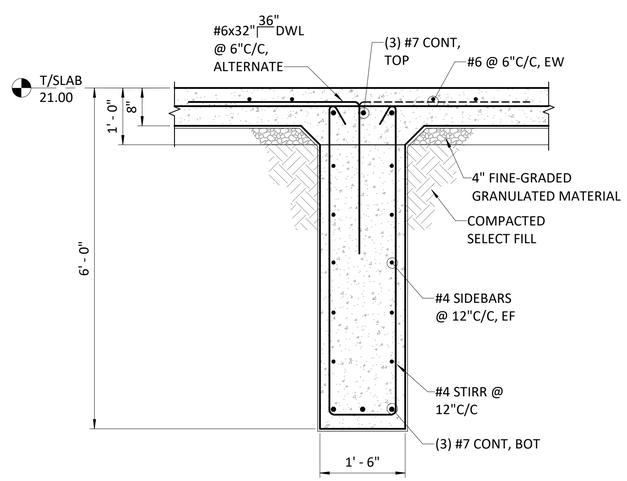

DETAIL NOTES:

1. REFER TO 1 / S-9 FOR INFORMATION NOT SHOWN.

2 / S-8 INTERIOR GRADE BEAM SECTION
3/4" = 1'-0"

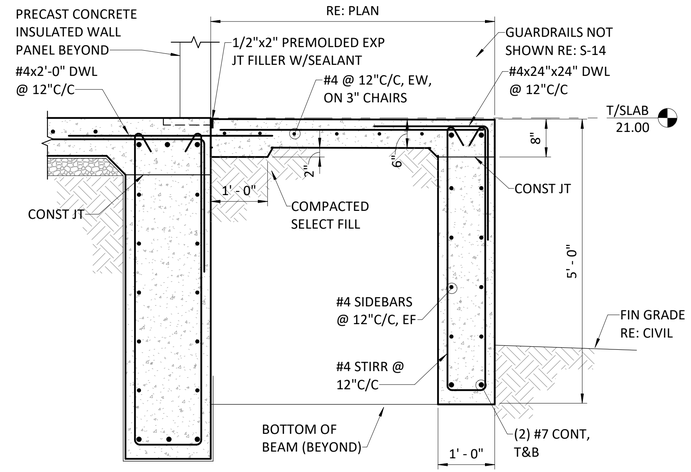

DETAIL NOTES:

1. REFER TO 1 / S-9 FOR INFORMATION NOT SHOWN.

3 / S-8 TOP LANDING SECTION
3/4" = 1'-0"

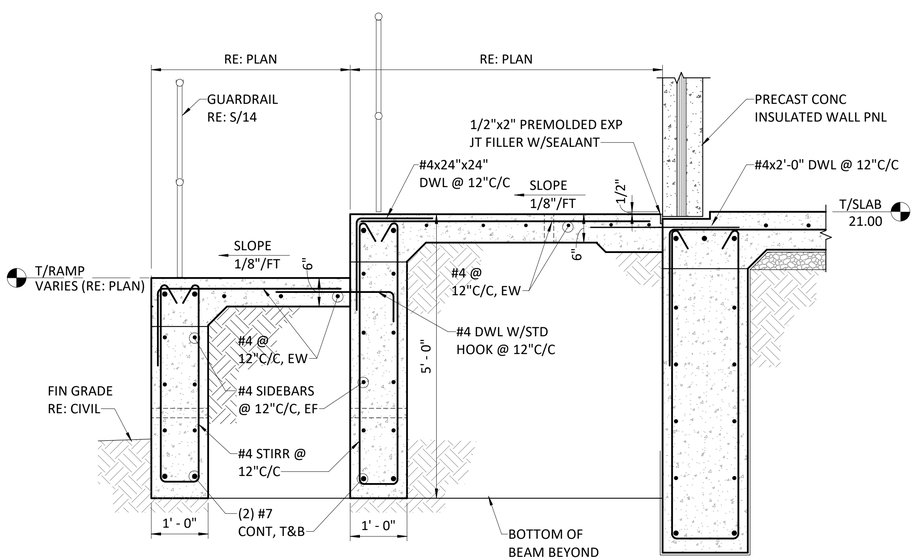

DETAIL NOTES:

1. REFER TO 1 / S-9 FOR INFORMATION NOT SHOWN.

4 / S-8 SECTION
3/4" = 1'-0"

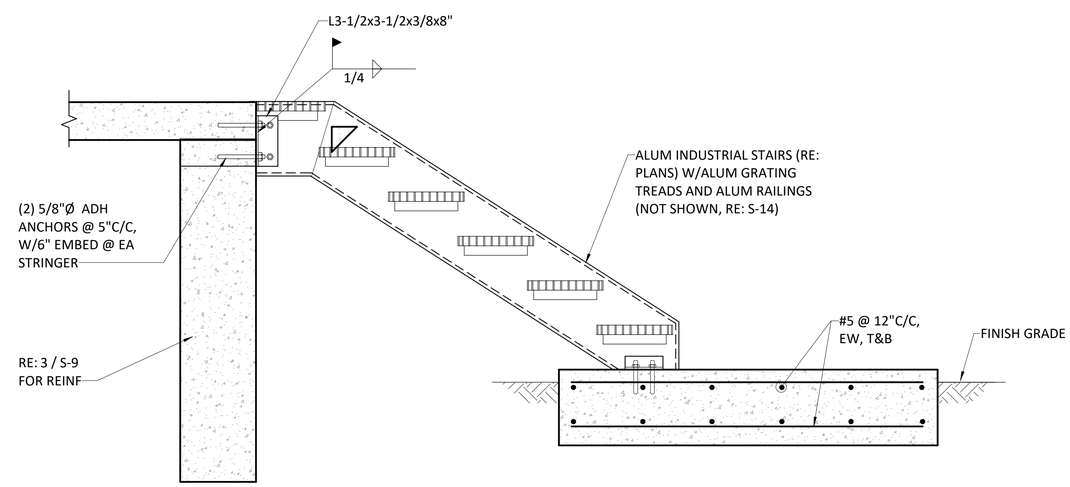

5 / S-8 STAIR SECTION
1" = 1'-0"

0 6" 1' 2'
1"=1'-0"

0 6" 1' 2'
3/4"=1'-0"

ISSUED FOR BID

Freese and Nichols, Inc.
Texas Registered Engineering Firm F- 2144

STATE OF TEXAS
MICHAEL RAY ROBERTSON
59701
REGISTERED
PROFESSIONAL ENGINEER
01/14/2022

FREESE AND NICHOLS
10497 Town and Country Way,
Suite 500
Houston, TX 77024
Phone - (713) 600-6800
Web - www.freese.com

City of Beaumont
COLLIERS RAW WATER PUMP STATION

STRUCTURAL
ELECTRICAL BUILDING
SECTIONS AND DETAILS

F&N JOB NO.	BMT20326
DATE	01/07/2022
DESIGNED	MRR
DRAWN	JAW
REVISED	
CHECKED	PAB
FILE NAME	ST-BMT20326-ELB-R21.rvt

NO.	ISSUE	BY	DATE

VERIFY SCALE 0 1
Bar is one inch on original drawing. If not one inch on this sheet, adjust scale.

SHEET
S-9

SEQ.
105

Plot Date: 1/13/2022 8:57:42 AM

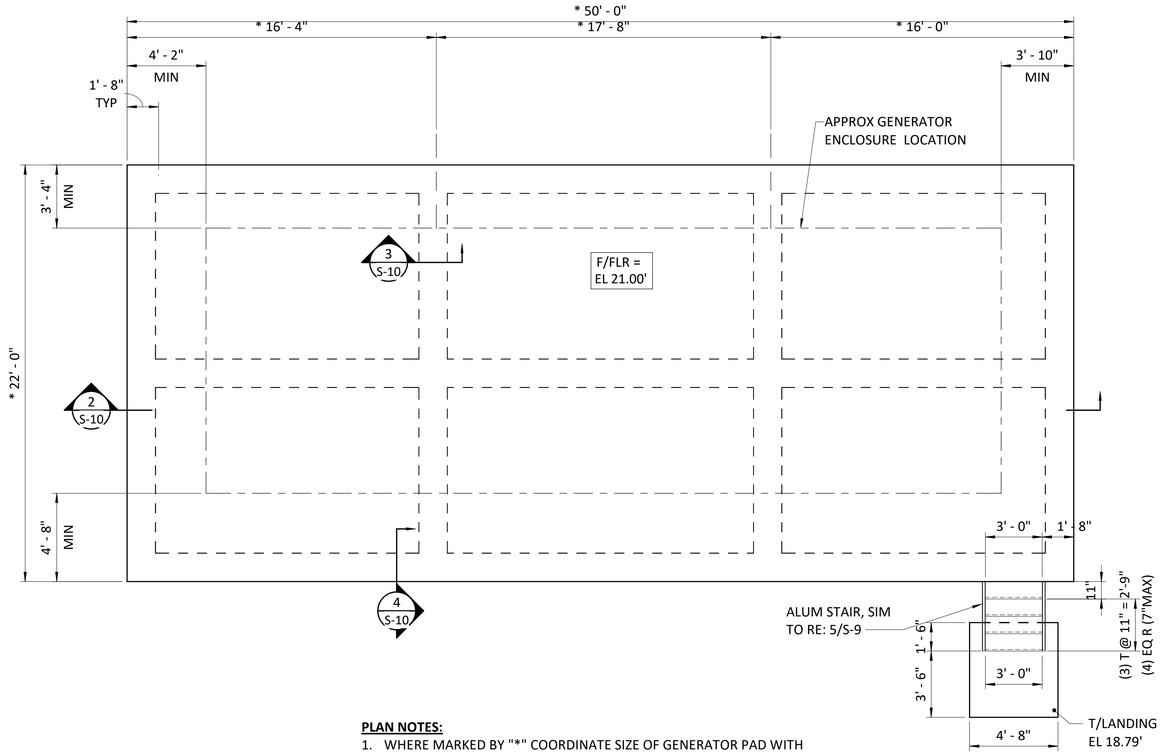

PLAN NOTES:

1. WHERE MARKED BY "*" COORDINATE SIZE OF GENERATOR PAD WITH GENERATOR MANUFACTURER PRIOR TO FABRICATION OR CONSTRUCTION. DIMENSIONS FROM GENERATOR TO EDGE OR PAD ARE SHOWN AS MINIMUMS.
2. COORDINATE CONDUIT PENETRATIONS WITH ELECTRICAL AND EQUIPMENT MANUFACTURER.

1 / S-5 GENERATOR PAD FOUNDATION PLAN

1/4" = 1'-0"

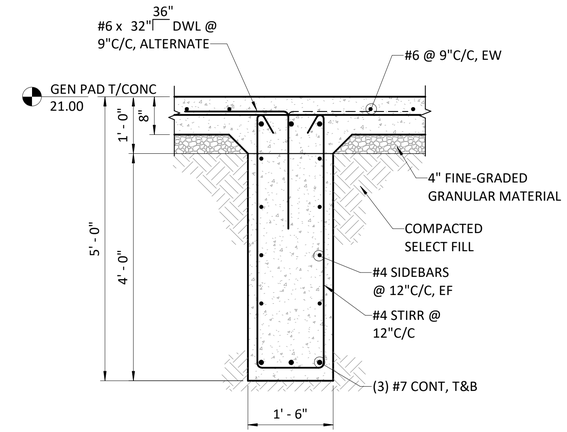

3 / S-10 INTERIOR BEAM SECTION

3/4" = 1'-0"

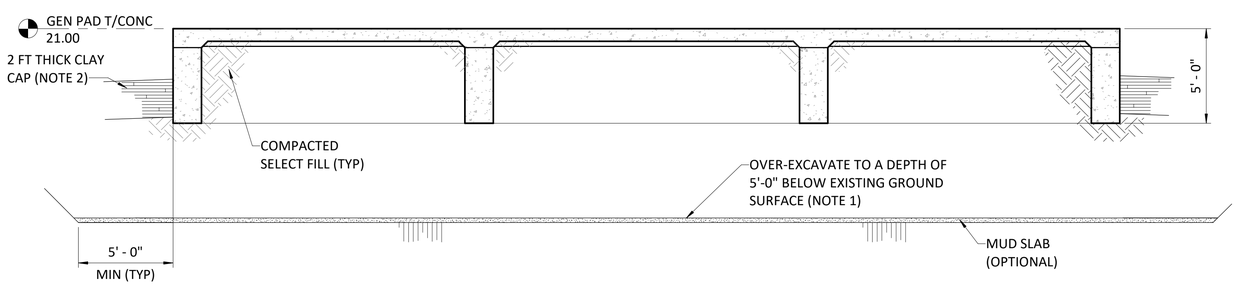

NOTES:

1. OVER-EXCAVATE AND REMOVE EXISTING FILL AND NATIVE FAT CLAY SOILS TO A MINIMUM DEPTH OF 5'-0" BELOW EXISTING GROUND SURFACE (EL 14.00). BACKFILL WITH COMPACTED SELECT FILL.
2. PROVIDE A 2'-0" THICK COMPACTED CLAY CAP AROUND THE PERIMETER OF THE FOUNDATION OVER THE SELECT FILL. EXTEND THE CLAY CAP A MINIMUM OF 2'-0" HORIZONTALLY BEYOND THE LIMITS OF THE SELECT FILL. A CLAY CAP IS NOT REQUIRED AT AREAS WITH CONCRETE PAVING OR FLATWORK.

2 / S-10 SECTION

1/4" = 1'-0"

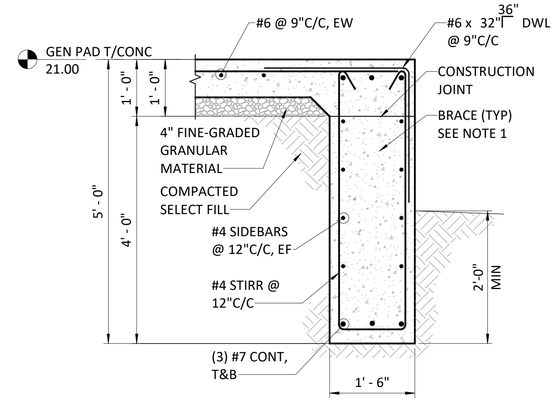

DETAIL NOTES:

1. BRACE EXTERIOR SIDE OF FOUNDATION PRIOR TO BACKFILLING AND FORMING SLAB, TYPICAL ALL SIDES.

4 / S-10 EXTERIOR BEAM SECTION

3/4" = 1'-0"

0 6" 1' 2'
3/4"=1'-0"
0 1' 2' 4'
3/8"=1'-0"
0 2' 4' 8'
1/4"=1'-0"

ISSUED FOR BID

Freese and Nichols, Inc.
Texas Registered Engineering Firm F- 2144

STATE OF TEXAS
MICHAEL RAY ROBERTSON
59701
REGISTERED PROFESSIONAL ENGINEER
01/14/2022

FREESE AND NICHOLS
10497 Town and Country Way,
Suite 500
Houston, TX 77024
Phone - (713) 600-6800
Web - www.freese.com

City of Beaumont
COLLIERS RAW WATER PUMP STATION

STRUCTURAL
GENERATOR & TRANSFORMER PADS
FOUNDATION PLAN AND SECTIONS

F&N JOB NO.	BMT20326
DATE	01/07/2022
DESIGNED	MRR
DRAWN	JAW
REVISED	
CHECKED	PAB
FILE NAME	ST-BMT20326-PST-R21.rvt

NO.	ISSUE	BY	DATE

VERIFY SCALE 0 1
Bar is one inch on original drawing. If not one inch on this sheet, adjust scale.

SHEET S-10
SEQ. 106

Plot Date: 1/13/2022 9:01:08 AM

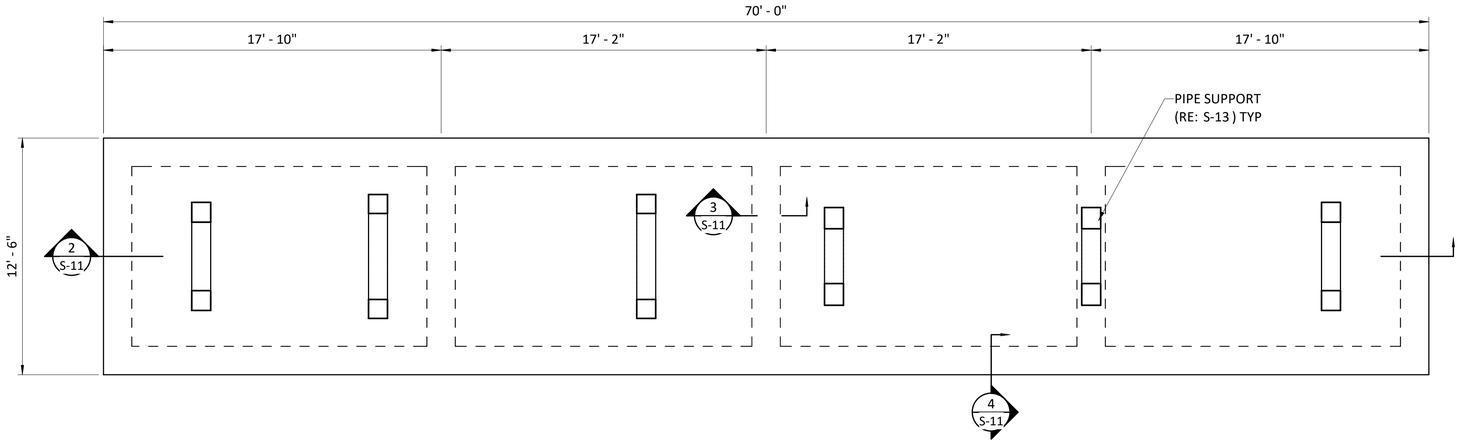

1 S-5 METER RUN PAD FOUNDATION PLAN
1/4" = 1'-0"

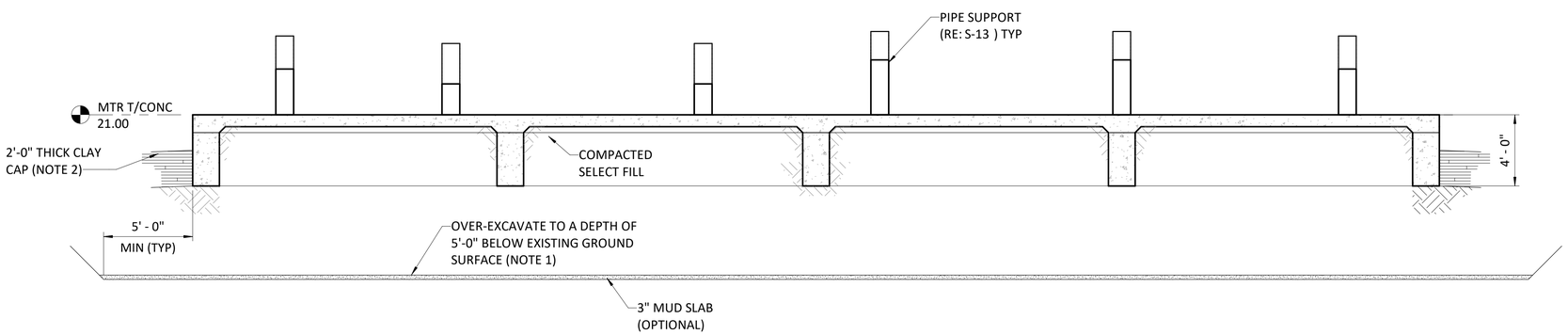

2 S-11 SECTION
1/4" = 1'-0"

NOTES:

1. OVER-EXCAVATE AND REMOVE EXISTING FILL AND NATIVE FAT CLAY SOILS TO A MINIMUM DEPTH OF 5'-0" BELOW EXISTING GROUND SURFACE (EL 15.00'). BACKFILL WITH COMPACTED SELECT FILL.
2. PROVIDE A 2'-0" THICK COMPACTED CLAY CAP AROUND THE PERIMETER OF THE FOUNDATION OVER THE SELECT FILL. EXTEND THE CLAY CAP A MINIMUM OF 2'-0" HORIZONTALLY BEYOND THE LIMITS OF THE SELECT FILL. A CLAY CAP IS NOT REQUIRED AT AREAS WITH CONCRETE PAVING OR FLATWORK.

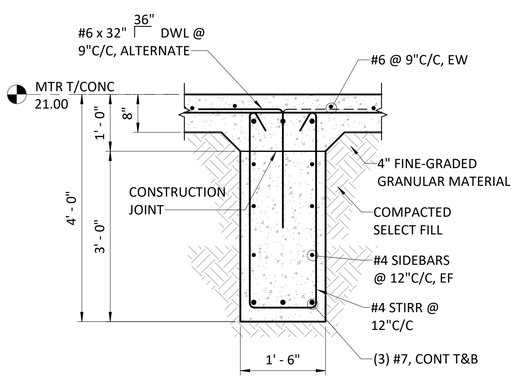

3 S-11 INTERIOR BEAM SECTION
3/4" = 1'-0"

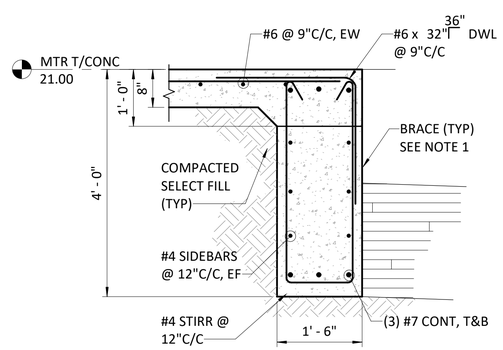

DETAIL NOTES:

1. BRACE EXTERIOR SIDE OF FOUNDATION PRIOR TO BACKFILLING AND FORMING SLAB, TYPICAL ALL SIDES.

4 S-11 EXTERIOR BEAM SECTION
3/4" = 1'-0"

0 6" 1' 2'
3/4"=1'-0"

0 2' 4' 8'
1/4"=1'-0"

ISSUED FOR BID

Freese and Nichols, Inc.
Texas Registered Engineering Firm F- 2144

STATE OF TEXAS
MICHAEL RAY ROBERTSON
64701
REGISTERED
PROFESSIONAL ENGINEER
01/14/2022

FREESE AND NICHOLS
10497 Town and Country Way,
Suite 500
Houston, TX 77024
Phone - (713) 600-6800
Web - www.freese.com

City of Beaumont
COLLIERS RAW WATER PUMP STATION

STRUCTURAL
METER RUN SLAB
FOUNDATION PLAN AND SECTIONS

F&N JOB NO.	BMT20326
DATE	01/07/2022
DESIGNED	MRR
DRAWN	JAW
REVISED	
CHECKED	PAB
FILE NAME	ST-BMT20326-PST-R21.rvt

NO.	BY	DATE	ISSUE

VERIFY SCALE 0 1
Bar is one inch on original drawing. If not one inch on this sheet, adjust scale.

SHEET
S-11

SEQ.
107

Plot Date: 1/13/2022 9:01:09 AM

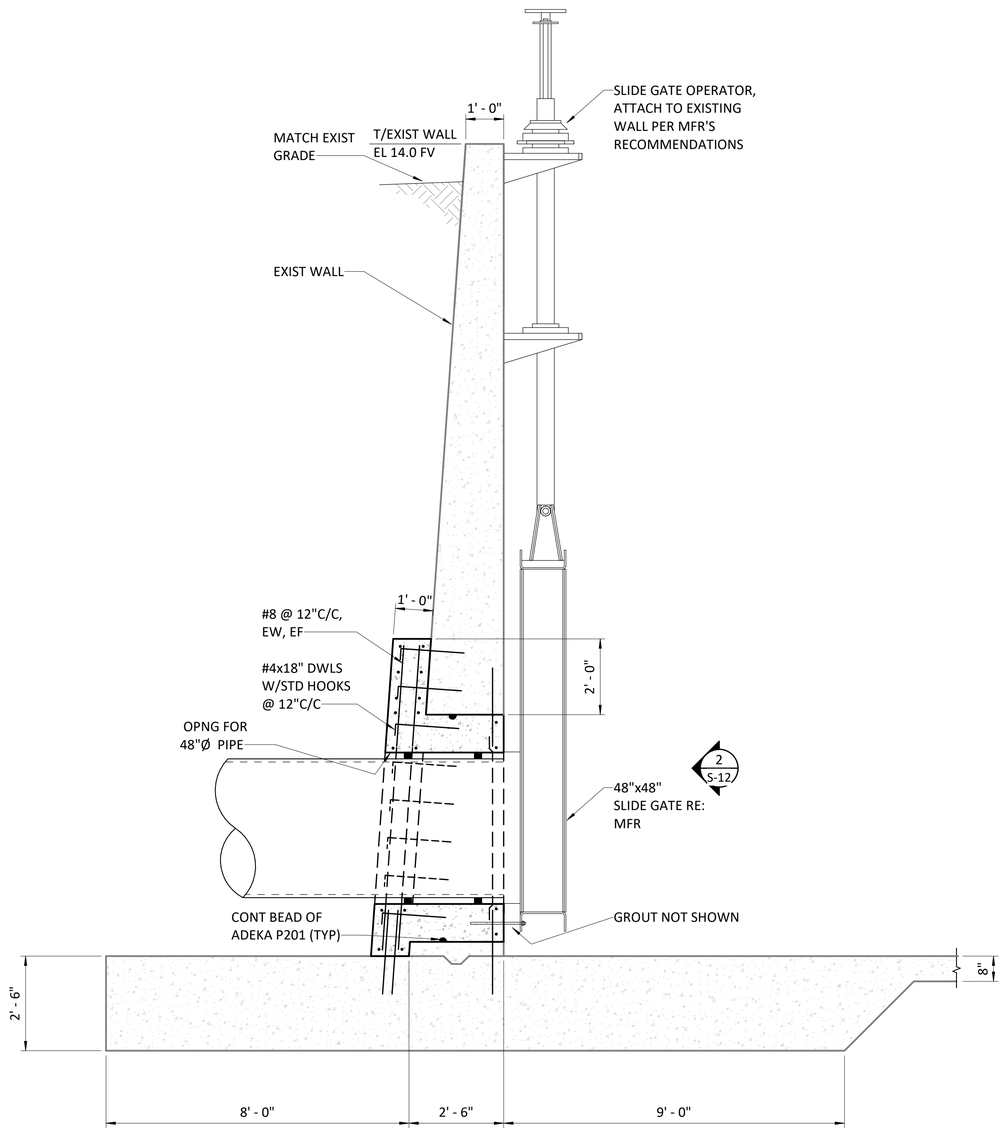

DETAIL NOTES:

1. SLIDE GATE DIMENSIONS SHOWN ARE BASED ON A 50.8"OUTSIDE DIAMETER FRP PIPE.
2. IF RCP PIPE OR ALTERNATE MATERIAL OF PIPE IS USED WITH A LARGER OUTSIDE DIAMETER, INCREASE SIZE OF SLIDE GATE AS REQUIRED TO MAINTAIN PROPER WIDTH CLEARANCE BETWEEN THE GATE BOLT HOLES AND PIPE. VERIFY WITH MANUFACTURER.
3. INSTALL SLIDE GATE PER MANUFACTURERS RECOMMENDATIONS. NOT ALL CONNECTIONS SHOWN.

1 SECTION
1/2" = 1'-0"

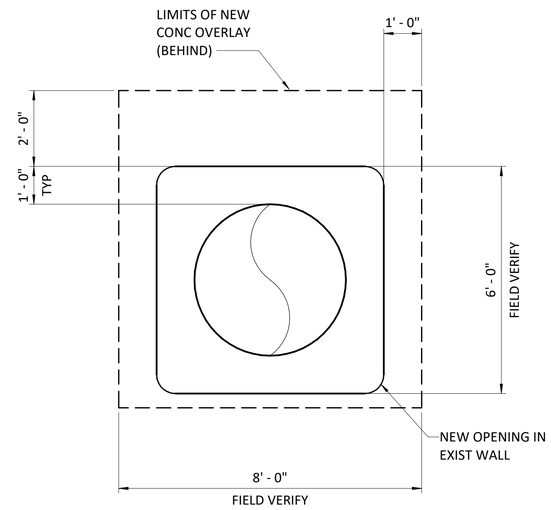

DETAIL NOTES:

1. SLIDE GATE NOT SHOWN.
2. LIMITS OF EXSTING WALL NOT SHOWN.

2 S-12 ELEVATION
1/2" = 1'-0"

0 1' 2' 4'
1/2"=1'-0"

ISSUED FOR BID

Freese and Nichols, Inc.
Texas Registered Engineering Firm F- 2144

STATE OF TEXAS
MICHAEL RAY ROBERTSON
59701
REGISTERED PROFESSIONAL ENGINEER
01/14/2022

FREESE AND NICHOLS
10497 Town and Country Way,
Suite 500
Houston, TX 77024
Phone - (713) 600-6800
Web - www.freese.com

City of Beaumont
COLLIERS RAW WATER PUMP STATION

STRUCTURAL
LAWSON PUMP STATION
PIPE PENETRATION IN EXISTING WALL

F&N JOB NO.	BMT20326
DATE	01/07/2022
DESIGNED	MRR
DRAWN	JAW
REVISED	
CHECKED	PAB
FILE NAME	ST-BMT20326-PST-R21.rvt

NO.	ISSUE	BY	DATE

VERIFY SCALE 0 1
Bar is one inch on original drawing. If not one inch on this sheet, adjust scale.

SHEET
S-12
SEQ.
108

Plot Date: 1/13/2022 9:01:10 AM

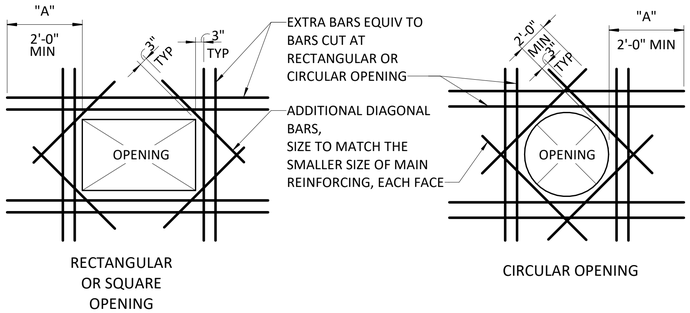

DETAIL NOTES:

1. DISCONTINUE TYPICAL REINFORCING AT OPENING.
2. PLACE ADDITIONAL BARS IN SAME ORIENTATION AND POSITION AS BARS CUT BY OPENING. PROVIDE ONE SET OF BARS FOR EACH LAYER OF REINFORCING CUT.
3. "A" = 36 BAR DIAMETERS (24" MINIMUM). PROVIDE STANDARD HOOK IF FULL EMBEDMENT LENGTH IS NOT POSSIBLE.
4. REINFORCING STEEL IS TO BE CARRIED ACROSS ALL CONSTRUCTION JOINTS.
5. SEE MECHANICAL AND ARCHITECTURAL DRAWINGS FOR SLAB AND WALL OPENING NOT SHOWN ON STRUCTURAL DRAWINGS.
6. ADDITIONAL REINFORCING MAY BE OMITTED ONLY WHERE OPENING IS FRAMED BY BEAMS OR WALLS.
7. ADDITIONAL REINFORCING NOT REQUIRED WHEN SPECIFIED REINFORCING IS NOT CUT.
8. ALL REINFORCING SPACING SHALL BE EQUAL TO OR GREATER THAN 3" CENTER TO CENTER.

1 TYPICAL WALL OR SLAB OPENING ADDITIONAL REINFORCEMENT

NOT TO SCALE

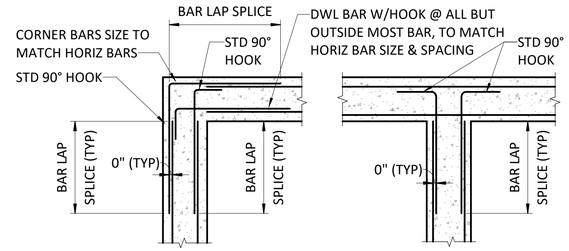

DETAIL NOTES:

1. REINFORCING SHOWN APPLIES TO ALL TOP, BOTTOM AND SIDE BARS. ALL REQUIRED BARS ARE NOT SHOWN IN DETAIL.
2. AT CONTRACTOR'S OPTION, UNLESS NOTED OTHERWISE, ELIMINATE DOWELS AND TERMINATE HORIZONTAL BARS WITH STANDARD HOOKS.

2 CORNER & INTERSECTION REINFORCEMENT

NOT TO SCALE

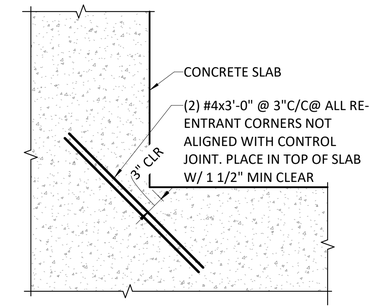

3 TYPICAL SLAB AT CORNER REINFORCING

NOT TO SCALE

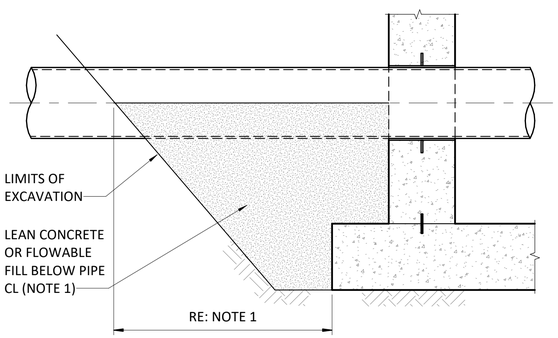

DETAIL NOTES:

1. CONCRETE FILL SHALL EXTEND TO THE LIMITS OF THE EXCAVATION, BUT NOT LESS THAN THE PIPE DIAMETER OR 1'-0", WHICHEVER IS GREATER. THE WIDTH OF FILL BELOW PIPE SHALL NOT BE LESS THAN 2'-0" PLUS WIDTH OF PIPE OUTSIDE DIAMETER.
2. DO NOT ENCASE RESTRAINED OR UNRESTRAINED COUPLINGS.

4 PIPE PENETRATION DETAIL

NOT TO SCALE

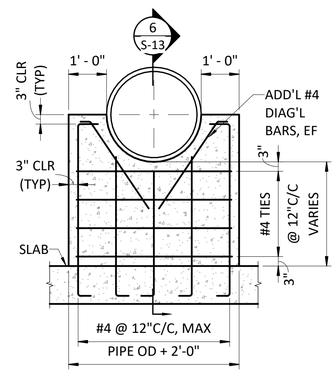

5 PIPE SUPPORT PAD

NOT TO SCALE

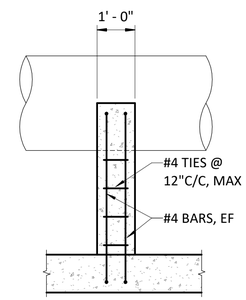

6 S-13 SECTION AT PIPE SUPPORT PAD

NOT TO SCALE

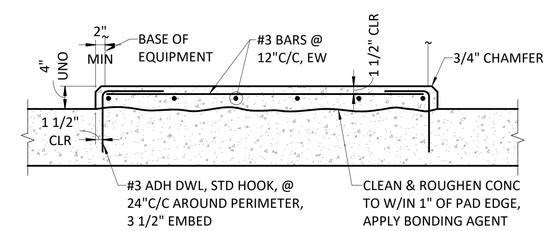

7 INTERIOR EQUIPMENT PAD DETAIL

NOT TO SCALE

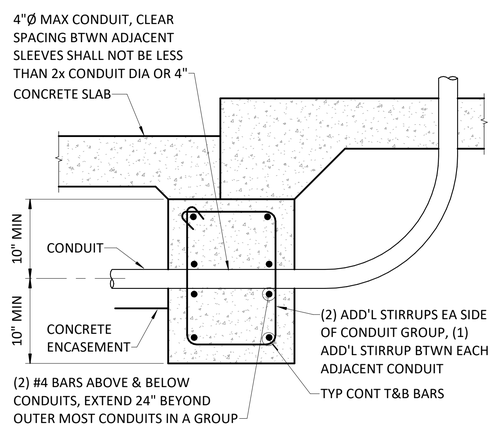

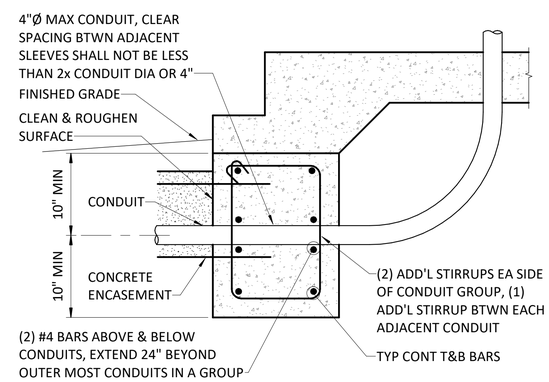

DETAIL NOTES:

1. DOWEL DUCT BANK TO GRADE BEAM WITH A MINIMUM OF (4) #4 BARS, EPOXY, AND 8" EMBEDMENT.

8 TYPICAL HORIZONTAL CONDUIT PENETRATION THRU GRADE BEAM

NOT TO SCALE

ISSUED FOR BID

Freese and Nichols, Inc.
Texas Registered Engineering Firm F-2144
STATE OF TEXAS REGISTERED PROFESSIONAL ENGINEER MICHAEL RAY ROBERTSON 59701 01/14/2022
FREESE AND NICHOLS
10497 Town and Country Way, Suite 500
Houston, TX 77024
Phone - (713) 600-6800
Web - www.freese.com

City of Beaumont
COLLIERS RAW WATER PUMP STATION

STRUCTURAL

STANDARD SECTIONS AND DETAILS I

F&N JOB NO.	BMT20326
DATE	01/07/2022
DESIGNED	MRR
DRAWN	JAW
REVISED	
CHECKED	PAB
FILE NAME	ST-BMT20326-PST-R21.rvt

NO.	ISSUE	BY	DATE

VERIFY SCALE 0 1
Bar is one inch on original drawing. If not one inch on this sheet, adjust scale.

SHEET S-13
SEQ. 109

Plot Date: 1/13/2022 9:01:11 AM

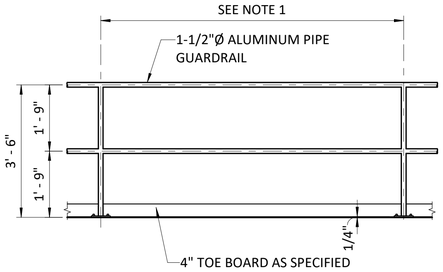

DETAIL NOTES:

1. POST SPACING SHALL NOT EXCEED MAXIMUM SPACING REQUIRED BY LOCAL OR STATE CODES, OR OSHA REQUIREMENTS, OR 5'-0" CENTERS, WHICHEVER IS LEAST. GUARDRAIL POSTS AT STAIRS SHALL BE SPACED AS REQUIRED TO PRODUCE WITH UNIFORM SPACING BETWEEN POSTS.
2. PROVIDE EXPANSION JOINTS AT MAXIMUM 30'-0" INTERVALS OR AS RECOMMENDED BY MANUFACTURER, WHICHEVER IS LESSER ALONG RAILS AND TOE BOARDS.
3. NOTCH TOE BOARD AT GUARDRAIL POSTS TO CLEAR POST BASE PLATE.
4. CENTERLINE OF GUARDRAIL SHALL BE 6" MIN FROM EDGE OF CONCRETE.

1 GUARDRAIL DETAIL
NOT TO SCALE

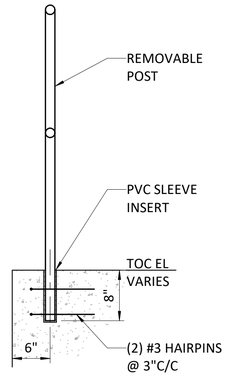

DETAIL NOTE:
REFER TO 3 / S-14 FOR ADDITIONAL INFORMATION.

2 REMOVABLE GUARDRAIL DETAIL
NOT TO SCALE

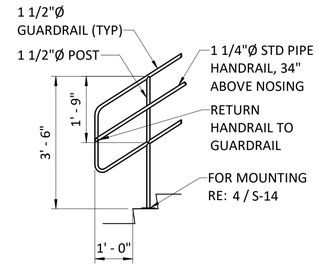

TYPICAL STAIR END (BOTTOM)

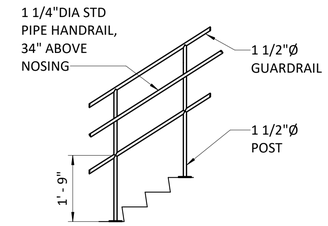

TYPICAL STAIR

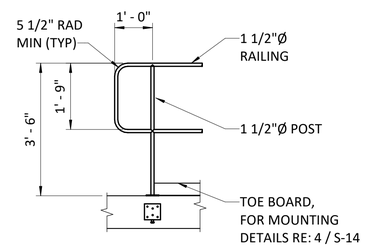

TYPICAL RAILING END

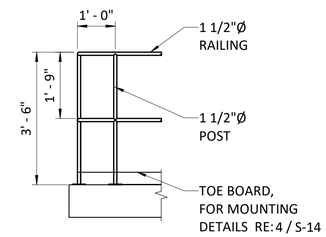

TYPICAL RAILING CORNER

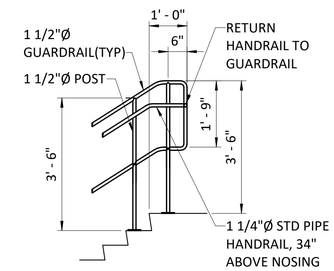

TYPICAL STAIR END

DETAIL NOTES:

1. MAXIMUM POST SPACING IS 5'-0".

3 TYPICAL ALUMINUM RAILING DETAILS
NOT TO SCALE

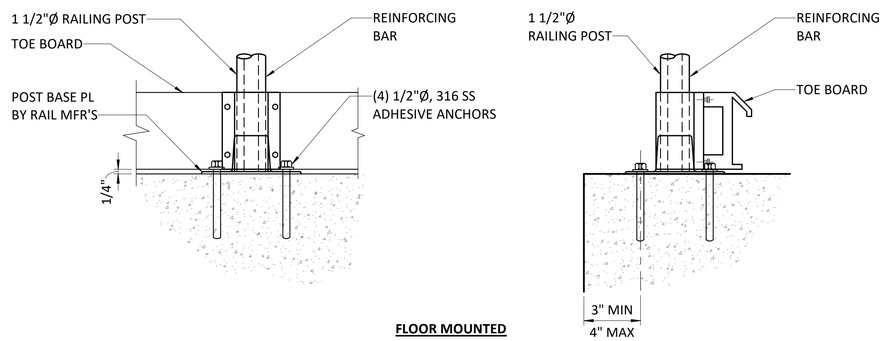

FLOOR MOUNTED

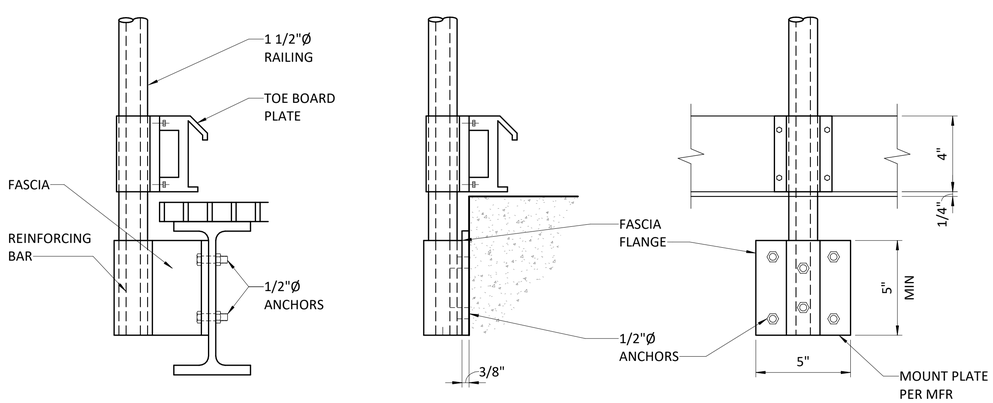

AT BEAM **SIDE MOUNT DETAIL**

DETAIL NOTES:

1. ALL ANCHORS, BOLTS, NUTS, AND CONNECTIONS SHALL BE TYPE 316 STAINLESS STEEL.

4 TYPICAL ALUMINUM RAILING POST MOUNTING DETAILS
NOT TO SCALE

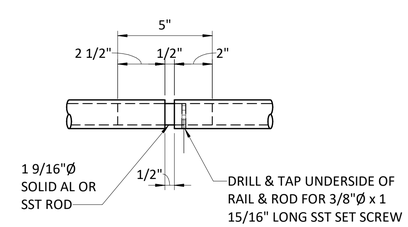

DETAIL NOTES:

1. AT CONTRACTORS'S OPTION, HANDRAIL OR GUARDRAIL MFR STANDARD EXPANSION JOINT DETAIL MAY BE USED WITH WRITTEN APPROVAL IN LIEU OF DETAIL SHOWN.

5 RAIL EXPANSION JOINT
NOT TO SCALE

ISSUED FOR BID

Freese and Nichols, Inc.
Texas Registered Engineering Firm F-2144
STATE OF TEXAS REGISTERED PROFESSIONAL ENGINEER MICHAEL RAY ROBERTSON 59701 01/14/2022
FREESE AND NICHOLS
10497 Town and Country Way, Suite 500
Houston, TX 77024
Phone - (713) 600-6800
Web - www.freese.com

City of Beaumont
COLLIERS RAW WATER PUMP STATION

STRUCTURAL

STANDARD SECTIONS AND DETAILS II

F&N /OP NO.	BMT20326
DATE	01/07/2022
DESIGNED	MRR
DRAWN	JAW
REVISED	
CHECKED	PAB
FILE NAME	ST-BMT20326-PST-R21.rvt

NO.	BY	ISSUE	DATE

VERIFY SCALE 0 1
Bar is one inch on original drawing. If not one inch on this sheet, adjust scale.

SHEET S-14
SEQ. 110

Plot Date: 1/13/2022 9:01:13 AM

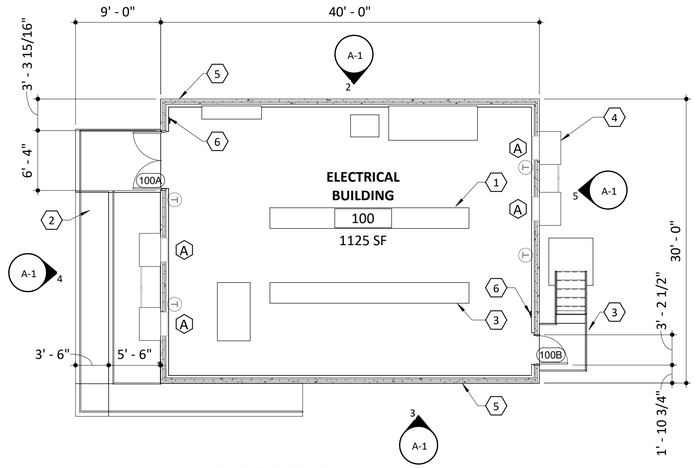

1 FLOOR PLAN
1/8" = 1'-0"

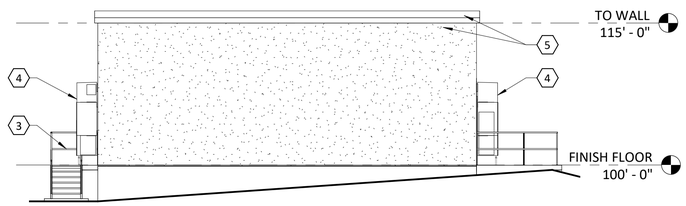

2 A-1 NORTH ELEVATION
1/8" = 1'-0"

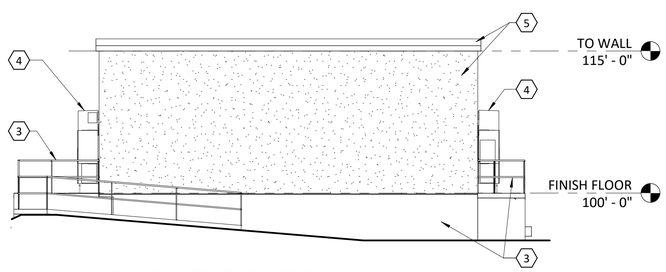

3 A-1 SOUTH ELEVATION
1/8" = 1'-0"

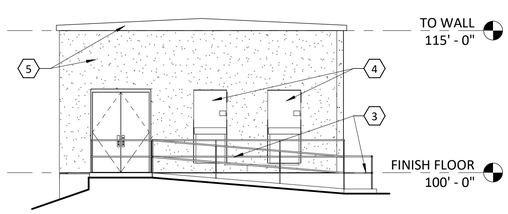

4 A-1 WEST ELEVATION
1/8" = 1'-0"

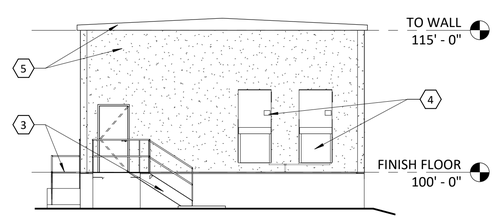

5 A-1 EAST ELEVATION
1/8" = 1'-0"

DOOR & FRAME SCHEDULE

DOOR NO.	SINGLE/ PAIR	DOOR DESCRIPTION SIZE WIDTH	HEIGHT	THICKNESS	MAT	DOOR TYPE	FRAME DESCRIPTION MAT	FRAME TYPE	DOOR DETAILS HEAD	JAMB	SILL	FIRE RATING	COMMENTS
100A	PAIR	6' - 0"	8' - 6"	1 3/4"	HM	A	HM	HM-1	5/A-1	6/A-1	7/A-1	-	1, 2
100B	SINGLE	3' - 0"	7' - 0"	1 3/4"	HM	A	HM	HM-1	5/A-1	6/A-1	7/A-1	-	1, 2

NOTES

1. INSULATED DOOR.
2. PREFINISHED DOOR AND FRAME.

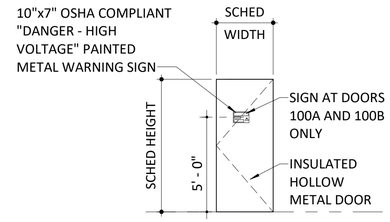

A
HOLLOW METAL DOOR

6 DOOR TYPES
NTS

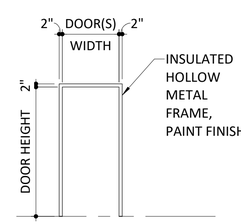

HM-1
HOLLOW METAL

7 FRAME TYPES
NTS

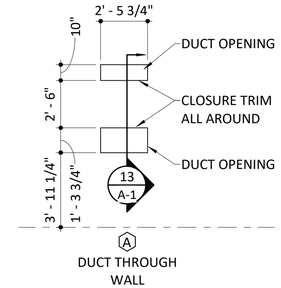

8 WINDOW & OPENING TYPES
NTS

GENERAL NOTES

1. ALL DIMENSIONS ARE GIVEN TO:
   A. FACE OF CONCRETE OR MASONRY.
   B. CENTER LIVE OF COLUMNS WHERE INDICATED.
   C. FACE OF FINISH.
   D. FACE OF PLASTER OR STUCCO.
   E. CONCRETE FLOOR LINE.

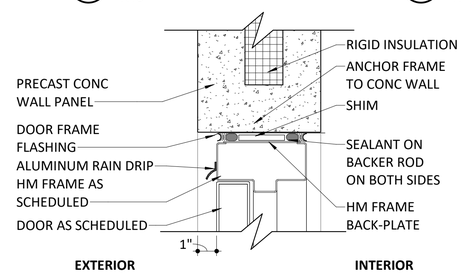

9 DOOR HEAD DETAIL
3" = 1'-0"

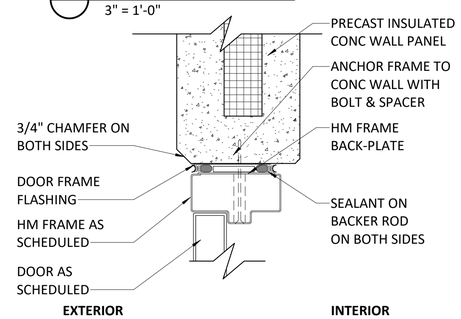

10 DOOR JAMB DETAIL
3" = 1'-0"

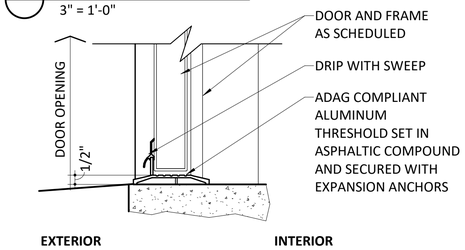

11 DOOR SILL DETAIL
3" = 1'-0"

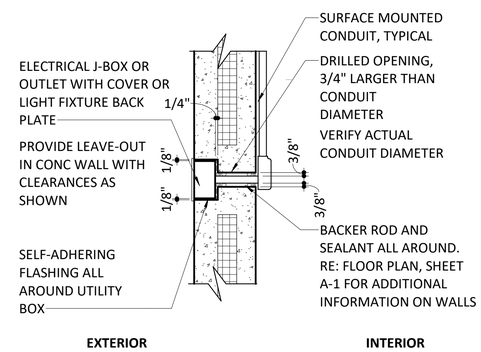

12 WALL PENETRATION DETAIL
1 1/2" = 1'-0"

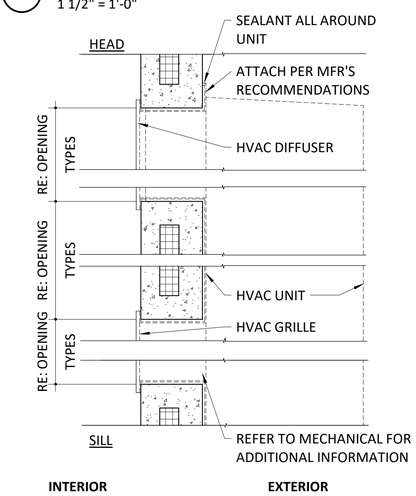

13 DUCT THROUGH WALL
1 1/2" = 1'-0"

NOTES BY SYMBOL " (X) "

1 ELECTRICAL EQUIPMENT, REFER TO E-1 FOR ADDITIONAL INFORMATION
2 REFER TO CIVIL SHEET, C-8 FOR SIDEWALK AND ADDITIONAL INFORMATION
3 REFER TO STRUCTURE SHEET S-9 FOR ADDITIONAL INFORMATION.
4 MECHANICAL EQUIPMENT, REFER TO H-1 FOR ADDITIONAL INFORMATION
5 PREFAB CONCRETE WALLS AND ROOF, REFER TO STRUCTURAL SHEET S-9 FOR ADDITIONAL INFORMATION.
6 FIRE EXTINGUISHER MOUNTED ON WALL BRACKET.

0 4' 8' 16'
1/8"=1'-0"
0 4" 8" 1'
1-1/2"=1'-0"
0 1" 2" 4" 8"
3"=1'-0"

NORTH

ISSUED FOR BID

Freese and Nichols, Inc.
Texas Registered Engineering Firm F- 2144
REGISTERED ARCHITECT KEVIN N. THOMPSON STATE OF TEXAS 29
01/07/2022
FREESE AND NICHOLS
801 Cherry Street, Suite 2800
Fort Worth, TX 76102
Phone - (817) 735-7300
Web - www.freese.com

CITY OF BEAUMONT
COLLIERS RAW WATER PUMP STATION

ARCHITECTURE
ELECTRICAL BUILDING
FLOOR PLAN & DOOR SCHEDULE

NO.	ISSUE	BY	DATE

VERIFY SCALE 0 1
Bar is one inch on original drawing. If not one inch on this sheet, adjust scale.

F&N JOB NO.	BMT20326
DATE	01/07/2022
DESIGNED	AEP
DRAWN	RM
REVISED	.
CHECKED	PKJ
FILE NAME	

SHEET A-1
SEQ. 111

Plot Date: 1/12/2022 10:59:18 AM

GENERAL NOTES

1. THIS PROJECT IS DESIGNED BASED ON THE FOLLOWING CODES: INTERNATIONAL MECHANICAL CODE 2015, INTERNATIONAL ENERGY CONSERVATION CODE 2015, AND ASHRAE 62.1.
2. ALL INFORMATION REQUIRED FOR DESIGN MAY NOT BE COVERED IN THE DRAWINGS. REFER TO DIVISION 23 TECHNICAL SPECIFICATIONS AND OTHER RELATED SECTIONS FOR ADDITIONAL INFORMATION.
3. COORDINATE WITH OTHER UTILITIES TO AVOID INTERFERENCES WHEN INSTALLING DUCTWORK, PIPING AND EQUIPMENT.
4. FURNISH AND INSTALL ALL EQUIPMENT AS PER MANUFACTURER'S RECOMMENDATIONS AND INSTRUCTIONS. PROVIDE MODIFICATIONS AND ACCESSORIES AS REQUIRED AND RECOMMENDED BY THE MANUFACTURER TO ASSURE PROPER OPERATION OF THE EQUIPMENT.
5. VERIFY DIMENSIONS, LOCATIONS, ELEVATIONS AND CONFIGURATION OF ALL ITEMS ASSOCIATED WITH THE INSTALLATION OF DUCTWORK AND EQUIPMENT.
6. EQUIPMENT, DUCTWORK AND PIPING SHALL NOT BE SUPPORTED OR SECURED TO OTHER EQUIPMENT, DUCTWORK, PIPING OR OTHER UTILITIES.
7. ALL AIR MOVING EQUIPMENT CONTAINING PARTICULATE FILTERS SHALL NOT BE OPERATED WITHOUT PARTICULATE FILTERS IN PLACE.
8. MAINTAIN A VERTICAL SLOPE OF 1/8" PER FOOT IN THE DIRECTION OF FLOW FOR ALL HORIZONTAL CONDENSATE PIPING.
9. INSTALL THERMOSTATS AT 48" AFF.

MISCELLANEOUS

⬡ →	DRAWING NOTE REFERENCE
∅	DIAMETER/PHASE
(T)	THERMOSTAT (LOCAL CONTROL "X" INDICATES ZONE)

PIPING SYMBOLS

—⊢○	ELBOW DOWN

EQUIPMENT DESIGNATIONS

WP	PACKAGED DX A/C WALL-PACK UNIT

NOTES BY SYMBOL "⬡"

1. PROVIDE NEW WALL PACK A/C UNIT AS SCHEDULED.
2. ROUTE CONDENSATE PIPING FROM BOTH WP-3 AND WP-4 TOGETHER AND DROP DOWN TO 3' BELOW CONCRETE. TURN AND SLOPE DOWN TO GRADE. REFER TO 5/H-1 ON THIS SHEET FOR SECTION VIEW.
3. PROVIDE FULL SIZE CONDENSATE DRAIN AND P-TRAP. TERMINATE OPEN-SITE ON GRADE AT CENTER OF 12" DIA. X 36" DEEP PEA GRAVEL-FILLED DRY WELL SUMP LOCATED 3' FROM RETAINING WALL. DO NOT TERMINATE CONDENSATE DRAIN ON PAVEMENT OR CONCRETE SURFACES. REFER TO 2/H-1 AND 4/H-1.

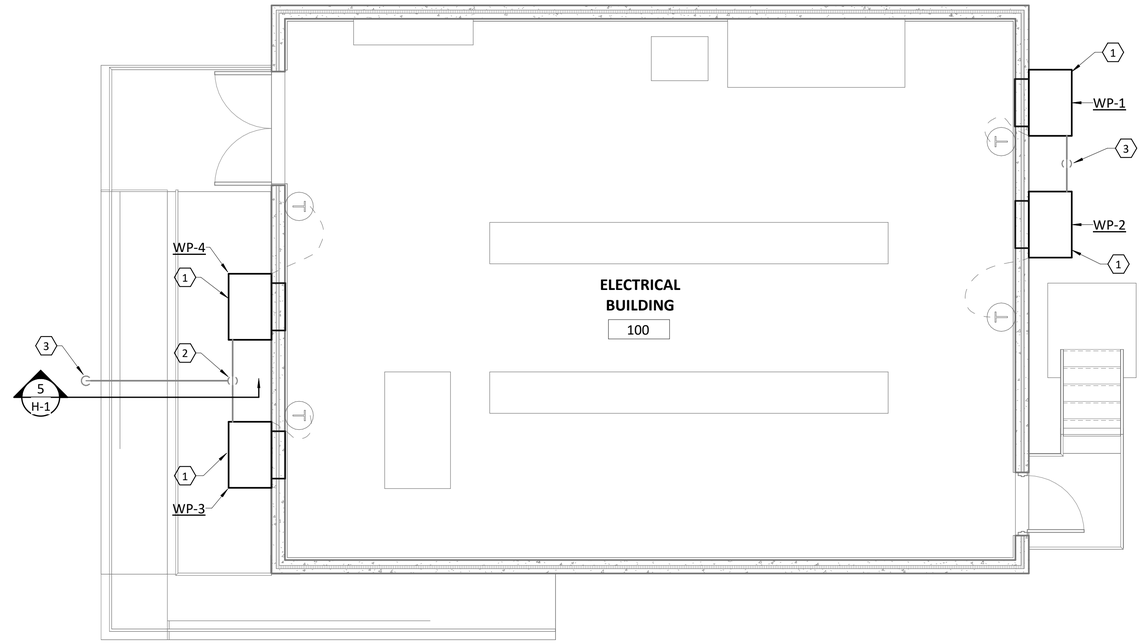

1 HVAC FLOOR PLAN
1/4" = 1'-0"

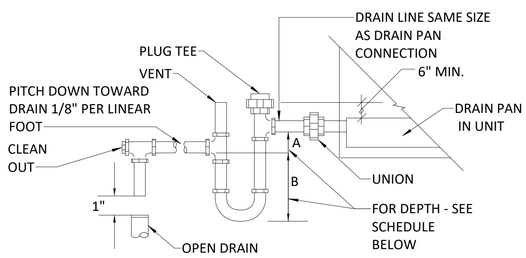

UNIT TYPE	A	B
DRAW-THRU	1" MIN.	1.5X
BLOW-THRU	1" MIN.	2.0X

WHERE X = SCHEDULED FAN STATIC PRESS.

NOTES:
1. TYPICAL P-TRAP DETAIL APPLIES ONLY TO NON-PUMPED CONDENSATE SYSTEMS.

2 TYPICAL A/C CONDENSATE PIPING
NOT TO SCALE

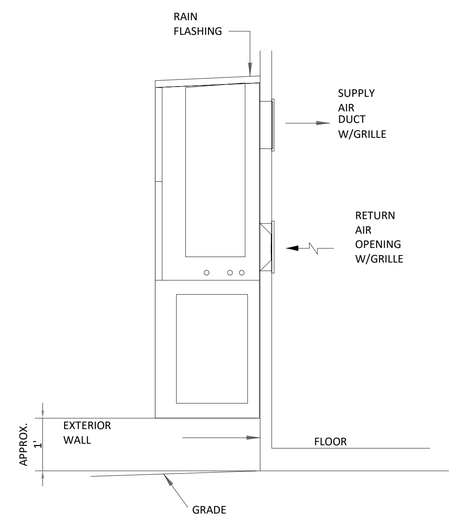

3 PACKAGED DX WALL-PACK UNIT SECTION
NOT TO SCALE

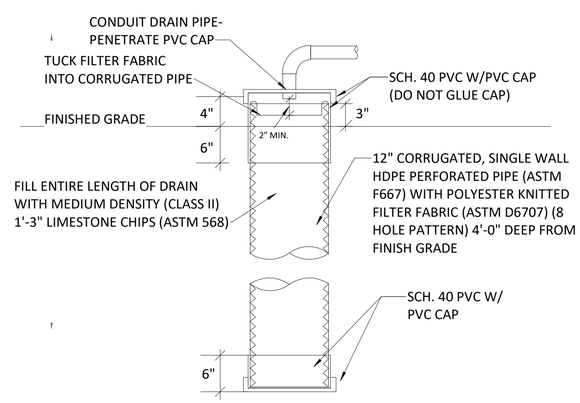

4 CONDENSATE DRAIN - EXTERIOR DRAIN DETAIL
NOT TO SCALE

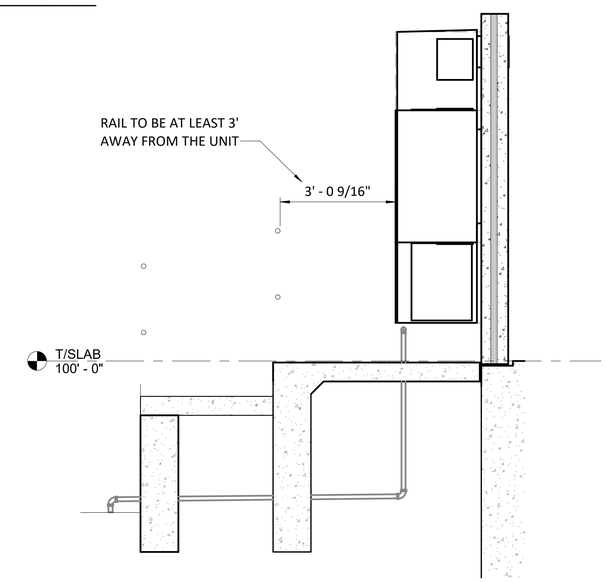

5 CONDENSATE SECTION VIEW
H-1 1/2" = 1'-0"

PACKAGED DX A/C WALL-PACK UNIT SCHEDULE																
		AIR FLOW				COOLING					UNIT ELECTRICAL					
MARK	NOM SIZE (TONS)	SUPPLY (CFM)	OUTSIDE (CFM)	EXT S.P. (IN WG)	SUPPLY FAN HP	TOTAL CAP (MBH)	SENS CAP. (MBH)	EAT DB/WB (°F)	AMBIENT AIR (°F)	COND. FAN HP	VOLTAGE	PHASE	MCA	MOCP	MANUFACTURER/MODEL	NOTES
WP-1,2,3,4	6	1900	25	0.25	3/4	71.0	49.9	80/67	95	1/2	460 V	3	18 A	25 A	BARD/W72AC-C0ZZPZZ3E	1,2,3,4,5,6,7

NOTES:
1. PROVIDE WITH WALL MOUNTED THERMOSTAT. SETPOINT 80°F COOLING (ADJ.)
2. PROVIDE WITH WALL SUPPLY AND RETURN GRILLES.
3. PROVIDE WITH WALL SLEEVES.
4. PROVIDE WITH 2" THICK, MERV 8 WASHABLE FILTERS.
5. PROVIDE WITH ENTHALPY CONTROLLED ECONOMIZER AND ALL CONTROLS AND ACCESSORIES FOR ECONOMIZER OPERATION.
6. PROVIDE WITH LOW AMBIENT CONTROL FOR OPERATION DOWN TO 20°F.
7. DISCONNECT SWITCH SHOWN ON ELECTRICAL SHEETS.

0 1' 2' 4'
1/2"=1'-0"
0 2' 4' 8'
1/4"=1'-0"

ISSUED FOR BID

Freese and Nichols, Inc.
Texas Registered Engineering Firm F- 2144
STATE OF TEXAS
VAN CASHEN
185595
LICENSED PROFESSIONAL ENGINEER
01/07/2022

FREESE AND NICHOLS
10497 Town and Country Way,
Suite 500
Houston, TX 77024
Phone - (713) 600-6800
Web - www.freese.com

City of Beaumont
COLLIERS RAW WATER PUMP STATION

MECHANICAL
ELECTRICAL BUILDING
HVAC FLOOR PLAN

F&N /JOB NO.	BMT20326
DATE	01/07/22
DESIGNED	EMH
DRAWN	EMH
REVISED	-
CHECKED	VMC
FILE NAME	HV-BMT20326-ELB-R21

NO.	ISSUE	BY	DATE

VERIFY SCALE 0 1
Bar is one inch on original drawing. If not one inch on this sheet, adjust scale.

SHEET
H-1
SEQ.
112

Plot Date: 1/7/2022 9:03:15 AM

ABBREVIATIONS

AC	ALTERNATING CURRENT
AF	AMP FRAME
AFD	ADJUSTABLE FREQUENCY DRIVE
AFF	ABOVE FINISHED FLOOR OR GRADE
AG	ABOVE GRADE
AGSB	ABOVE GROUND SPLICE BOX
AIC	AMPERES INTERRUPTING CAPACITY
AL OR ALUM	ALUMINUM
AMP OR A	AMPERE
AT	AMP TRIP
ATS	AUTOMATIC TRANSFER SWITCH
AUTO	AUTOMATIC
AUX	AUXILIARY
AWG	AMERICAN WIRE GAUGE
C.	CONDUIT
CB	CIRCUIT BREAKER
C/C	CENTER TO CENTER
CHH	COMMUNICATION MANHOLE/HANDHOLE
CKT	CIRCUIT
CLF	CURRENT LIMITING FUSE
CONT.	CONTINUATION
CP	CONTROL PANEL
CPT	CONTROL POWER TRANSFORMER
CR	CONTROL RELAY
CS	CONTROL SWITCH OR COMBINATION STARTER
CT	CURRENT TRANSFORMER
CU	COPPER
DC	DIRECT CURRENT
DI	DOOR INTERLOCK
DIA	DIAMETER
DN	DOWN
DP	DIFFERENTIAL PRESSURE
DWG	DRAWING
EC	EMPTY CONDUIT
EHH	ELECTRICAL MANHOLE
ELEC	ELECTRICAL
ELEV	ELEVATION
EM	EMERGENCY
EMH	ELECTRICAL MANHOLE/HANDHOLE
EO	ELECTRICALLY OPERATED
ETM	ELAPSED TIME METER
EUC	ELECTRIC UTILITY CO.
EXIST.	EXISTING
FBO	FURNISHED BY OTHERS
FO	FIBER OPTIC
FRP	FIBERGLASS REINFORCED POLYESTER
FT	FEET
FU	FUSE
G. OR GRND	GROUND
GA.	GAUGE
GCP	GENERATOR CONTROL PANEL
GEN	GENERATOR
GFI	GROUND FAULT INTERRUPTER
GFS	GROUND FAULT SENSING
GO	GATE OPERATOR
GRS	GALVANIZED RIGID STEEL
HH	HANDHOLE
HP	HORSEPOWER
HT	HEIGHT
HTP	HEAT TRACE PANEL
HTR	HEATER
HZ	HERTZ
ID	INTERNAL DIAMETER
IMH	INSTRUMENT MANHOLE
INST	INSTRUMENT
IRP	INTERPOSING RELAY PANEL
JB	JUNCTION BOX
KAIC	KILO AMPERE INTERRUPTING CAPACITY
KVA	KILOVOLT-AMPERE
KW	KILOWATT
LA	LIGHTNING ARRESTER
LC	LIGHTNING CONTACTOR
LED	LIGHT EMITTING DIODE
LP	LIGHTING PANEL
LSI	LONG, SHORT, INSTANTANEOUS
LSIG	LONG, SHORT, INSTANTANEOUS, GROUND
LTG/LTNG	LIGHTS/LIGHTING
MBFV	MOTOR OPERATED BUTTERFLY VALVE
MCB	MAIN CIRCUIT BREAKER
MCC	MOTOR CONTROL CENTER
MCP	MOTOR CIRCUIT PROTECTOR
MFR	MANUFACTURER
MFR'S	MANUFACTURER'S
MH	MANHOLE
ML	MULTILIN
MLO	MAIN LUGS ONLY
MOV	MOTOR OPERATED VALVE
MPR	MOTOR PROTECTION RELAY
MR	MULTIRATIO
MTD	MOUNTED
MTG	MOUNTING
MTS	MANUAL TRANSFER SWITCH

ABBREVIATIONS

NC or N.C.	NORMALLY CLOSED
NF	NON-FUSED
NO or N.O.	NORMALLY OPEN OR NUMBER
NO.	NUMBER
OD	OUTSIDE DIAMETER
OHE	OVERHEAD ELECTRIC
OL	OVERLOAD
OLX	OVERLOAD CONTROL RELAY
P	POLE
PB	PULL BOX OR PUSH BUTTON
PC	PHOTOCELL
PCC	PUMP CONTROL CONSOLE
PFCC	POWER FACTOR CORRECTION CAPACITOR
PFR	PHASE FAILURE RELAY
PH	PHASE
PL.	PLATE
PLC	PROGRAMMABLE LOGIC CONTROLLER
PoE	POWER OVER ETHERNET
PPR	PHASE PROTECTIVE RELAY
PQM	POWER QUALITY METER
PR.	PAIR OR PAIR CABLE
PT	POTENTIAL TRANSFORMER
PTT	PUSH TO TEST TYPE
PVC	POLYVINYL CHLORIDE
QTY	QUANTITY
RC	REMOTE CONTROL
RCP	RELAY CONTROL PANEL
REC.	CIRCUIT RECLOSURE
RECP	RECEPTACLES
REQ'D	REQUIRED
RTD	RESISTANCE TEMPERATURE DETECTOR
RTU	REMOTE TERMINAL UNIT
SC	SURGE CAPACITOR
SCH	SCHEMATIC
SCTB	SHORT CIRCUIT TERMINAL BLOCK
SEC	SECONDS OR SECONDARY
SHLD. OR SH	SHIELD OR SHIELDED
SHT	SHEET
SN OR S/N	SOLID NEUTRAL
SPD	SURGE PROTECTION DEVICES
SSRVS	SOLID-STATE REDUCED VOLTAGE STARTER
SS	STAINLESS STEEL
ST	STARTER
STA.	STATION
STC	SIGNAL TERMINATION CABINET
SV	SOLENOID VALVE
SW	SWITCH
SWGR	SWITCHGEAR
Sz#	MOTOR STARTER WITH SIZE
TC	TERMINATION CABINET OR TRAY CABLE
TEL	TELEPHONE
TO	TIME DELAY ON OPENING
TR.	TRIAD
TS	TEMPERATURE SWITCH
TW	TWISTED
TYP	TYPICAL
UG	UNDERGROUND
UPS	UNINTERRUPTIBLE POWER SUPPLY
UTP	UNSHIELDED TWISTED PAIR CABLE
V	VOLTS
VAR.	VARIABLE
VFD	VARIABLE FREQUENCY DRIVE
VFI	VACUUM FAULT INTERUPTER
VO	VALVE OPERATOR
W	WITH, WIRE OR WATT
WP	WEATHERPROOF
WR	WEATHER RESISTANT
XFMR	TRANSFORMER
XMTR	TRANSMITTER
XP	EXPLOSION PROOF

NOTE:
THIS IS A STANDARD LEGEND. THEREFORE, NOT ALL OF THIS INFORMATION MAY BE USED ON THIS PROJECT.

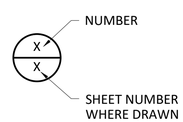

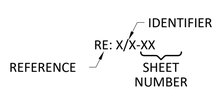

PLAN SYMBOL	DESCRIPTION
b A	LIGHTING FIXTURE "A" - FIXTURE TYPE "b" - SWITCH NUMBER
A	EMERGENCY BATTERY PACK LIGHT FIXTURE "A" - FIXTURE TYPE
X	CEILING MOUNTED EXIT SIGN "X" - FIXTURE TYPE
X	WALL MOUNTED EXIT SIGN ARROW INDICATES DIRECTION OF EGRESS "X" - FIXTURE TYPE
FACP	FIRE ALARM CONTROL PANEL
F	MANUAL PULL STATION
	CEILING MOUNTED STROBE
	WALL MOUNTED STROBE
	SMOKE DETECTOR
	HEAT DETECTOR
	HORN
	COMBINATION STROBE/HORN
	CONDUIT, EXPOSED/SURFACE MOUNTED
	CONDUIT OR DUCT BANK, CONCEALED
	CONDUIT, EXPOSED/SURFACE MOUNTED, TURNING UP
	CONDUIT, EXPOSED/SURFACE MOUNTED, TURNING DOWN
	CONDUIT STUBBED OUT AND CAPPED
OHE	OVERHEAD ELECTRIC LINE
UGE	UNDERGROUND ELECTRIC LINE
OHP	OVERHEAD PRIMARY LINE
UGP	UNDERGROUND PRIMARY LINE
OHS	OVERHEAD SECONDARY LINE
UGS	UNDERGROUND SECONDARY LINE
OHC	OVERHEAD COMMUNICATION LINE
UGC	UNDERGROUND COMMUNICATION LINE
OHFO	OVERHEAD FIBER OPTIC LINE
UGFO	UNDERGROUND FIBER OPTIC LINE
	FLEXIBLE METAL CONDUIT
	HEAT TRACE
2 (3 #3/0, #2G., 3"C.)	DENOTES A QUANTITY OF TWO (2) 3" CONDUITS EACH CONTAINING THREE (3) NO. 3/0 AWG CONDUCTORS AND ONE (1) NO.2 AWG GROUND CONDUCTOR
2-2/C#16	DENOTES A QUANTITY OF TWO (2) INSTRUMENT CABLES. EACH CONSISTS OF TWO (2) NO.16 AWG CONDUCTORS
3-4"C.	THREE (3) 4" CONDUITS
MC1-XXX 4 #14, #14G., 3/4"C. (2 #14 SPARE)	CABLE TAG FOUR (4) #14 CONTROL OR POWER CONDUCTORS, ONE (1) #14 GROUND CONDUCTOR. ALL CONDUCTORS IN A 3/4" CONDUIT. TWO (2) OF THE FOUR (4) #14 CONTROL OR POWER CONDUCTORS ARE SPARE
LA-1,3	HOMERUN, CIRCUITS 1 AND 3 RUN TO PANEL "LA" 2 #12, #12G., 3/4"C. UNLESS NOTED OTHERWISE
$b	SINGLE POLE SWITCH "b" - INDICATES SWITCH LEG SHALL CONTROL LIGHT FIXTURES WITH "b" - DESIGNATION
$Xc	MULTI POLE SWITCH "x" - INDICATES NUMBER OF POLE "c" - INDICATES SWITCH SHALL CONTROL LIGHT FIXTURES WITH "c" DESIGNATION
$M	MANUAL MOTOR STARTER /DISCONNECT
$3	3 WAY SWITCH
$4	4 WAY SWITCH
$D D	DIMMER LIGHTING CONTROL SWITCH
$TM TM	TIME SWITCH
	DUPLEX RECEPTACLE, 20A, 120V, 2P, 3W "C" - MOUNTED ABOVE COUNTERTOP "GFI" OR "GF" - GROUND FAULT INTERRUPTER TYPE "WP" - WEATHERPROOF
F	FLOOR MOUNTED RECEPTACLE
	SIMPLEX RECEPTACLE, GROUNDED TYPE
	SPECIAL RECEPTACLE
	QUADPLEX RECEPTACLE

PLAN SYMBOL	DESCRIPTION
J J	JUNCTION BOX
PB	PULL BOX
TC	TERMINAL CABINET
OS	OCCUPANCY SENSOR
PC	PHOTOCELL
PW	PREWIRED
MH	MANHOLE
M	UTILITY METER
M	MOTORIZED LOUVER
DAMP	INDICATES THAT ALL ELECTRICAL EQUIPMENT AND MATERIALS INSTALLED WITHIN THE ROOM OR AREA IN WHICH THIS NOTATION APPEARS SHALL BE OF NEMA 12 CONSTRUCTION UNLESS OTHERWISE NOTED
WET	INDICATES THAT ALL ELECTRICAL EQUIPMENT AND MATERIALS INSTALLED WITHIN THE ROOM OR AREA IN WHICH THIS NOTATION APPEARS SHALL BE OF NEMA 4 CONSTRUCTION UNLESS OTHERWISE NOTED
CORROSIVE	INDICATES THAT ALL ELECTRICAL EQUIPMENT AND MATERIALS INSTALLED WITHIN THE ROOM OR AREA IN WHICH THIS NOTATION APPEARS SHALL BE OF NEMA 4X CONSTRUCTION UNLESS OTHERWISE NOTED
CLASS I, DIV.1, GROUP D	INDICATES THAT ALL ELECTRICAL EQUIPMENT AND MATERIALS INSTALLED WITHIN THE ROOM OR AREA IN WHICH THIS NOTATION APPEARS SHALL CONFORM TO N.E.C REQUIREMENTS FOR THE HAZARDOUS AREA CLASSIFICATION SHOWN

ONE-LINE OR CONTROL DIAGRAM	PLAN	DESCRIPTION
	OR	PANEL
5	M	MOTOR, NUMBER DESIGNATES HORSEPOWER
VM *	-	VOLTMETER (WITH SWITCH IF 3-PHASE)
AM *	-	AMMETER (WITH SWITCH IF 3-PHASE)
*	-	METER * WM - WATTMETER WHM - WATTHOUR METER WHDM - WATTHOUR DEMAND METER WHDR - WATTHOUR DEMAND RECORDER PF - POWER FACTOR METER ETM - ELAPSED TIME METER TRANSDUCER AX - CURRENT TRANSDUCER WX - WATT TRANSDUCER
#	-	RELAY, NO. AS INDICATED 25 - SYNCHRONISM CHECK RELAY 27 - UNDER VOLTAGE RELAY 38 - BEARING PROTECTIVE DEVICE 40 - LOSS OF EXCITATION RELAY 42 - RUNNING CONTACTOR/PILOT RELAY 46 - REVERSE PHASE/PHASE BALANCE/CURRENT RELAY 47 - PHASE SEQUENCE VOLTAGE RELAY 48 - MACHINE OR TRANSFORMER THERMAL RELAY 50 - INSTANTANEOUS OVERCURRENT RELAY 50G - INSTANTANEOUS GROUND 51 - TIME OVER CURRENT RELAY, GROUNDING RESISTOR TYPE 51N - TIME OVERCURRENT RELAY, RESIDUAL TYPE 51V - TIME OVERCURRENT RELAY WITH VOLTAGE RESTRAINT 59 - OVER VOLTAGE RELAY 60 - NEGATIVE SEQUENCE VOLTAGE RELAY 62 - TIME DELAY RELAY 63 - OVER PRESSURE RELAY 67 - AC DIRECTIONAL OVERCURRENT RELAY 83 - AUTOMATIC SELECTIVE CONTROL OR TRANSFER RELAY 86 - LOCKING-OUT RELAY 87 - DIFFERENTIAL PROTECTIVE RELAY B - SUFFIX INDICATES "BUS" G - SUFFIX INDICATES "GENERATOR" GF - GROUND FAULT IR - INTERPOSING RELAY PFR - PHASE FAILURE, PHASE REVERSAL, UNDERVOLTAGE, OVERVOLTAGE RELAY ST - SHUNT TRIP T - SUFFIX INDICATES "TRANSFORMER" TRP CAP - CAPACITOR TRIP X - SUFFIX INDICATES "AUXILIARY"

ISSUED FOR BID

Freese and Nichols, Inc.
Texas Registered Engineering Firm F-2144

STATE OF TEXAS
REBECCA SANDOVAL
102369
LICENSED
PROFESSIONAL ENGINEER
01/26/2022

FREESE AND NICHOLS
10497 Town and Country Way,
Suite 600
Houston, Texas 77024
Phone - (713) 600-6800
Web - www.freese.com

CITY OF BEAUMONT
COLLIER'S FERRY PUMP STATION
ELECTRICAL
LEGEND I

NO.	ISSUE	BY	DATE

F&N JOB NO.	BMT20326
DATE	01/07/2022
DESIGNED	DJD
DRAWN	JTR
REVISED	-
CHECKED	JNH
FILE NAME	EL-ALL-GN-LGND01.dwg

VERIFY SCALE 0 1 Bar is one inch on original drawing. If not one inch on this sheet, adjust scale.

SHEET E-1
SEQ. 113

ONE-LINE OR CONTROL DIAGRAM	PLAN	DESCRIPTION
CR#	-	AC INDUSTRIAL CONTROL RELAY COIL, # - NUMBER AS INDICATED
M#	-	MOTOR STARTER COIL, # - NUMBER AS INDICATED
✳	-	SPECIAL CAPACITOR ✳SC - SURGE CAPACITOR PF - POWER FACTOR CORRECTION CAPACITOR
	-	PUSH BUTTON, MOMENTARY CONTACT, SPRING RETURN, NORMALLY CLOSED
	-	PUSH BUTTON, MOMENTARY CONTACT, SPRING RETURN, NORMALLY OPEN
	-	EMERGENCY STOP PUSH BUTTON WITH RED MUSHROOM HEAD OPERATOR (MAINTAINED CONTACT)
OFF ON	-	OFF/ON SELECTOR SWITCH
B A C X00 00X	-	3 POSITION SELECTOR SWITCH, MAINTAINED CONTACT O-OPEN X-CLOSED (A/B/C) HOA - HAND/OFF/AUTO HOR - HAND/OFF/REMOTE LOR - LOCAL/OFF/REMOTE OCS - OPEN/CLOSE/STOP OOA - ON/OFF/AUTO NOTE: 2 POSITION MULTI-CONTACT SWITCH FOLLOWS SAME CONVENTION
PTT ✳	-	INDICATING LAMP, COLOR INDICATED ✳R - RED G - GREEN B - BLUE W - WHITE A - AMBER O - ORANGE PTT - PUSH TO TEST
52	-	MEDIUM VOLTAGE DRAWOUT TYPE POWER CIRCUIT BREAKER
AF AT A P	CB	LOW VOLTAGE CIRCUIT BREAKER, 3 POLE UNLESS OTHERWISE NOTED A - AMP TRIP, P - POLES
MCP		MOTOR CIRCUIT PROTECTOR
MCP ✳ Sz#		COMBINATION MOTOR CIRCUIT PROTECTOR AND MAGNETIC MOTOR STARTER, FULL VOLTAGE NON-REVERSING UNLESS OTHERWISE NOTED: ✳FVR - FULL VOLTAGE REVERSING FVNR - FULL VOLTAGE, NON REVERSING RVNR - REDUCED VOLTAGE NON-REVERSING 2S1W - TWO SPEED, ONE WINDING 2S2W - TWO SPEED, TWO WINDING Sz# - NEMA SIZE OF STARTER
✳		NON-FUSIBLE DISCONNECT SWITCH, 600 VOLT, 3 POLE ✳AMPERE RATING NOTED
✳ ✱		FUSIBLE DISCONNECT SWITCH, 600 VOLT, 3 POLE, AMPERE RATING AND FUSE SIZE AS NOTED ✳AMPERE RATING NOTED ✱FUSE RATING
	-	DRAWOUT TYPE EQUIPMENT OR DEVICE
	-	MEDIUM VOLTAGE CABLE TERMINATION
	-	MEDIUM VOLTAGE AIR INTERRUPTER SWITCH
	-	MEDIUM VOLTAGE FUSED AIR INTERRUPTER SWITCH
	-	MEDIUM VOLTAGE FUSED MOTOR CONTROLLER FUSED CONTACTOR DRAWOUT TYPE
VAC	-	VACUUM CONTACTOR
	-	SPEED POTENTIOMETER

ONE-LINE OR CONTROL DIAGRAM	PLAN	DESCRIPTION
TR#	-	TIMING RELAY RANGE AS NOTED, SET POINT AS NOTED #-NUMBER AS INDICATED TDD-TIME DELAY AFTER DE-ENERGIZATION-OFF DELAY TDE-TIME DELAY AFTER ENERGIZATION-ON DELAY NOTC-NORMALLY OPEN, TIMED CLOSING WHEN ENERGIZED NCTO-NORMALLY CLOSED, TIMED OPENING WHEN ENERGIZED NOTO-NORMALLY OPEN, TIMED OPENING WHEN DE-ENERGIZED NCTC-NORMALLY CLOSED, TIMED CLOSING WHEN DE-ENERGIZED
✳ -##	✳ -##	FIELD INSTRUMENT, TAG NO. OR LOOP NO. AS INDICATED ✳ - INDICATES INSTRUMENT TYPE DEFINED ON LOOP SHEETS ## - INDICATES LOOP NO.
	OR ⊗	LIQUID LEVEL (FLOAT) SWITCH NORMALLY CLOSED, OPENS ON FALLING LEVEL NORMALLY OPEN, CLOSES ON FALLING LEVEL NORMALLY CLOSED, OPENS ON RISING LEVEL NORMALLY OPEN, CLOSES ON RISING LEVEL
	PS OR ⊗	PRESSURE OR VACUUM SWITCH NORMALLY OPEN, CLOSES ON RISING PRESSURE NORMALLY CLOSED, OPENS ON RISING PRESSURE NORMALLY OPEN, CLOSES ON DROPPING PRESSURE NORMALLY CLOSED, OPENS ON DROPPING PRESSURE
	T OR TS OR ⊗	TEMPERATURE SWITCH OR THERMOSTAT NORMALLY OPEN, CLOSES ON RISING TEMPERATURE NORMALLY OPEN, CLOSES ON DROPPING TEMPERATURE NORMALLY CLOSED, OPENS ON RISING TEMPERATURE NORMALLY CLOSED, OPENS ON DROPPING TEMPERATURE
	FS OR ⊗	FLOW SWITCH (AIR, WATER, ETC.) NORMALLY OPEN, CLOSES ON INCREASED FLOW NORMALLY CLOSED, OPENS ON INCREASED FLOW
	ZS OR ⊗	POSITION (LIMIT) SWITCH NORMALLY OPEN NORMALLY OPEN - HELD CLOSED NORMALLY CLOSED NORMALLY CLOSED - HELD OPEN
	TQ OR ⊗	TORQUE SWITCH NORMALLY CLOSED, OPENS ON HIGH TORQUE
	T	TRANSFORMER, RATINGS AND CONNECTIONS AS NOTED
#CT'S A	-	CURRENT TRANSFORMER # - QUANTITY A - RATIO
#PT'S	-	POTENTIAL TRANSFORMER # - QUANTITY
#CT'S A	-	GROUND CURRENT SENSOR TRANSFORMER # - QUANTITY A - RATIO
	-	CONTROL TRANSFORMER
	-	CONTROL POWER TRANSFORMER
G	-	GENERATOR, RATINGS AND CONNECTIONS AS NOTED
#A ATS-1 N S	-	TRANSFER SWITCH ATS - AUTOMATIC TRANSFER SWITCH MTS - MANUAL TRANSFER SWITCH "N" - INDICATES NORMAL SOURCE "S" - INDICATES STANDBY SOURCE #A - INDICATES CONTINUOUS CURRENT RATING
	-	MOTOR OVERLOAD OVERLOAD RELAY HEATER

SYMBOL	DESCRIPTION
▽	DATA
▼	TELEPHONE
▼	COMBINATION TELEPHONE/DATA
	FLOOR MOUNTED DATA OUTLET
	FLOOR MOUNTED TELEPHONE OUTLET
	POKE-THRU DEVICE COMBINATION POWER/DATA/VOICE OUTLET
	FLOOR COMBINATION POWER/DATA/VOICE OUTLET
	CATV
✳	SECURITY CAMERA ✳F - FIXED Z - PAN/TILT/ZOOM
##	SECURITY DEVICE SEC - SECURITY PANEL MAG - MAGNETIC LOCK CR - CARD READERS DR - REMOTE DOOR RELEASE MD - MOTION DETECTOR SK - SECURITY KEYPAD ES - ELECTRIC STRIKE DS - DOOR SWITCH IC - INTERCOM STATION SB - SECURITY PANIC BUTTON

NOTE:
THIS IS A STANDARD LEGEND. THEREFORE, NOT ALL OF THIS INFORMATION MAY BE USED ON THIS PROJECT.

ONE-LINE OR CONTROL DIAGRAM	PLAN	DESCRIPTION
	-	CONDUCTORS OR CONDUITS CROSSING PATHS BUT NOT CONNECTED
	-	CONDUCTORS ELECTRICALLY CONNECTED
	-	INDICATES LIMITS OF EQUIPMENT OR WIRING ENCLOSURE
LA	-	LIGHTNING ARRESTER
	G 	GROUND ROD GROUND ROD TEST WELL
30A	-	FUSE, AMPERE RATING AS NOTED
	-	HEATER
	-	INDUCTOR
	-	CONTACT, NORMALLY OPEN (NO)
	-	CONTACT, NORMALLY CLOSED (NC)
OL	-	OVERLOAD CONTACT
OR K #	-	KIRK KEY INTERLOCK
	-	MECHANICAL INTERLOCK
	-	TERMINAL
	-	NODE
TB	-	TERMINAL OR TEST BLOCK
OR	-	PUSH BUTTON STATION, REFER TO ELECTRICAL SCHEMATIC FOR NUMBER OF DEVICES.
	-	LOCATED AT SCADA RTU
	-	LOCATED REMOTE
	-	LOCATED AT MOTOR
	-	FUSED SWITCH/FUSED CUTOUT
M	M	UTILITY METER

ISSUED FOR BID

Freese and Nichols, Inc.
Texas Registered Engineering Firm F-2144

STATE OF TEXAS
REBECCA SANDOVAL
102369
LICENSED
PROFESSIONAL ENGINEER
01/26/2022

FREESE AND NICHOLS
10497 Town and Country Way,
Suite 600
Houston, Texas 77024
Phone - (713) 600-6800
Web - www.freese.com

CITY OF BEAUMONT
COLLIER'S FERRY PUMP STATION

ELECTRICAL

LEGEND II

F&N JOB NO.	BMT20326
DATE	01/07/2022
DESIGNED	DJD
DRAWN	JTR
REVISED	-
CHECKED	JNH
FILE NAME	EL-ALL-GN-LGND02.dwg

NO.	ISSUE	BY	DATE

VERIFY SCALE 0 1
Bar is one inch on original drawing. If not one inch on this sheet, adjust scale.

SHEET E-2
SEQ. 114

GENERAL NOTES:

1. COORDINATE WITH ENTERGY TEXAS, INC. FOR NEW SITE ELECTRICAL SERVICE. ENTERGY CONTACT RICKY JUDALET, PH: (409)785-2268.
2. ALL EQUIPMENT SHOWN DARK TO BE PROVIDED UNDER THIS CONTRACT. ALL EQUIPMENT SHOWN LIGHT IS EXISTING AS INDICATED.
3. THE CONTRACTOR SHALL BE RESPONSIBLE FOR PROVIDING AND SIZING JUNCTION BOXES, PULL BOXES, AND MANHOLES PER THE NATIONAL ELECTRICAL CODE.
4. CAP AND PROVIDE A PULL STRING IN SPARE CONDUIT.
5. POWER, COMMUNICATION, DISCRETE SIGNAL AND ANALOG CONDUCTORS TO BE ROUTED IN SEPARATE CONDUITS. COMMUNICATION CABLE TO BE A MINIMUM OF 6" FROM POWER CONDUCTOR CONDUITS IF RUN IN THE SAME DUCT BANK.
6. CONTRACTOR SHALL PAY ALL COSTS/FEES ASSOCIATED WITH ESTABLISHING NEW 480V SERVICE TO THE ELECTRICAL BUILDING. COSTS MAY INCLUDE BUT ARE NOT LIMITED TO NEW SERVICE TRANSFORMER, METER/METER ENCLOSURE, GROUNDING, MODIFICATION TO EXISTING UTILITIES AND RELATED WORK.

NOTES BY SYMBOL "⬡"

1. COORDINATE WITH THE ELECTRIC UTILITY TO PROVIDE 480Y/277V SECONDARY TRANSFORMER WITH AN ENCLOSURE MOUNTED METERING UNIT. PROVIDE TRANSFORMER PAD ACCORDING TO ENTERGY REQUIREMENTS.
2. PROVIDE A 1250kW, 480Y/277V GENERATOR SET IN WEATHERPROOF LEVEL I ENCLOSURE. PROVIDE GENERATOR PAD, RE: STRUCTURAL SHEETS FOR REQUIREMENTS.
3. UTILITY PROVIDED UNDERGROUND CONDUIT/CABLE
4. UTILITY PROVIDED POWER POLES. OVERHEAD LINE RELOCATED BY THE UTILITY.
5. PROVIDE POLE MOUNTED LIGHTING FIXTURE WITH CONCRETE BASE. RE: 4/E-19 FOR DETAIL.
6. APPROXIMATE LOCATION OF THE OVERHEAD ELECTRICAL LINE RELOCATED BY THE UTILITY.
7. UTILITY PROVIDED UNDERGROUND CONDUIT/CABLE. UTILITY RECONNECTING TO EXISTING UNDERGROUND ELECTRICAL LINES TO RELOCATED POWER POLES.
8. RE: 1/E-3D FOR THE CONTINUATION OF THE EXISTING OVERHEAD ELECTRICAL LINE THAT THE UTILITY IS RELOCATING. A TOTAL OF FIVE (5) POWER POLES WILL BE RELOCATED.
9. APPROXIMATE LOCATION OF EXISTING UNDERGROUND ELECTRIC UTILITY DUCT BANK. CONFIRM EXACT DUCT BANK ROUTING WITH ENTERGY.

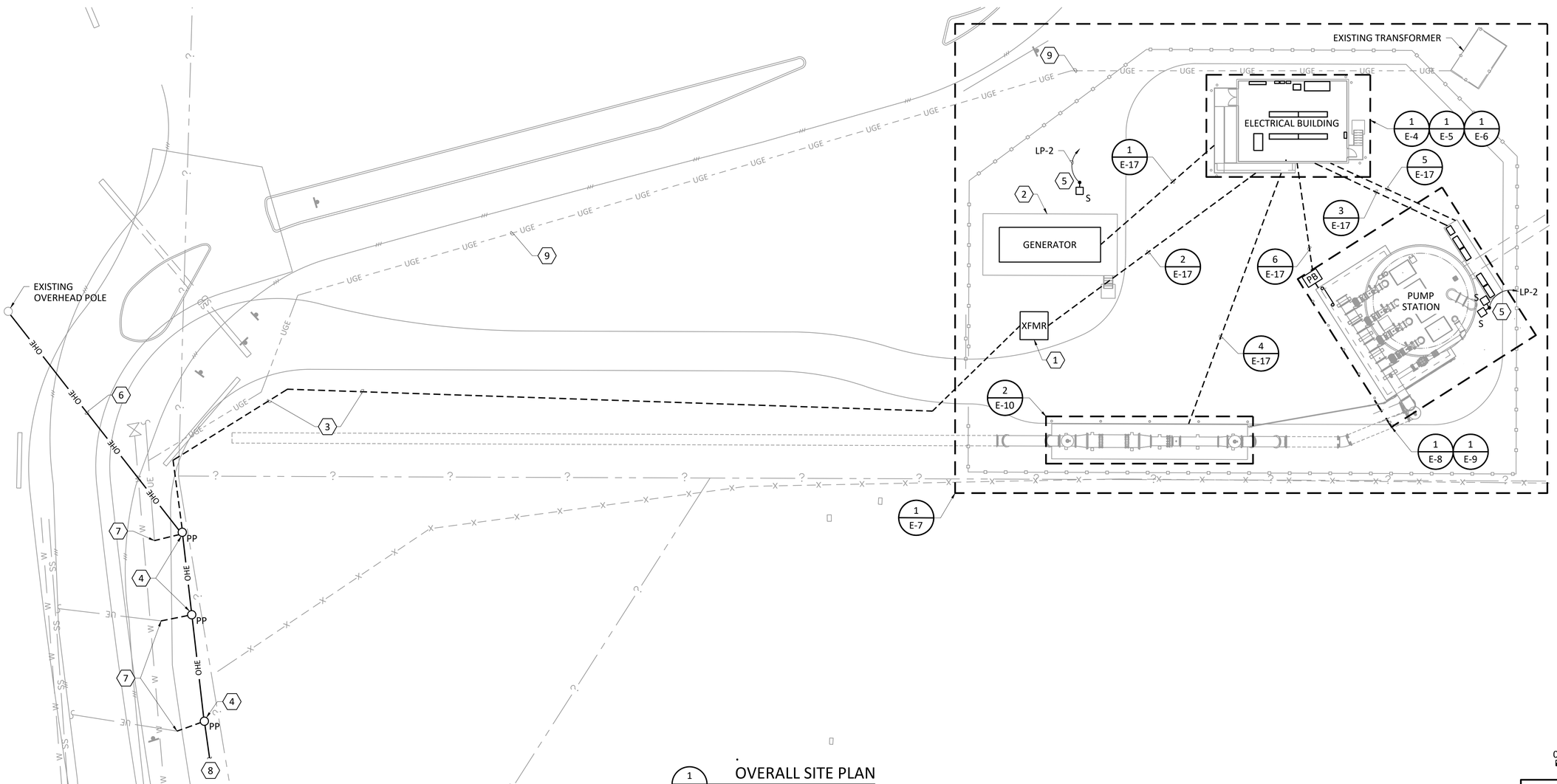

1 / - OVERALL SITE PLAN
1"=20'

ISSUED FOR BID

Freese and Nichols, Inc.
Texas Registered Engineering Firm F-2144

STATE OF TEXAS
REBECCA SANDOVAL
102369
LICENSED
PROFESSIONAL ENGINEER
01/26/2022

FREESE AND NICHOLS
10497 Town and Country Way,
Suite 600
Houston, Texas 77024
Phone - (713) 600-6800
Web - www.freese.com

CITY OF BEAUMONT
COLLIER'S FERRY PUMP STATION
ELECTRICAL
OVERALL SITE PLAN

NO.	ISSUE	BY	DATE

F&N JOB NO. BMT20326
DATE 01/07/2022
DESIGNED DJD
DRAWN JTR
REVISED -
CHECKED JNH
FILE NAME EL-ALL-PL-SITE.dwg

VERIFY SCALE 0 1
Bar is one inch on original drawing. If not one inch on this sheet, adjust scale.

SHEET E-3
SEQ. 115

ACAD Rel: 24.0s (LMS Tech)
Filename: N:\ELEC\EL-ALL-PL-SITE.dwg
Last Saved: 1/26/2022 12:46 PM Saved By: 03644

Plot Date: 1/26/2022 12:49 PM Plot By: 03644 Filename: N:\ELEC\EL-ALL-PL-SITE.dwg

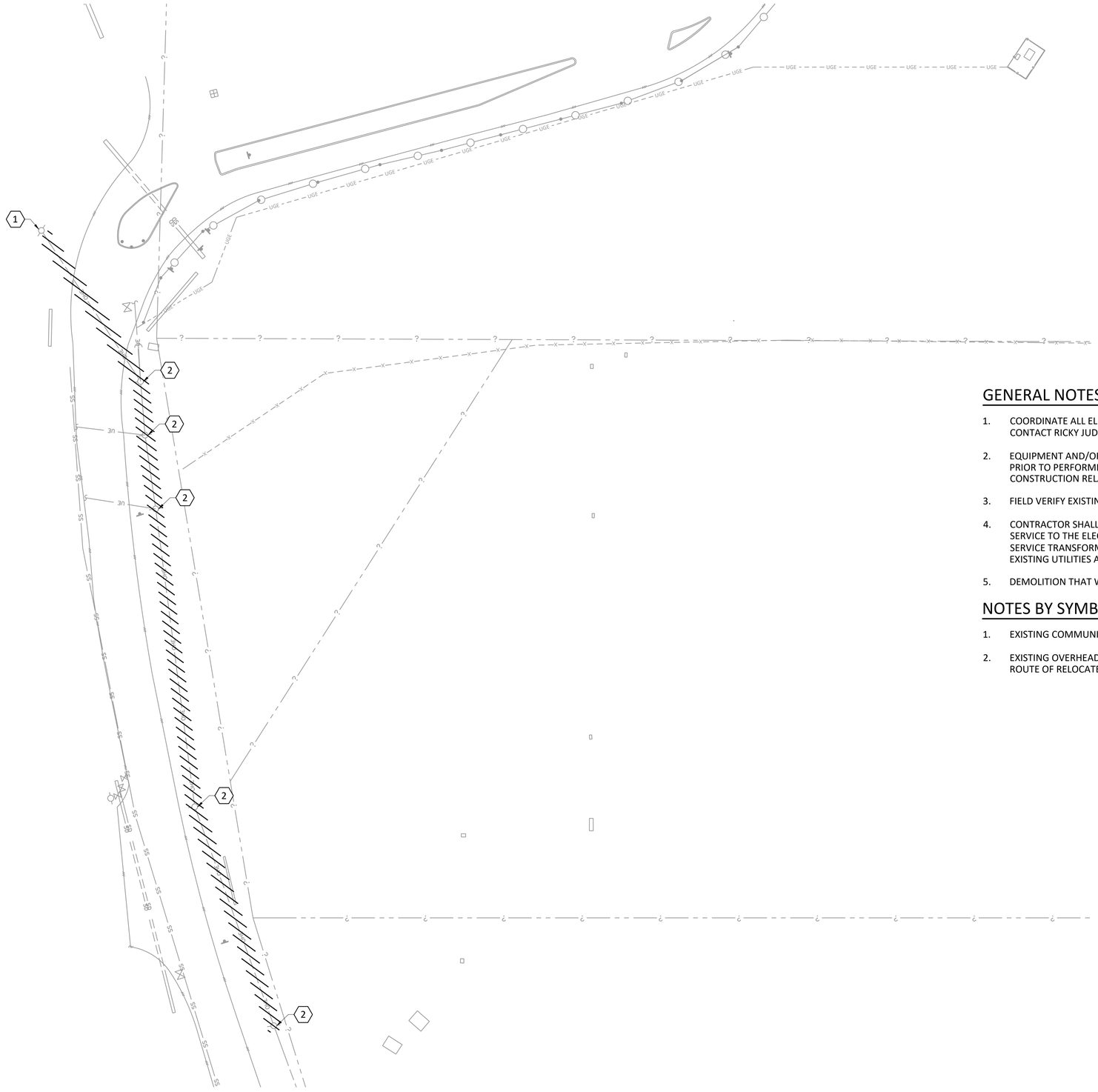

GENERAL NOTES:

1. COORDINATE ALL ELECTRICAL SERVICE WORK WITH ENTERGY TEXAS, INC. ENTERGY CONTACT RICKY JUDALET, PH: (409)785-2268.
2. EQUIPMENT AND/OR UTILITIES SHOWN LIGHT IS EXISTING. FIELD VERIFY EXACT LOCATION PRIOR TO PERFORMING ANY WORK. PROTECT EXISTING EQUIPMENT AND UTILITIES FROM CONSTRUCTION RELATED ACTIVITIES.
3. FIELD VERIFY EXISTING SITE CONDITIONS PRIOR TO SUBMITTING A BID.
4. CONTRACTOR SHALL PAY ALL COSTS/FEES ASSOCIATED WITH ESTABLISHING NEW 480V SERVICE TO THE ELECTRICAL BUILDING. COSTS MAY INCLUDE BUT ARE NOT LIMITED TO NEW SERVICE TRANSFORMER, METER/METER ENCLOSURE, GROUNDING, MODIFICATION TO EXISTING UTILITIES AND RELATED WORK.
5. DEMOLITION THAT WILL BE REQUIRED IS REPRESENTED BY HATCHING.

NOTES BY SYMBOL "⬡"

1. EXISTING COMMUNICATION POLE TO REMAIN.
2. EXISTING OVERHEAD ELECTRIC LINE TO BE RELOCATED BY THE UTILITY. RE: 1/E-3 FOR ROUTE OF RELOCATED LINE.

1 / - DEMOLITION SITE PLAN

1"=30'

NORTH

0 10' 20' 30' 60'

SCALE IN FEET

ISSUED FOR BID

Freese and Nichols, Inc.
Texas Registered Engineering Firm F-2144

STATE OF TEXAS
REBECCA SANDOVAL
102369
LICENSED
PROFESSIONAL ENGINEER
01/26/2022

FREESE AND NICHOLS

10497 Town and Country Way,
Suite 600
Houston, Texas 77024
Phone - (713) 600-6800
Web - www.freese.com

CITY OF BEAUMONT

COLLIER'S FERRY PUMP STATION

ELECTRICAL

DEMOLITION SITE PLAN

NO.	ISSUE	BY	DATE

F&N JOB NO. BMT20326
DATE 01/07/2022
DESIGNED DJD
DRAWN JTR
REVISED
CHECKED JNH
FILE NAME EL-ALL-PL-SITEDM.dwg

VERIFY SCALE Bar is one inch on original drawing. If not one inch on this sheet, adjust scale.
0 1

SHEET E-3D

SEQ. 116

ACAD Rel: 24.0s (LMS Tech)
Filename: N:\ELEC\EL-ALL-PL-SITEDM.dwg
Last Saved: 1/19/2022 5:48 PM Saved By: 03644

Plot Date: 1/26/2022 12:49 PM Plot By: 03644 Filename: N:\ELEC\EL-ALL-PL-SITEDM.dwg

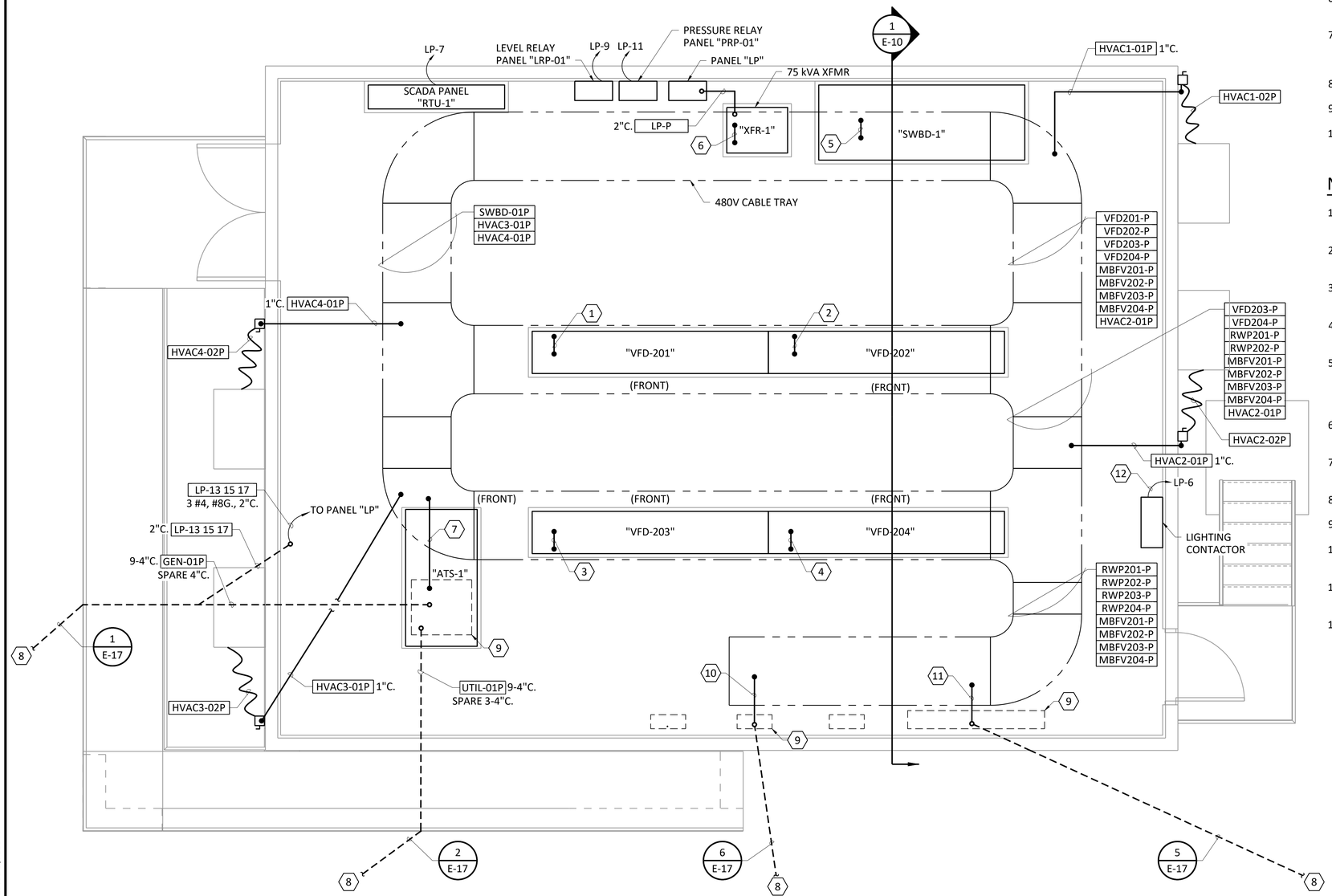

1 / - ELECTRICAL BUILDING POWER PLAN

3/8" = 1'-0"

GENERAL NOTES:

1. ALL EQUIPMENT SHOWN DARK TO BE PROVIDED UNDER THIS CONTRACT. ALL EQUIPMENT SHOWN LIGHT IS EXISTING AS INDICATED. ALL EQUIPMENT SHOWN LIGHT AND DASHED IS FUTURE AS INDICATED.
2. CONTRACTOR SHALL COORDINATE WITH EQUIPMENT SUPPLIER FOR LOCATION OF CABLE/CONDUIT PENETRATIONS INTO TOP/BOTTOM OF EQUIPMENT IN ELECTRICAL ROOM.
3. 120V CIRCUITS FEEDING MISCELLANEOUS EQUIPMENT TO BE 2 #12, #12G., 3/4"C. UNLESS NOTED OTHERWISE.
4. CONDUIT ROUTING SHALL NOT INTERFERE WITH REMOVAL OF MECHANICAL EQUIPMENT.
5. CAP AND PROVIDE A PULLSTRING IN SPARE CONDUIT.
6. THE CONTRACTOR SHALL PROVIDE CONDUIT AS REQUIRED FOR TRANSITION FROM CABLE TRAY TO EQUIPMENT.
7. THE CONTRACTOR SHALL BE RESPONSIBLE FOR SIZING AND PROVIDING ALL PULL BOXES AND JUNCTION BOXES AS REQUIRED BY THE NATIONAL ELECTRICAL CODE.
8. ALL CABLES IN THE CABLE TRAY SHALL BE CABLE TRAY RATED.
9. RE: 1/E-5 FOR POWER TO HVAC UNITS.
10. ALL STRUT FASTENERS, CONDUIT CLAMPS, AND OTHER HARDWARE USED TO SUPPORT/SECURE CONDUITS OR CABLES SHALL BE 316 STAINLESS STEEL.

NOTES BY SYMBOL "⬡"

1. ROUTE THE FOLLOWING CABLE/CONDUIT FROM THE CABLE TRAY TO VFD-201: VFD201-P, RWP201-P.
2. ROUTE THE FOLLOWING CABLE/CONDUIT FROM THE CABLE TRAY TO VFD-202: VFD202-P, RWP202-P.
3. ROUTE THE FOLLOWING CABLE/CONDUIT FROM THE CABLE TRAY TO VFD-203: VFD203-P, RWP203-P.
4. ROUTE THE FOLLOWING CABLE/CONDUIT FROM THE CABLE TRAY TO VFD-204: VFD204-P, RWP204-P.
5. ROUTE THE FOLLOWING CABLE/CONDUIT FROM THE CABLE TRAY TO SWBD-1: SWBD-01P, VFD201-P, VFD202-P, VFD203-P, VFD204-P, XFR-1P, HVAC1-01P, HVAC2-01P, HVAC3-01P, HVAC4-01P, MBFV201-P, MBFV202-P, MBFV203-P, MBFV204-P.
6. ROUTE THE FOLLOWING CABLE/CONDUIT FROM THE CABLE TRAY TO XFR-1: XFR-1P.
7. ROUTE THE FOLLOWING CABLE/CONDUIT FROM THE CABLE TRAY TO ATS-1: SWBD-01P.
8. RE: 1/E-3 FOR CONTINUATION.
9. CONDUIT STUB-UP AREA.
10. ROUTE THE FOLLOWING CABLE/CONDUIT INTO THE 480V CABLE TRAY: MBFV201-P, MBFV202-P, MBFV203-P, MBFV204-P.
11. ROUTE THE FOLLOWING CABLE/CONDUIT INTO THE 480V CABLE TRAY" RWP201-P, RWP202-P, RWP203-P, RWP204-P.
12. ROUTE THE FOLLOWING CABLE/CONDUIT FROM THE LIGHTING CONTACTOR TO THE 120V CABLE TRAY.

NORTH

0 1' 2' 4'
3/8"=1'-0

ISSUED FOR BID

Freese and Nichols, Inc.
Texas Registered Engineering Firm F-2144

STATE OF TEXAS
REBECCA SANDOVAL
102369
LICENSED
PROFESSIONAL ENGINEER
01/26/2022

FREESE AND NICHOLS
10497 Town and Country Way,
Suite 600
Houston, Texas 77024
Phone - (713) 600-6800
Web - www.freese.com

CITY OF BEAUMONT
COLLIER'S FERRY PUMP STATION

ELECTRICAL
ELECTRICAL BUILDING POWER PLAN

F&N JOB NO.	BMT20326
DATE	01/07/2022
DESIGNED	DJD
DRAWN	JTR
REVISED	-
CHECKED	JNH
FILE NAME	EL-ALL-PL-POWR01.dwg

NO.	ISSUE	DATE	BY

VERIFY SCALE 0 1
Bar is one inch on original drawing. If not one inch on this sheet, adjust scale.

SHEET E-4

SEQ. 117

ACAD Rel: 24.0s (LMS Tech)
Filename: N:\ELEC\EL-ALL-PL-POWR01.dwg
Last Saved: 1/19/2022 2:23 PM Saved By: 03644

Plot Date: 1/26/2022 12:49 PM Plot By: 03644 Filename: N:\ELEC\EL-ALL-PL-POWR01.dwg

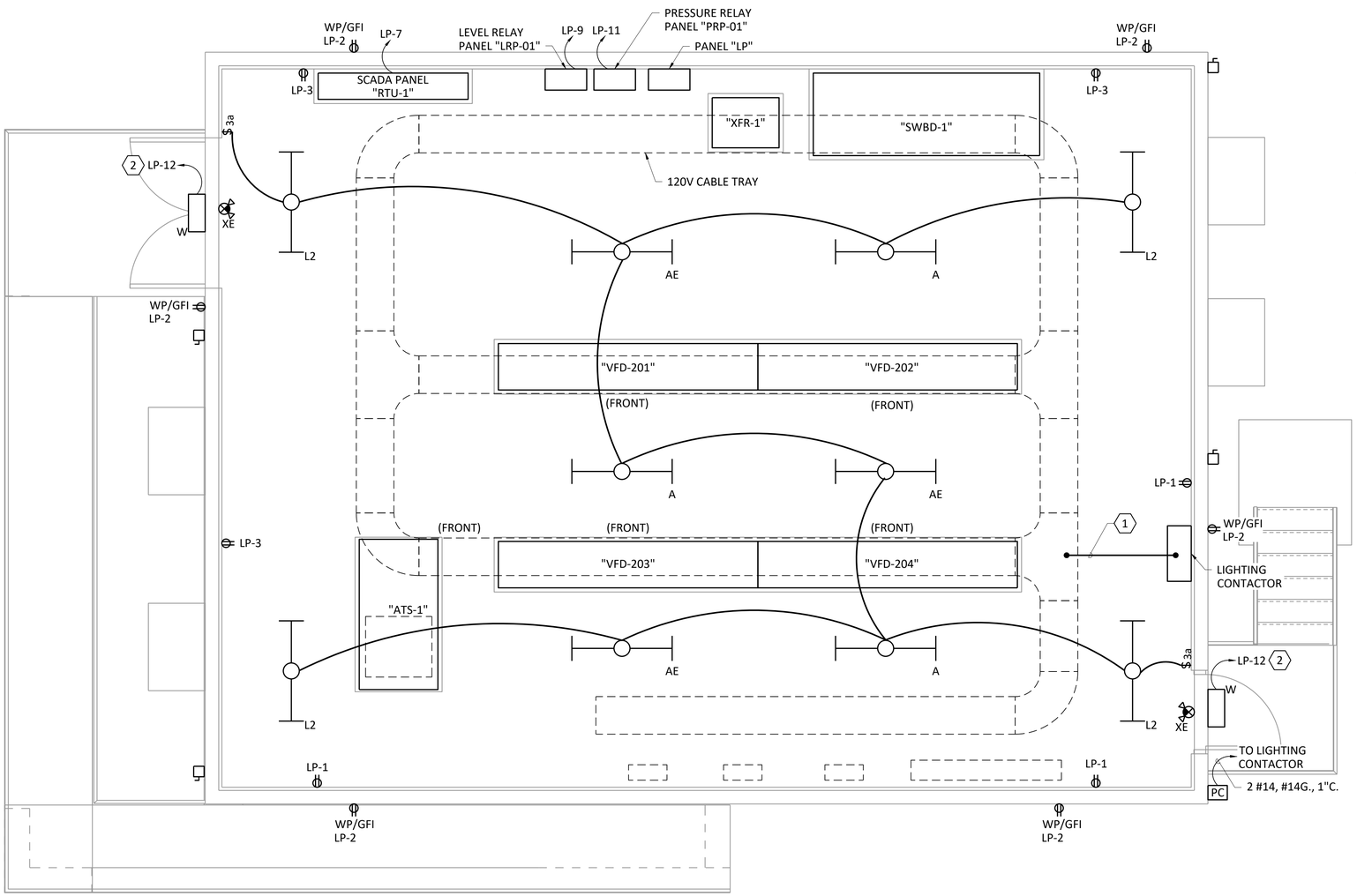

GENERAL NOTES:

1. ALL EQUIPMENT SHOWN DARK TO BE PROVIDED UNDER THIS CONTRACT. ALL EQUIPMENT SHOWN LIGHT IS EXISTING AS INDICATED. ALL EQUIPMENT SHOWN LIGHT AND DASHED IS FUTURE AS INDICATED.
2. CONTACTOR TO PROVIDE ALL WIRING AND CONDUIT AS REQUIRED BETWEEN LIGHT SWITCHES AND LIGHTING CONTRACTOR/LIGHTS.
3. ALL RECEPTACLE WIRING SHALL BE TRAY RATED A MINIMUM #12, #12G., 3/4"C. UNLESS NOTED OTHERWISE.
4. CONDUIT FOR EXTERIOR BUILDING MOUNTED LIGHTS, RECEPTACLES AND CAMERAS TO BE INSTALLED INSIDE OF BUILDING.
5. EMERGENCY LIGHTS IN ELECTRICAL ROOM SHALL BE NON-SWITCHED AND SHALL BE CONNECTED TO THE LIGHTING CIRCUIT FOR THE ROOM.
6. CONDUIT ROUTING SHALL NOT INTERFERE WITH REMOVAL OF MECHANICAL/ELECTRICAL EQUIPMENT.
7. EXIT SIGNS SHALL BE NON-SWITCHED AND CONNECTED TO CIRCUIT FOR THE ROOM.
8. LIGHTING FIXTURES TYPE "A", "L2", AND "AE" SHALL BE MOUNTED AT 10'-0" AFF.
9. LIGHTING FIXTURES TYPE "W" SHALL BE MOUNTED AT 9'-0" AFF.

NOTES BY SYMBOL "⬡"

1. ROUTE THE FOLLOWING CABLE/CONDUIT FROM THE LIGHTING CONTACTOR TO THE 120V CABLE TRAY: LP-6.
2. VIA LIGHTING CONTACTOR.

1 / - ELECTRICAL BUILDING
LIGHTING & RECEPTACLES PLAN
3/8" = 1'-0"

NORTH
0 1' 2' 4'
3/8"=1'-0

ISSUED FOR BID

Freese and Nichols, Inc.
Texas Registered Engineering Firm F-2144

STATE OF TEXAS
REBECCA SANDOVAL
102369
LICENSED
PROFESSIONAL ENGINEER
01/26/2022

FREESE AND NICHOLS
10497 Town and Country Way,
Suite 600
Houston, Texas 77024
Phone - (713) 600-6800
Web - www.freese.com

CITY OF BEAUMONT
COLLIER'S FERRY PUMP STATION

ELECTRICAL
ELECTRICAL BUILDING
HVAC POWER, LIGHTING & RECEPTACLES PLAN

NO.	ISSUE	BY	DATE

F&N JOB NO. BMT20326
DATE 01/07/2022
DESIGNED DJD
DRAWN JTR
REVISED -
CHECKED JNH
FILE NAME EL-ALL-PL-LTNG01.dwg

VERIFY SCALE Bar is one inch on original drawing. If not one inch on this sheet, adjust scale.
0 1

SHEET E-5
SEQ. 118

ACAD Rel: 24.0s (LMS Tech)
Filename: N:\ELEC\EL-ALL-PL-LTNG01.dwg
Last Saved: 1/19/2022 1:54 PM Saved By: 03823

Plot Date: 1/26/2022 12:49 PM Plot By: 03644 Filename: N:\ELEC\EL-ALL-PL-LTNG01.dwg

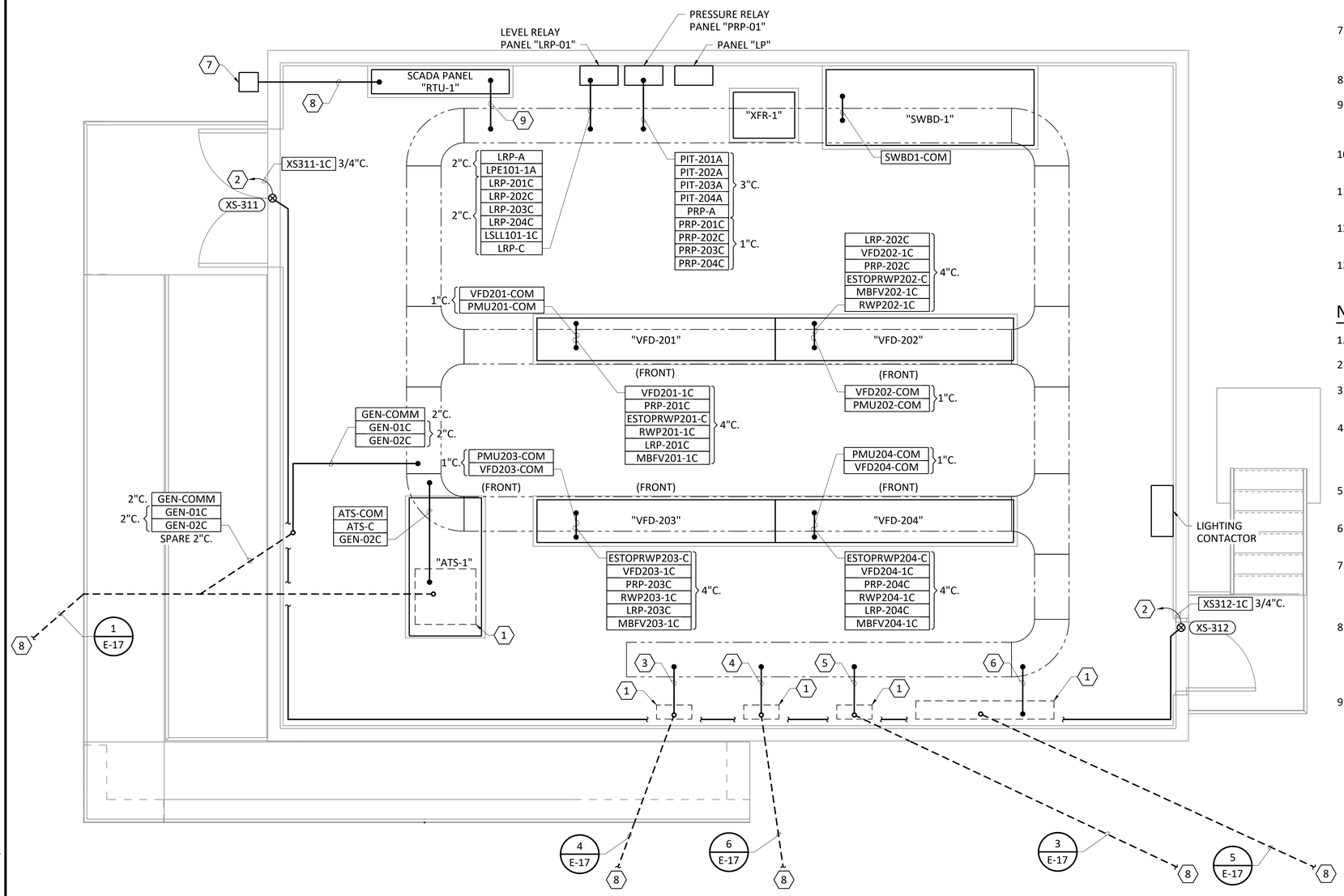

1 - ELECTRICAL BUILDING INSTRUMENTATION & CONTROLS PLAN

3/8" = 1'-0"

GENERAL NOTES:

1. ALL EQUIPMENT SHOWN DARK TO BE PROVIDED UNDER THIS CONTRACT. ALL EQUIPMENT SHOWN LIGHT IS EXISTING AS INDICATED. ALL EQUIPMENT SHOWN LIGHT AND DASHED IS FUTURE AS INDICATED.
2. CONTRACTOR SHALL COORDINATE WITH EQUIPMENT SUPPLIER FOR LOCATION OF CABLE/CONDUIT PENETRATIONS INTO TOP/BOTTOM OF EQUIPMENT IN ELECTRICAL ROOM.
3. CONDUIT ROUTING SHALL NOT INTERFERE WITH REMOVAL OF MECHANICAL EQUIPMENT.
4. CAP AND PROVIDE A PULL STRING IN SPARE CONDUIT.
5. CONTRACTOR SHALL COORDINATE LOCATION OF CONDUIT STUB-UPS AT MOTOR, AND MOTOR OPERATED VALVE WITH EQUIPMENT MANUFACTURER.
6. THE CONTRACTOR SHALL PROVIDE CONDUIT AS REQUIRED FOR TRANSITION FROM CABLE TRAY TO EQUIPMENT.
7. THE CONTRACTOR SHALL BE RESPONSIBLE FOR SIZING AND PROVIDING ALL PULL BOXES AND JUNCTION BOXES AS REQUIRED BY THE NATIONAL ELECTRICAL CODE.
8. ALL CABLES IN THE CABLE TRAY SHALL BE CABLE TRAY RATED.
9. ALL ANALOG (4-20mA) SIGNALS, AND COMMUNICATION SIGNALS (CAT 6) SHALL BE ROUTED IN PVC COATED RIGID STEEL CONDUIT FOR ALL UNDERGROUND APPLICATIONS.
10. SEPARATE 120V CONDUCTORS FROM TWISTED SHIELDED PAIRS AND TRIADS WITH A STEEL BARRIER IN 120V CABLE TRAY.
11. THE CONTRACTOR SHALL MAINTAIN A MINIMUM OF 18" BETWEEN THE 480V CABLE TRAY AND THE 120V CABLE TRAY.
12. RE: E-16 INTERCONNECTION DIAGRAM FOR FINAL DESTINATION OF ALL CABLES.
13. ALL STRUT FASTENERS, CONDUIT CLAMPS, AND OTHER HARDWARE USED TO SUPPORT/SECURE CONDUITS OR CABLES SHALL BE 316 STAINLESS STEEL.

NOTES BY SYMBOL "⬡"

1. CONDUIT STUB-UP AREA.
2. TO "RTU-1"
3. ROUTE THE FOLLOWING CABLE/CONDUIT INTO THE 120V CABLE TRAY: FIT250-A, FIT250-C, LP-10, LP-14.
4. ROUTE THE FOLLOWING CABLE/CONDUIT INTO THE 120V CABLE TRAY: MBFV201-1C, MBFV202-1C, MBFV203-1C, MBFV204-1C, MBFV201-1A, MBFV202-1A, MBFV203-1A, MBFV204-1A, ESTOPRWP201-C, ESTOPRWP202-C, ESTOPRWP203-C, ESTOPRWP204-C, PIT201-A, PIT202-A, PIT203-A, PIT204-A.
5. ROUTE THE FOLLOWING CABLE/CONDUIT INTO THE 120V CABLE TRAY: LSLL101-1C, LPE101-1A.
6. ROUTE THE FOLLOWING CABLE/CONDUIT INTO THE 120V CABLE TRAY: RWP201-1C, RWP202-1C, RWP203-1C, RWP204-1C.
7. PROVIDE A CELLULAR ANTENNA AND MOUNT AT 10'-0" AFF. PROVIDE ALL MOUNTING HARDWARE AND ANCILLARY EQUIPMENT REQUIRED FOR A COMPLETE AND OPERATIONAL SYSTEM. REFER TO DIVISION 409002 SCADA SPECIFICATIONS FOR ANTENNA REQUIREMENTS.
8. PROVIDE COMMUNICATION CABLE IN 1" CONDUIT BETWEEN THE CELLULAR RADIO LOCATED IN THE SCADA CABINET AND THE CELLULAR ANTENNA. COORDINATE WITH THE CELLULAR EQUIPMENT MANUFACTURERS FOR THE COMMUNICATION CABLE REQUIRED AND REFER TO DIVISION 409002 SCADA SPECIFICATION FOR CABLE REQUIREMENTS.
9. ROUTE THE FOLLOWING CABLE/CONDUIT FROM "RTU-1" TO 120V CABLE TRAY:

-ANALOG: LRP-A, PRP-A, FIT250-A, MBFV201-1A, MBFV202-1A, MBFV203-1A, MBFV204-1A

-DISCRETE: VFD201-1C, VFD202-1C, VFD203-1C, VFD204-1C, SWBD1-C, ATS-1C, GEN-01C, FIT250-C, LRP-C

-COMM: VFD201-COM, VFD202-COM, VFD203-COM, VFD204-COM, GEN-COMM

NORTH

0 1' 2' 4'
3/8"=1'-0

ISSUED FOR BID

Freese and Nichols, Inc.
Texas Registered Engineering Firm F-2144

STATE OF TEXAS
REBECCA SANDOVAL
102369
PROFESSIONAL ENGINEER
01/26/2022

FREESE AND NICHOLS
10497 Town and Country Way,
Suite 600
Houston, Texas 77024
Phone - (713) 600-6800
Web - www.freese.com

CITY OF BEAUMONT
COLLIER'S FERRY PUMP STATION

ELECTRICAL
ELECTRICAL BUILDING
INSTRUMENTATION & CONTROLS PLAN

NO.	ISSUE	BY	DATE

F&N JOB NO. BMT20326
DATE 01/07/2022
DESIGNED DJD
DRAWN JTR
REVISED -
CHECKED JNH
FILE NAME EL-ALL-PL-CTRL01.dwg

VERIFY SCALE Bar is one inch on original drawing. If not one inch on this sheet, adjust scale.
0 1

SHEET E-6
SEQ. 119

ACAD Rel: 24.0s (LMS Tech)
Filename: N:\ELEC\EL-ALL-PL-CTRL01.dwg
Last Saved: 1/25/2022 8:07 PM Saved By: 03644

Plot Date: 1/26/2022 12:49 PM Plot By: 03644 Filename: N:\ELEC\EL-ALL-PL-CTRL01.dwg

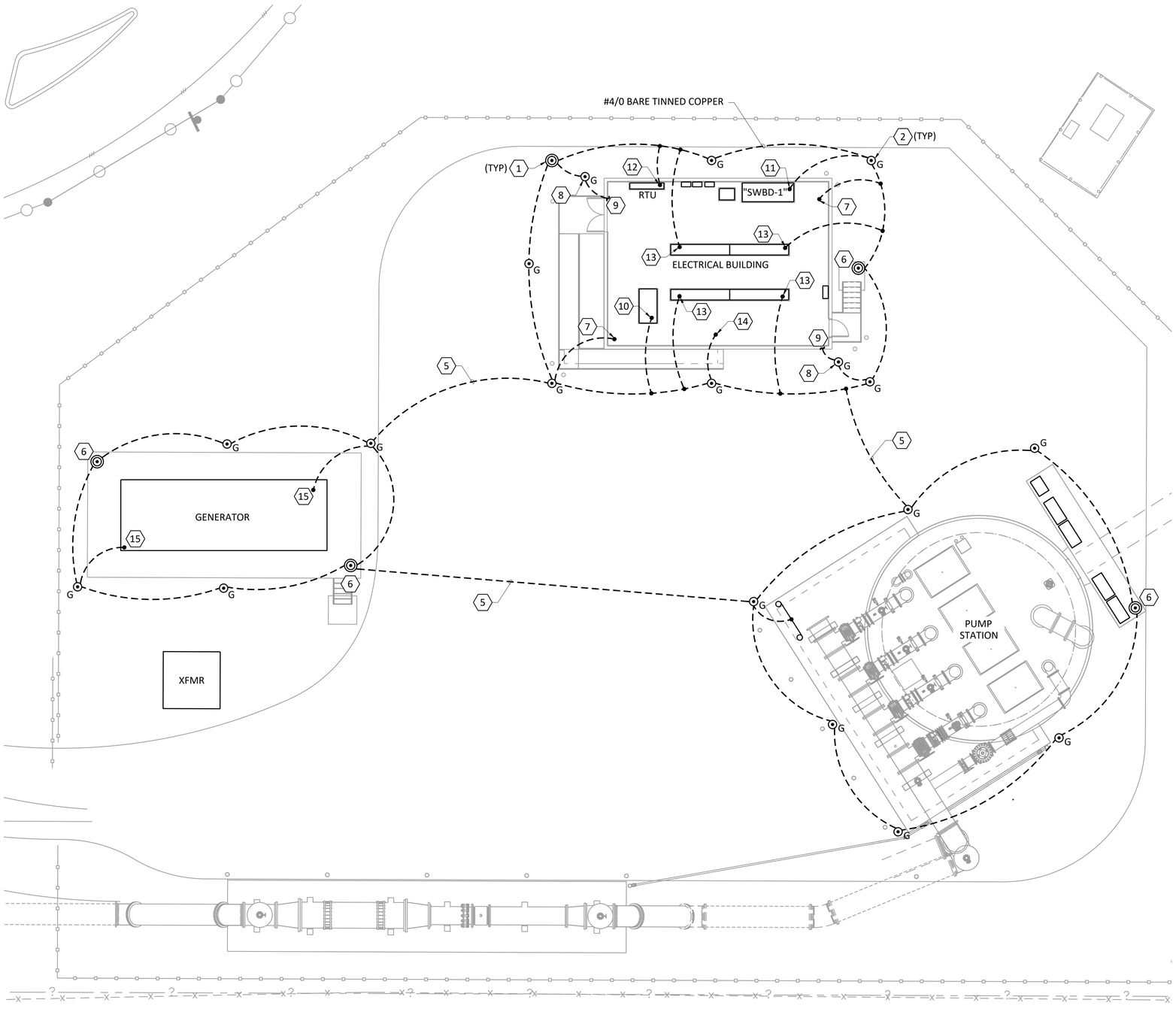

1 SITE GROUNDING & LIGHTING PLAN
1"=10'

GENERAL NOTES:

1. ALL EQUIPMENT SHOWN DARK TO BE PROVIDED UNDER THIS CONTRACT. ALL EQUIPMENT SHOWN LIGHT IS EXISTING AS INDICATED. ALL EQUIPMENT SHOWN LIGHT AND DASHED IS FUTURE AS INDICATED.
2. CONTRACTOR SHALL COORDINATE WITH EQUIPMENT MANUFACTURERS FOR LOCATIONS TO TERMINATE #4/0 GROUND CONDUCTORS TO EQUIPMENT PRIOR TO INSTALLATION OF GROUND PADS AND EQUIPMENT PADS.
3. THE CONTRACTOR SHALL PROVIDE ALL MATERIALS AS REQUIRED FOR A COMPLETE GROUNDING SYSTEM. THE GROUNDING PLAN DOES NOT SHOW ALL GROUNDING AS REQUIRED BY CODES, STANDARDS AND THE SPECIFICATIONS. THE CONTRACTOR TO GROUND ALL EQUIPMENT IN ACCORDANCE WITH THE NATIONAL ELECTRICAL CODE (NEC) AND SPECIFICATION 26 05 26, GROUNDING AND BONDING FOR ELECTRICAL SYSTEMS AND SPECIFICATION 26 41 13, LIGHTNING PROTECTION FOR STRUCTURES.
4. THE LIGHTNING PROTECTION SYSTEM SHALL HAVE DEDICATED GROUND RODS FOR EACH DOWN LEAD. THE DEDICATED RODS TO BE BONDED TO THE NEAREST COUNTER POISE GROUND ROD. BONDING THE LIGHTNING PROTECTION DOWN LEAD DIRECTLY TO THE COUNTER POISE GROUND RODS OR CONDUCTORS IS PROHIBITED.
5. THE LIGHTNING PROTECTION COMPANY SHALL PROVIDE A COMPLETE AND OPERATIONAL SYSTEM FOR THE SITE. INCLUDE ALL COSTS AND FEES IN THE BASE BID.
6. CONTRACTOR SHALL BOND BARE TINNED COPPER GROUND ROUTED IN UNDERGROUND DUCT BANKS TO BUILDING GROUNDING SYSTEMS.

NOTES BY SYMBOL "⬡"

1. GROUND TEST WELL. RE: 3/E-18 FOR DETAIL.
2. GROUND ROD.
3. PROVIDE POLE MOUNTED LIGHTING FIXTURE WITH CONCRETE BASE. RE: 4/E-19 FOR DETAIL.
4. RE: 1/E-3 FOR CONTINUATION.
5. CONNECT THE ELECTRICAL BUILDING GROUND COUNTERPOISES WITH A #4/0 BARE TINNED COPPER CONDUCTOR. RE: 6/E-18 FOR DETAIL.
6. LOCATE GROUND ROD TEST WELL IN PAVEMENT.
7. PROVIDE A MECHANICAL CONNECTION TO REINFORCEMENT BAR. REINFORCEMENT BAR SHALL BE A MINIMUM OF 1/2" DIAMETER AND 20'-0" LENGTH.
8. GROUND ROD FOR LIGHTNING PROTECTION SYSTEM.
9. #4/0 CONDUCTOR TO LIGHTNING PROTECTION SYSTEM.
10. #4/0 CONDUCTOR TO 480V ATS GROUND BUS. RE: 1/E-19 FOR DETAIL.
11. #4/0 CONDUCTOR TO 480V SWITCHBOARD GROUND BUS. RE: 1/E-19 FOR DETAIL.
12. #4/0 CONDUCTOR TO RTU CABINET GROUND PAD. RE: 1/E-19 FOR DETAIL.
13. #4/0 CONDUCTOR TO 480V VFDS. RE:1/E-19 FOR DETAIL.
14. STUB-UP GROUND TO BE USED FOR GROUND OF CONDUITS/DUCT BANK PENETRATING THE STRUCTURE.
15. #4/0 CONDUCTOR TO 480V GENERATOR GROUND PAD. RE:5/E-20 FOR DETAIL.

NORTH

0 10' 20'
SCALE IN FEET

ISSUED FOR BID

Freese and Nichols, Inc.
Texas Registered Engineering Firm F-2144

STATE OF TEXAS
REBECCA SANDOVAL
102369
LICENSED
PROFESSIONAL ENGINEER
01/26/2022

FREESE AND NICHOLS
10497 Town and Country Way,
Suite 600
Houston, Texas 77024
Phone - (713) 600-6800
Web - www.freese.com

CITY OF BEAUMONT
COLLIER'S FERRY PUMP STATION
ELECTRICAL
SITE GROUNDING & LIGHTING PLAN

F&N JOB NO.	BMT20326
DATE	01/07/2022
DESIGNED	DJD
DRAWN	JTR
REVISED	-
CHECKED	JNH
FILE NAME	EL-ALL-PL-SITE01.dwg

NO.	ISSUE	BY	DATE

VERIFY SCALE 0 1
Bar is one inch on original drawing. If not one inch on this sheet, adjust scale.

SHEET E-7
SEQ. 120

ACAD Rel: 24.0s (LMS Tech)
Filename: N:\ELEC\EL-ALL-PL-SITE01.dwg
Last Saved: 1/19/2022 3:08 PM Saved By: 03644

Plot Date: 1/26/2022 12:49 PM Plot By: 03644 Filename: N:\ELEC\EL-ALL-PL-SITE01.dwg

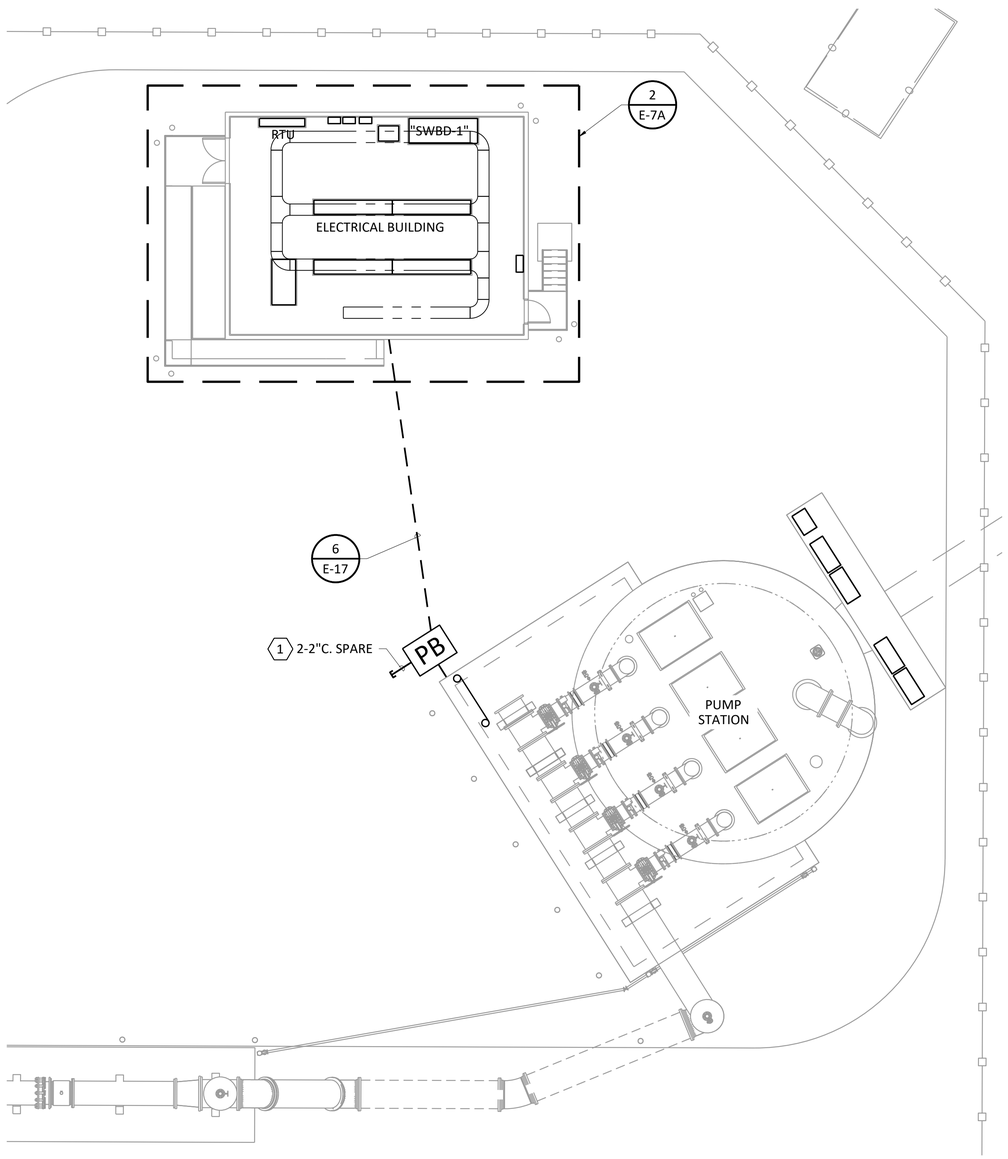

GENERAL NOTES:

1. ALL CONDUITS SHALL HAVE PULL STRINGS. ALL CONDUIT MUST HAVE SWEEPING 45 AND 90 DEGREE TURNS. NO HARD TURN ELBOWS SHALL BE ALLOWED.
2. ALL EQUIPMENT SHOWN DARK TO BE PROVIDED UNDER THIS CONTRACT. ALL EQUIPMENT SHOWN LIGHT IS EXISTING AS INDICATED. ALL EQUIPMENT SHOWN LIGHT AND DASHED IS FUTURE AS INDICATED.
3. CONDUIT ROUTING SHALL NOT INTERFERE WITH REMOVAL OF MECHANICAL EQUIPMENT.
4. CAP AND PROVIDE A PULL STRING IN SPARE CONDUIT.
5. ALL STRUT FASTENERS, CONDUIT CLAMPS, AND OTHER HARDWARE USED TO SUPPORT/SECURE CONDUITS OR CABLES SHALL BE 316 STAINLESS STEEL.

NOTES BY SYMBOL "⬡"

1. PROVIDE TWO SPARE 2" CONDUIT STUBBED OUT 2'-0" FROM PULL BOX. CUT AND CAP CONDUIT AND PROVIDE PULL STRING FOR FUTURE USE.
2. 2'-6" X 1'-8" SPACE RESERVED FOR FUTURE SECURITY PANEL PROVIDED BY OWNER. SPACE SHALL HAVE 1'-6" CLEARANCE FROM THE LIGHTING CONTACTOR PANEL.
3. PROVIDE 2" CONDUIT WITH PULL STRING.
4. CAP CONDUIT ABOVE THE RESERVED SECURITY PANEL SPACE AT 7'-0" AFF.
5. PROVIDE A JUNCTION BOX FOR FUTURE USE MOUNTED AT 10'-0" AFF.
6. RE: 2/E-18 FOR CONDUIT THROUGH WALL PENETRATION DETAIL.
7. PROVIDE NEMA 4X, 304 STAINLESS STEEL JUNCTION BOX MOUNTED 18 INCHES FROM THE TOP OF THE EXTERIOR WALL.
8. PROVIDE A QUADPLEX RECEPTACLE WITHIN THE SECURITY PANEL SPACE. MOUNT AT 4'-0" AFF.
9. PROVIDE 3" CONDUIT TO TRANSITION FROM ONE OF THE SPARE 3" CONDUITS IN DUCT BANK 6/E-17 TO THE 120V CABLE TRAY.

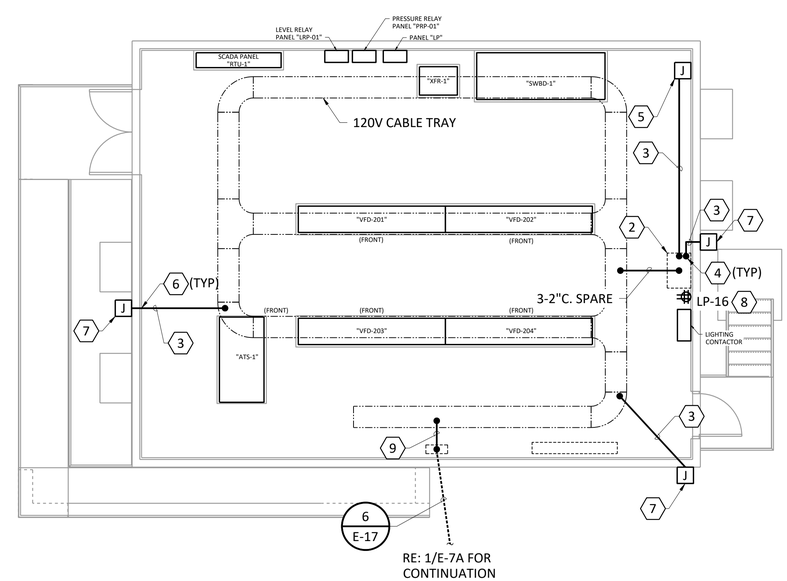

NORTH 1 - SITE SECURITY PLAN
1"=10'

NORTH 2 - ELECTRICAL BUILDING SECURITY PLAN
3/16" = 1'-0"

0 10' 20'
SCALE IN FEET
0 4' 8'
3/16"=1'-0"

ISSUED FOR BID

Freese and Nichols, Inc.
Texas Registered Engineering Firm F-2144

STATE OF TEXAS
REBECCA SANDOVAL
102369
LICENSED
PROFESSIONAL ENGINEER
01/26/2022

FREESE AND NICHOLS
10497 Town and Country Way,
Suite 600
Houston, Texas 77024
Phone - (713) 600-6800
Web - www.freese.com

CITY OF BEAUMONT
COLLIER'S FERRY PUMP STATION
ELECTRICAL
SECURITY PLANS

F&N JOB NO.	BMT20326
DATE	01/07/2022
DESIGNED	DJD
DRAWN	JTR
REVISED	-
CHECKED	JNH
FILE NAME	EL-SEC-PL-SITE.dwg

NO.	ISSUE	BY	DATE

VERIFY SCALE 0 1
Bar is one inch on original drawing. If not one inch on this sheet, adjust scale.

SHEET E-7A
SEQ. 121

ACAD Ref: 24.0s (LMS Tech)
Filename: N:\ELEC\EL-SEC-PL-SITE.dwg
Last Saved: 1/19/2022 2:23 PM Saved By: 03644

Plot Date: 1/26/2022 12:49 PM Plot By: 03644 Filename: N:\ELEC\EL-SEC-PL-SITE.dwg

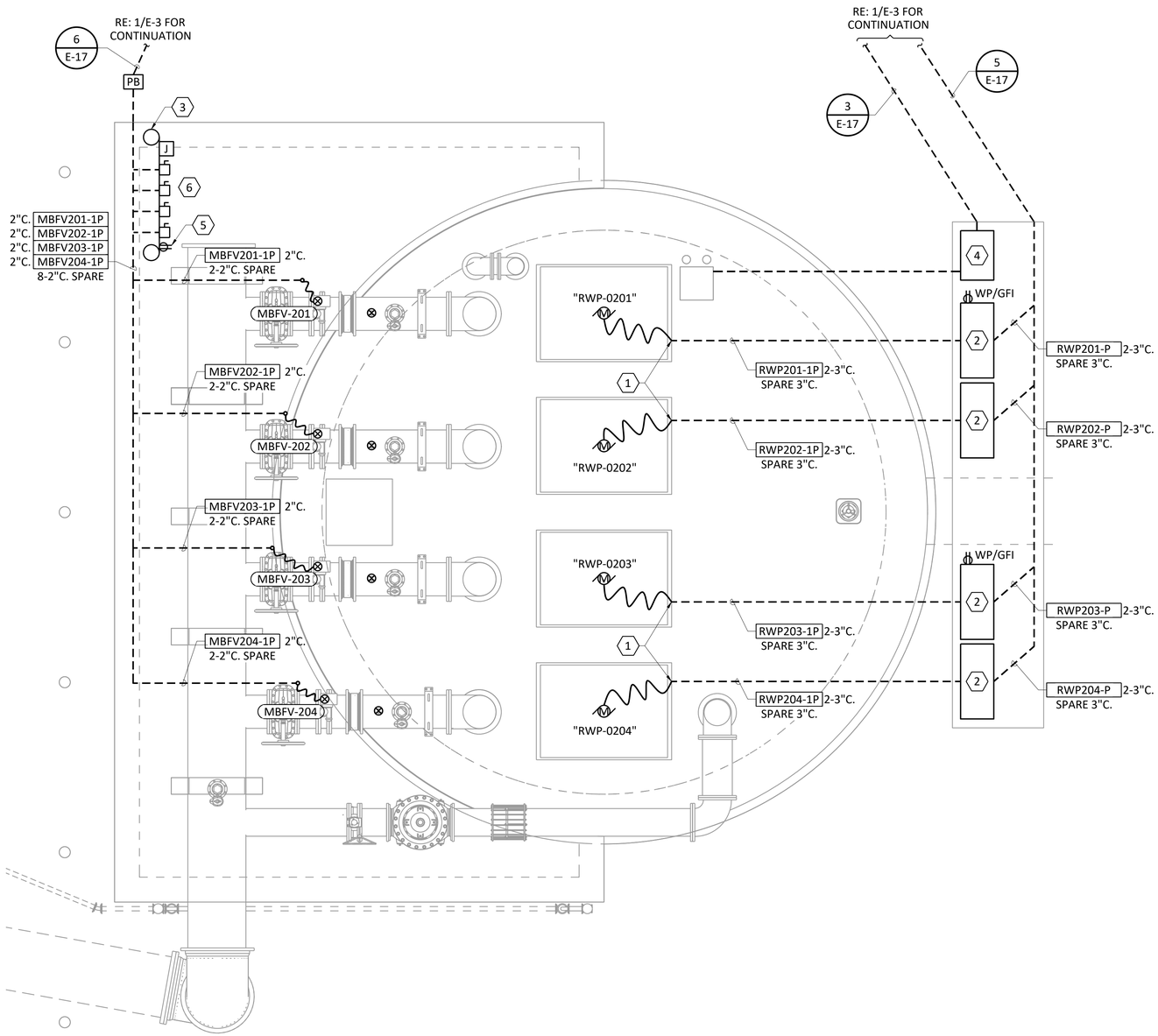

1 / - PUMP STATION POWER PLAN

1/4" = 1'-0"

GENERAL NOTES:

1. POWER, ANALOG, AND DISCRETE CONDUCTORS SHALL BE ROUTED IN SEPARATE CONDUITS.
2. CONTRACTOR SHALL COORDINATE LOCATION OF CONDUIT STUB-UPS AT MOTOR OPERATED VALVE WITH EQUIPMENT MANUFACTURER.
3. CONDUIT ROUTING SHALL NOT INTERFERE WITH REMOVAL OF MECHANICAL EQUIPMENT.
4. SUPPORTING HARDWARE AND FASTENERS SHALL BE 316 STAINLESS STEEL.

NOTES BY SYMBOL "⬡"

1. RE: 3/E-19 FOR DETAIL ON CONDUIT TRANSITION TO WET WELL.
2. SUBMERSIBLE CABLE TERMINATION CABINET NEMA 4X, 316 STAINLESS STEEL. RE:2/E-19 FOR DETAIL.
3. RE: 4/E-20 FOR EQUIPMENT RACK DETAIL.
4. LEVEL INSTRUMENT TERMINATION CABINET NEMA 4X, 316 STAINLESS STEEL.
5. PROVIDE A RACK MOUNTED WATERPROOF, GFI RECEPTACLE. PROVIDE 2 #12, #12G., 1"C. TO CONNECT TO CIRCUIT "LP-5".
6. PROVIDE A 30A/3P/NF RACK-MOUNTED DISCONNECT SWITCH IN NEMA 4X 316 STAINLESS STEEL ENCLOSURE FOR EACH MOTOR OPERATED VALVE.

NORTH

0 1' 2' 4' 8'
1/4"=1'-0"

ISSUED FOR BID

Freese and Nichols, Inc.
Texas Registered Engineering Firm F-2144

STATE OF TEXAS
REBECCA SANDOVAL
102369
LICENSED
PROFESSIONAL ENGINEER
01/26/2022

FREESE AND NICHOLS
10497 Town and Country Way,
Suite 600
Houston, Texas 77024
Phone - (713) 600-6800
Web - www.freese.com

CITY OF BEAUMONT
COLLIER'S FERRY PUMP STATION

ELECTRICAL
PUMP STATION
POWER PLAN

NO.	ISSUE	BY	DATE

F&N JOB NO. BMT20326
DATE 01/07/2022
DESIGNED DJD
DRAWN JTR
REVISED -
CHECKED JNH

FILE NAME EL-ALL-PL-POWR02.dwg

VERIFY SCALE 0 1
Bar is one inch on original drawing. If not one inch on this sheet, adjust scale.

SHEET E-8
SEQ. 122

ACAD Rel: 24.0s (LMS Tech)
Filename: N:\ELEC\EL-ALL-PL-POWR02.dwg
Last Saved: 1/19/2022 1:58 PM Saved By: 03823

Plot Date: 1/26/2022 12:50 PM Plot By: 03644 Filename: N:\ELEC\EL-ALL-PL-POWR02.dwg

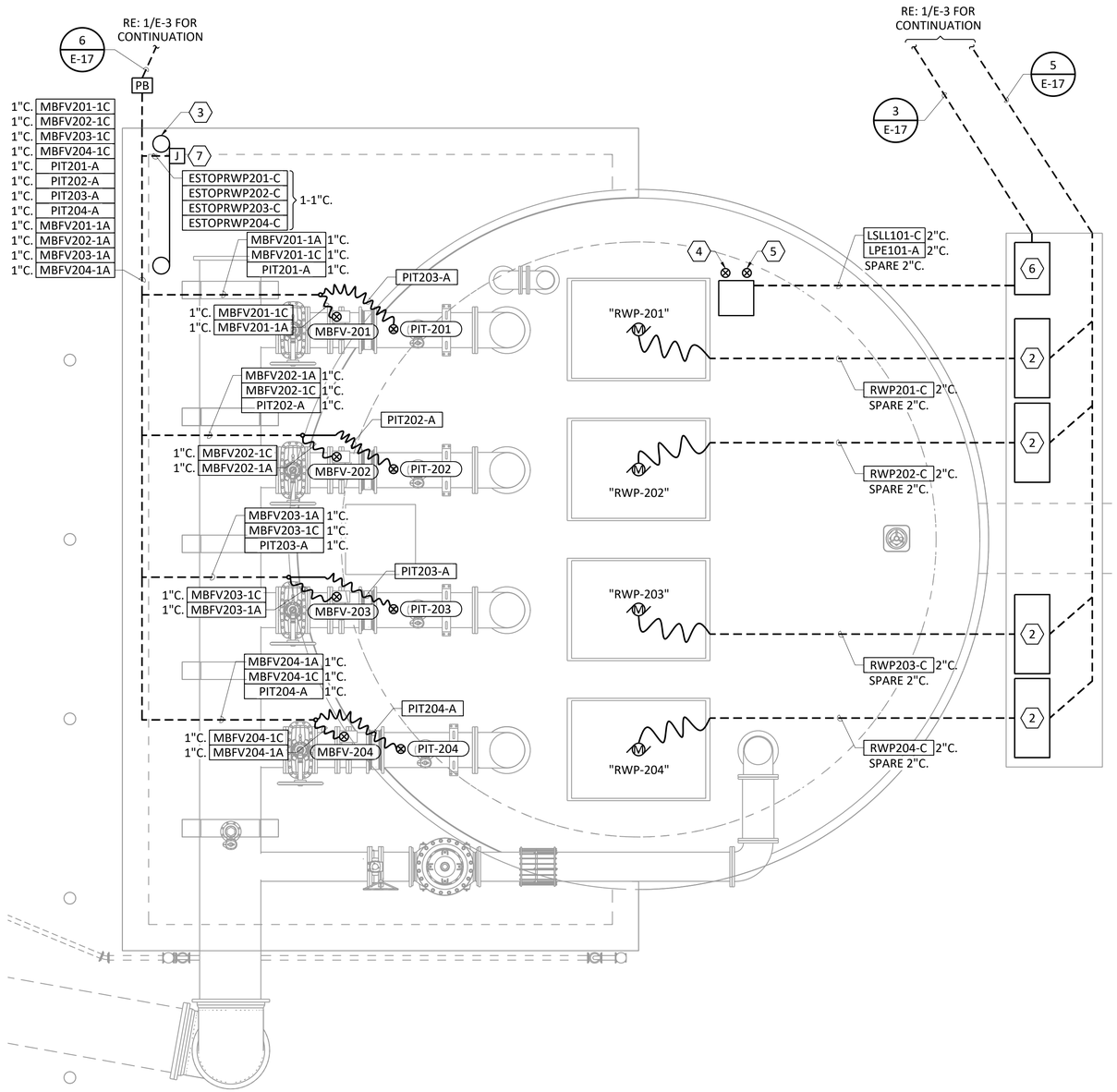

1 / - PUMP STATION INSTRUMENTATION & CONTROLS PLAN

1/4" = 1'-0"

GENERAL NOTES:

1. POWER, ANALOG, AND DISCRETE CONDUCTORS SHALL BE ROUTED IN SEPARATE CONDUITS.
2. SUPPORTING HARDWARE AND FASTENERS SHALL BE 316 STAINLESS STEEL.
3. CONTRACTOR SHALL COORDINATE LOCATION OF CONDUIT STUB-UPS AT MOTOR OPERATED VALVE WITH EQUIPMENT MANUFACTURER.
4. CAP AND PROVIDE A PULL STRING IN SPARE CONDUIT.
5. THE CONTRACTOR SHALL BE RESPONSIBLE FOR SIZING AND PROVIDING ALL PULL BOXES AND JUNCTION BOXES AS REQUIRES BY THE NATIONAL ELECTRICAL CODE.

NOTES BY SYMBOL "⬡"

1. RE: 3/E-19 FOR DETAIL ON CONDUIT TRANSITION TO WET WELL.
2. SUBMERSIBLE CABLE TERMINATION CABINET. RE: 2/E-19 FOR DETAIL.
3. RE: 4/E-20 FOR EQUIPMENT RACK DETAIL.
4. PROVIDE FLOAT SWITCH "LSLL-101". RE: 2/E-20 FOR FLOAT SWITCH CABLING DETAIL.
5. PROVIDE SUBMERSIBLE LEVEL TRANSDUCER "LPE-101".
6. LEVEL INSTRUMENT TERMINATION CABINET.
7. PROVIDE A RACK MOUNTED 316 STAINLESS STEEL PUSH BUTTON STATION. PROVIDE AN E.STOP FOR EACH PUMP. REFER TO SPECIFICATION 40 90 02 FOR PUSH BUTTON STATION REQUIREMENTS.

NORTH

0 1' 2' 4' 8'
1/4"=1'-0"

ISSUED FOR BID

Freese and Nichols, Inc.
Texas Registered Engineering Firm F-2144

STATE OF TEXAS
REBECCA SANDOVAL
102369
LICENSED
PROFESSIONAL ENGINEER
01/26/2022

FREESE AND NICHOLS
10497 Town and Country Way,
Suite 600
Houston, Texas 77024
Phone - (713) 600-6800
Web - www.freese.com

CITY OF BEAUMONT
COLLIER'S FERRY PUMP STATION

ELECTRICAL
PUMP STATION
INSTRUMENTATION & CONTROLS PLAN

NO.	ISSUE	BY	DATE

F&N JOB NO. BM120326
DATE 01/07/2022
DESIGNED DJD
DRAWN JTR
REVISED
CHECKED JNH
FILE NAME EL-ALL-PL-CTRL02.dwg

VERIFY SCALE 0 1
Bar is one inch on original drawing. If not one inch on this sheet, adjust scale.

SHEET E-9
SEQ. 123

ACAD Rel: 24.0s (LMS Tech)
Filename: N:\ELEC\EL-ALL-PL-CTRL02.dwg
Last Saved: 1/19/2022 1:58 PM Saved By: 03823

Plot Date: 1/26/2022 12:50 PM Plot By: 03644 Filename: N:\ELEC\EL-ALL-PL-CTRL02.dwg

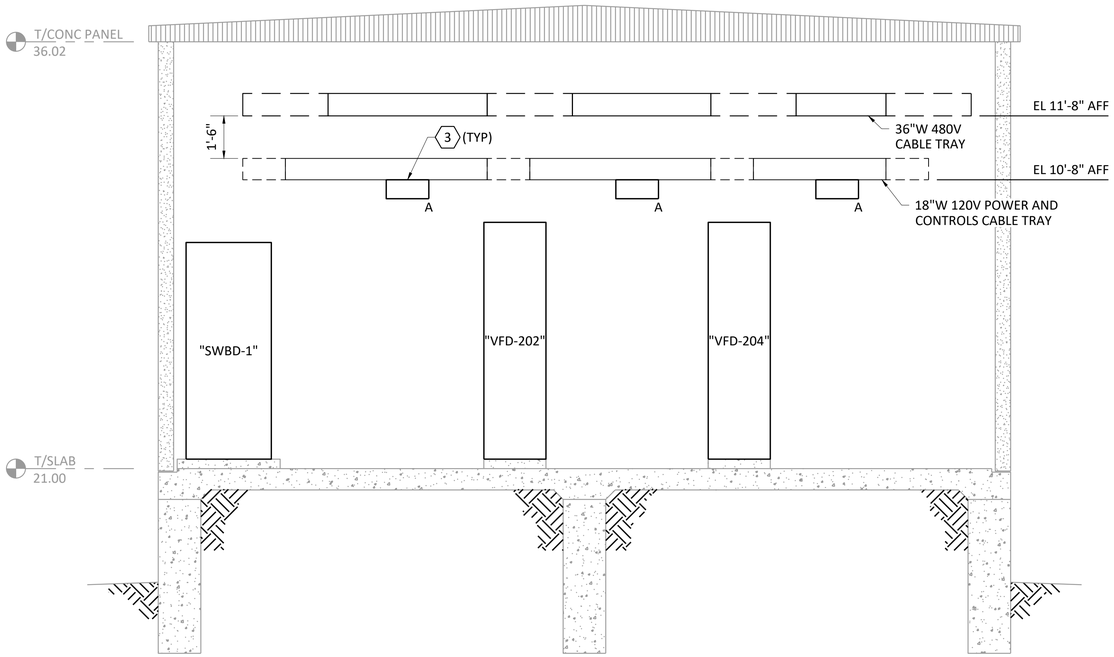

1 / - ELECTRICAL BUILDING SECTION

3/8" = 1'-0"

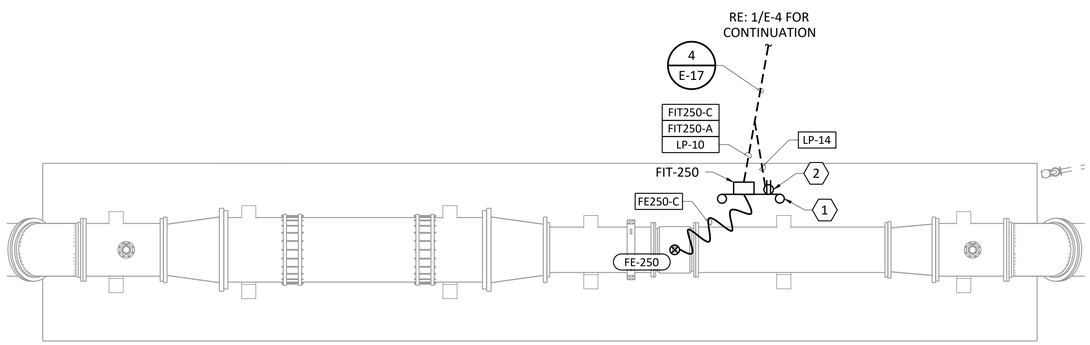

2 / - METER RUN PLAN

3/16" = 1'-0"

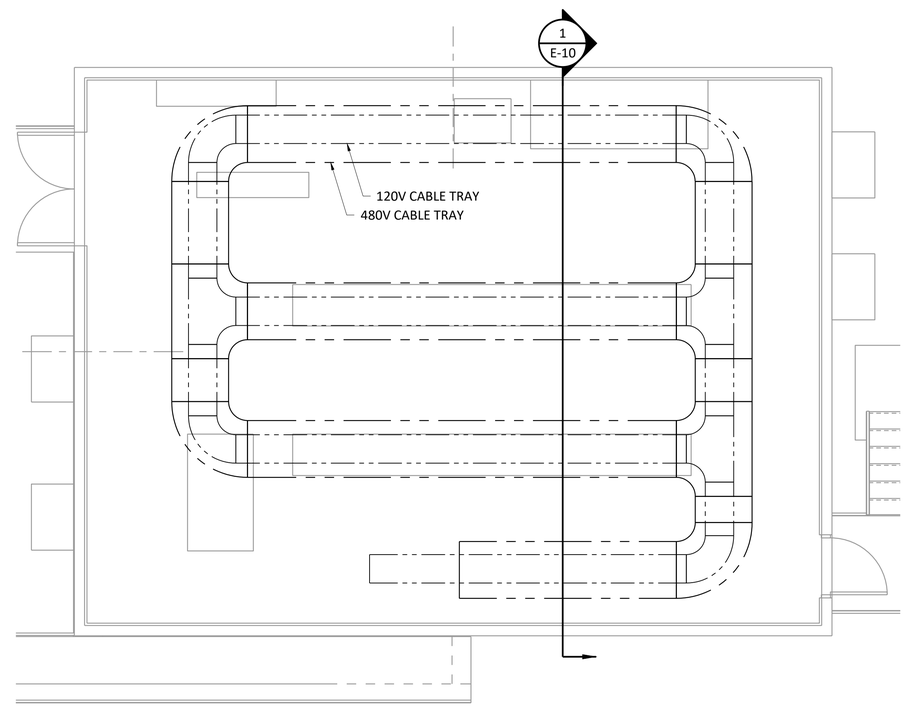

3 / - ELECTRICAL BUILDING CABLE TRAY PLAN

1/4" = 1'-0"

GENERAL NOTES:

1. POWER, ANALOG, AND DISCRETE CONDUCTORS SHALL BE ROUTED IN SEPARATE CONDUITS.
2. ALL LIGHTING AND RECEPTACLE WIRING SHALL BE 2 #14, #14G., 3/4"C. UNLESS NOTED OTHERWISE.

NOTES BY SYMBOL "⬡"

1. PROVIDE ELECTRICAL EQUIPMENT RACK. RE: 4/E-20 FOR DETAIL.
2. PROVIDE A RACK MOUNTED WATERPROOF, GFI RECEPTACLE.
3. EMERGENCY LIGHTS IN ELECTRICAL ROOM SHALL BE NON-SWITCHED AND SHALL BE CONNECTED TO THE LIGHTING CIRCUIT FOR THE ROOM.

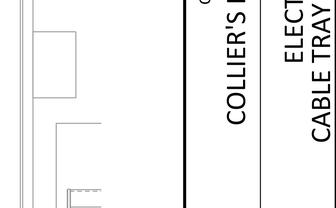

Freese and Nichols, Inc.
Texas Registered Engineering Firm F-2144

FREESE AND NICHOLS
10497 Town and Country Way,
Suite 600
Houston, Texas 77024
Phone - (713) 600-6800
Web - www.freese.com

CITY OF BEAUMONT
COLLIER'S FERRY PUMP STATION

ELECTRICAL
ELECTRICAL BUILDING
CABLE TRAY AND METER RUN PLAN

F&N JOB NO.	BMT20326
DATE	01/07/2022
DESIGNED	DJD
DRAWN	JTR
REVISED	-
CHECKED	JNH
FILE NAME	EL-PST-SC-BLDG.dwg

NO.	ISSUE	BY	DATE

VERIFY SCALE Bar is one inch on original drawing. If not one inch on this sheet, adjust scale.
0 1

NORTH

0 1' 2' 4'
3/8"=1'-0

0 4' 8'
3/16"=1'-0"

0 1' 2' 4' 8'
1/4"=1'-0"

ISSUED FOR BID

SHEET E-10

SEQ. 124

ACAD Rel: 24.0s (LMS Tech)
Filename: N:\ELEC\EL-PST-SC-BLDG.dwg
Last Saved: 1/19/2022 1:58 PM Saved By: 03823

Plot Date: 1/26/2022 12:50 PM Plot By: 03644 Filename: N:\ELEC\EL-PST-SC-BLDG.dwg

GENERAL NOTES:

1. CONDUIT SIZES ARE MINIMUM SIZE. PROVIDE LARGER SIZE CONDUIT WHERE INDICATED IN DUCT BANK DETAILS/PLAN SHEETS.

NOTES BY SYMBOL "⬡"

1. SUBMERSIBLE CABLE TERMINATION CABINET.
2. ENCLOSURE MOUNTED METERING UNIT. COORDINATE REQUIREMENTS WITH ENTERGY.
3. SIZE BREAKER ASSOCIATED WITH SPD AS REQUIRES AND PROVIDE PROPERLY SIZED CABLE.
4. BREAKER TO BE 100% RATED FOR 3000A.
5. GENERATOR SIZE LISTED IS A MINIMUM. REFER TO DIVISION 26 32 13 FOR GENERATOR SIZING SPECIFICATIONS.
6. ALL DISCONNECT SWITCHES SHALL BE NEMA 4X 316 STAINLESS STEEL.

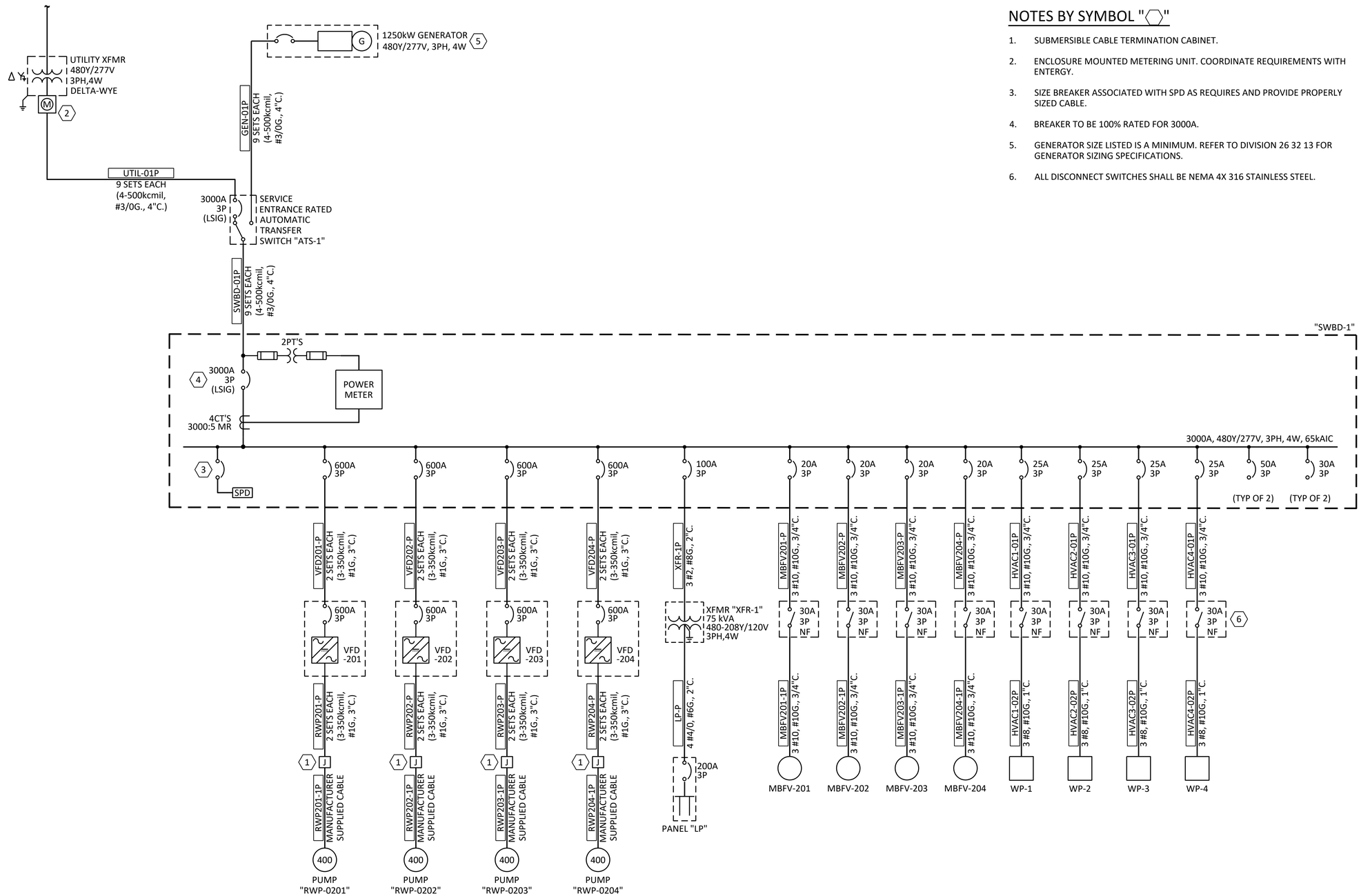

1 - 480V ONE-LINE DIAGRAM

NOT TO SCALE

ISSUED FOR BID

Freese and Nichols, Inc.
Texas Registered Engineering Firm F-2144

STATE OF TEXAS
REBECCA SANDOVAL
102369
LICENSED
PROFESSIONAL ENGINEER
01/26/2022

FREESE AND NICHOLS
10497 Town and Country Way,
Suite 600
Houston, Texas 77024
Phone - (713) 600-6800
Web - www.freese.com

CITY OF BEAUMONT
COLLIER'S FERRY PUMP STATION
ELECTRICAL
480V ONE-LINE DIAGRAM

NO.	ISSUE	BY	DATE

F&N JOB NO. BMT20326
DATE 01/07/2022
DESIGNED DJD
DRAWN JTR
REVISED -
CHECKED JNH
FILE NAME EL-ALL-DG-ONE101.dwg

VERIFY SCALE 0 1
Bar is one inch on original drawing. If not one inch on this sheet, adjust scale.

SHEET E-11
SEQ. 125

ACAD Rel: 24.0s (LMS Tech)
Filename: N:\ELEC\EL-ALL-DG-ONEL01.dwg
Last Saved: 1/19/2022 6:25 PM Saved By: 03644

Plot Date: 1/26/2022 12:50 PM Plot By: 03644 Filename: N:\ELEC\EL-ALL-DG-ONEL01.dwg

GENERAL NOTES:

1. EQUIPMENT DIMENSIONS SHOWN ARE MAXIMUM ALLOWED.
2. ALL EQUIPMENT SHALL BE FRONT ACCESSIBLE ONLY.

NOTES BY SYMBOL "⬡"

1. MOUNT POWER METER A MAXIMUM OF 5'-6" AFF, INCLUDE THE HOUSEKEEPING PAD IN THE TOTAL MOUNTING HEIGHT.
2. RE: 1/E-11 480V ONE-LINE DIAGRAM FOR BREAKER SIZES.
3. MOUNT VFD HMI DISPLAY, INDICATING LIGHTS, PUSHBUTTONS, SWITCHES, ETC. A MAXIMUM OF 5'-6" AFF, INCLUDE THE HOUSEKEEPING PAD IN THE TOTAL MOUNTING HEIGHT.

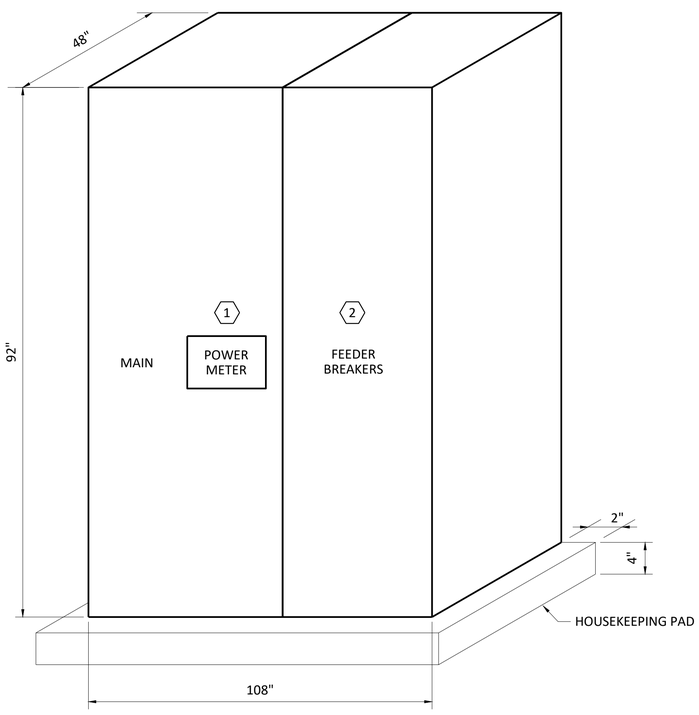

1 - 480V SWITCHBOARD "SWBD-1" ELEVATION

NOT TO SCALE

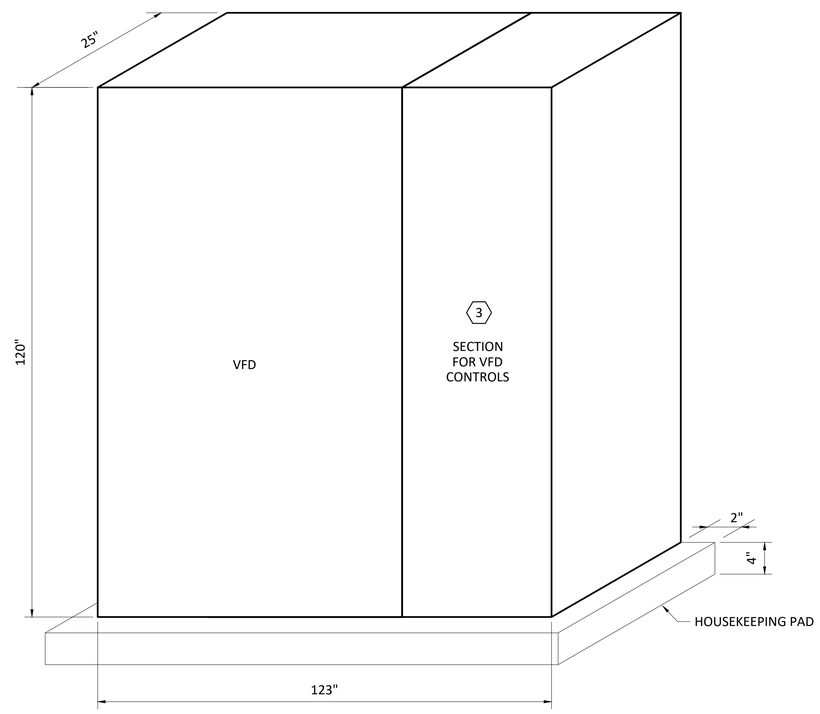

2 - 480V VFD ELEVATION

NOT TO SCALE (TYP "VFD-201", "VFD-202", "VFD-203", "VFD-204)

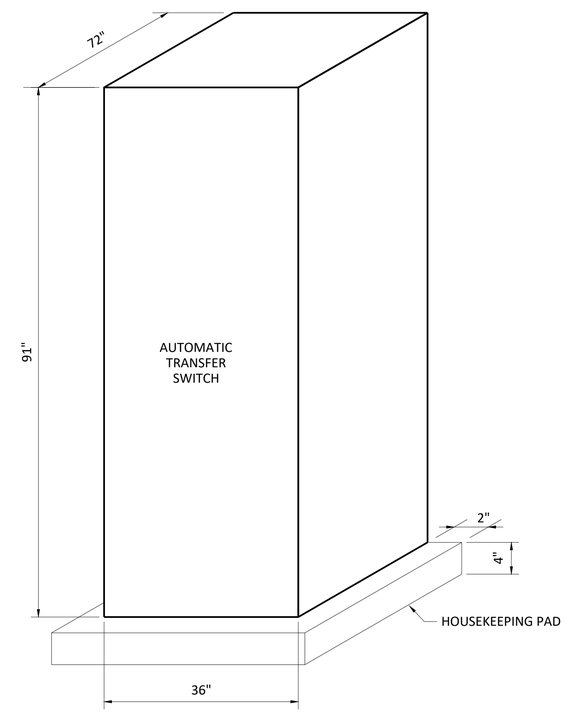

3 - AUTOMATIC TRANSFER SWITCH "ATS-1" ELEVATION

NOT TO SCALE

ISSUED FOR BID

Freese and Nichols, Inc.
Texas Registered Engineering Firm F-2144

STATE OF TEXAS
REBECCA SANDOVAL
102369
LICENSED
PROFESSIONAL ENGINEER
01/26/2022

FREESE AND NICHOLS

10497 Town and Country Way,
Suite 600
Houston, Texas 77024
Phone - (713) 600-6800
Web - www.freese.com

CITY OF BEAUMONT

COLLIER'S FERRY PUMP STATION

ELECTRICAL

EQUIPMENT ELEVATIONS

F&N JOB NO.	BMT20326
DATE	01/07/2022
DESIGNED	DJD
DRAWN	JTR
REVISED	
CHECKED	JNH
FILE NAME	EL-ALL-EL-EQPT01.dwg

NO.	ISSUE	BY	DATE

VERIFY SCALE 0 1 Bar is one inch on original drawing, if not one inch on this sheet, adjust scale.

SHEET E-12

SEQ. 126

ACAD Rel: 24.0s (LMS Tech)
Filename: N:\ELEC\EL-ALL-EL-EQPT01.dwg
Last Saved: 1/19/2022 1:59 PM Saved By: 03823

Plot Date: 1/26/2022 12:50 PM Plot By: 03644 Filename: N:\ELEC\EL-ALL-EL-EQPT01.dwg

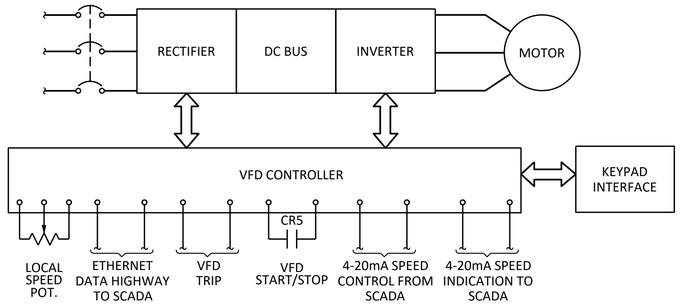

1 - VFD BLOCK DIAGRAM

NOT TO SCALE

GENERAL NOTES:

1. ALL RELAY CONTACTS TO HAVE A CONTINUOUS AND INTERRUPTING RATING SIZED FOR THE LOAD.
2. THE CONTROL SCHEMATIC SHOWN TO BE INCORPORATED INTO THE VFD MOTOR CONTROLS BY THE VFD SUPPLIER.
3. EQUIPMENT SHOWN WITH A DASHED BOX IS NOT PROVIDED BY THE VFD SUPPLIER.
4. ALL TIMING RELAYS (TR1, TR2) TO BE FIELD ADJUSTABLE.
5. THE VALVE LIMIT SWITCHES SHOWN IN THE CONTROL SCHEMATIC REPRESENT THE VALVE BEING IN THE FULLY CLOSED POSITION.

NOTES BY SYMBOL "⬡"

1. THE FOLLOWING INFORMATION TO BE TRANSMITTED OVER THE ETHERNET DATA HIGHWAY BETWEEN THE VFD AND PUMP STATION PLC:
   COMMANDS: VFD START, VFD STOP, SPEED CONTROL
   STATUS: VFD RUN STATUS, VFD TRIP, SPEED FEEDBACK
2. FROM LEVEL RELAY PANEL. RE: 2/E-14.
3. FROM PUMP DISCHARGE PRESSURE PANEL. RE: 3/E-14.
4. BASE PUMP MONITOR PROVIDED BY PUMP SUPPLIER AND SHIPPED TO VFD SUPPLIER TO BE INSTALLED AS PART OF THE VFD MOTOR CONTROLS. PROVIDE PROPER POWER SUPPLY.
5. INTERNAL PUMP ELECTRONIC MODULE FOR LEAK DETECTION, VIBRATION, AND BEARING/WINDING TEMPERATURE.
6. PUMP MONITORING SENSOR MODULE AT THE PUMP MOTOR.

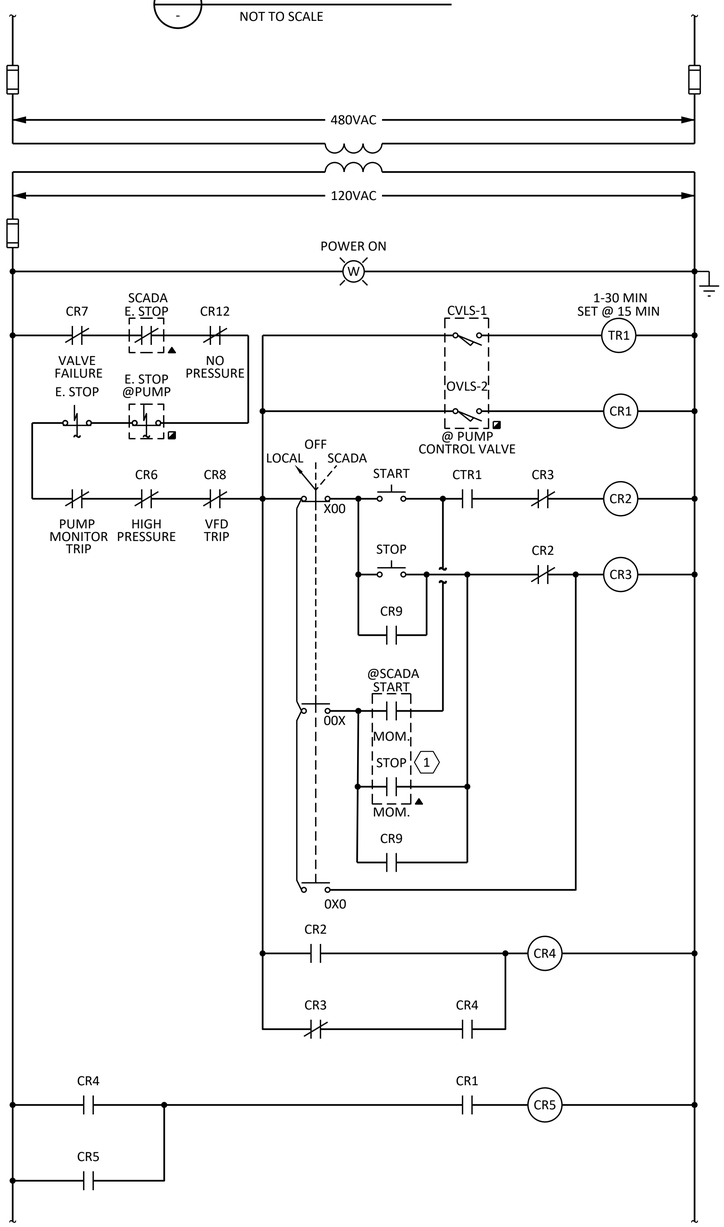

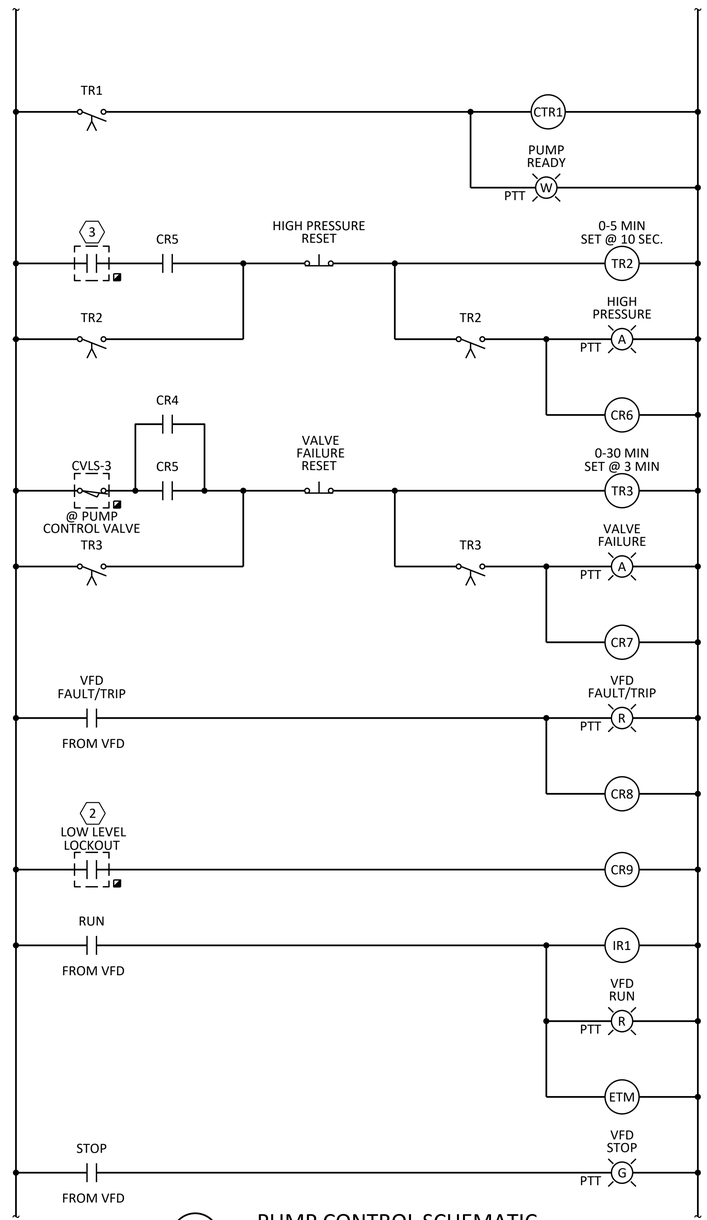

2 - PUMP CONTROL SCHEMATIC

NOT TO SCALE (TYP FOR "VFD-201, "VFD-202", "VFD-203", "VFD-204")

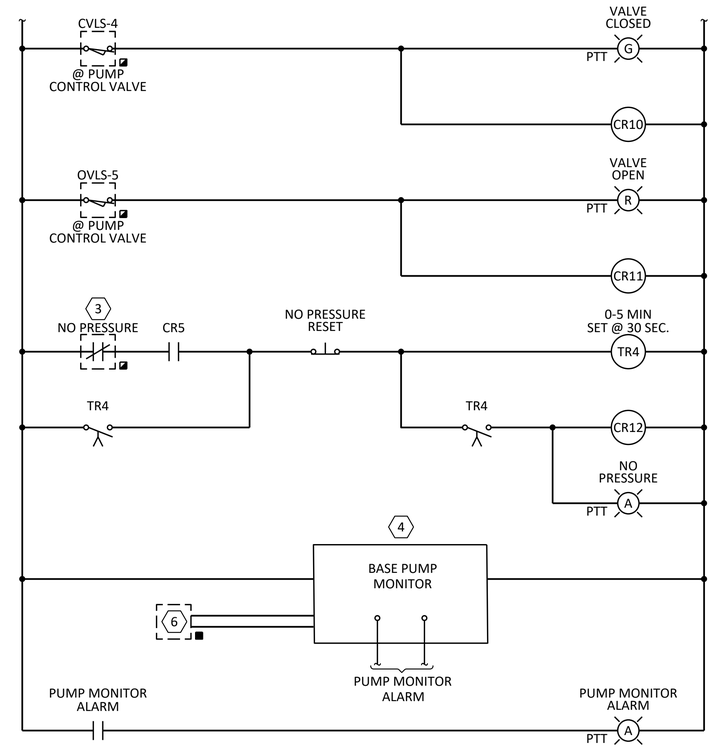

LIMIT SWITCH POSITIONS

SWITCH NUMBERS	VALVE POSITION: LIMIT CLOSE 0%	INTERMEDIATE 5%	50%	95%	LIMIT OPEN 100%	FUNCTION (PERCENT OPEN)
CVLS-1	■					START PERMISSIVE
OVLS-2		■	■	■	■	START/STOP COMMAND
CVLS-3	■	■	■	■		VALVE FAIL
CVLS-4	■	■	■	■		VALVE CLOSED
OVLS-5		■	■	■	■	VALVE OPEN

NOTES:
1. —— INDICATES OPEN CONTACTS.
2. ▬ INDICATES CLOSED CONTACTS.

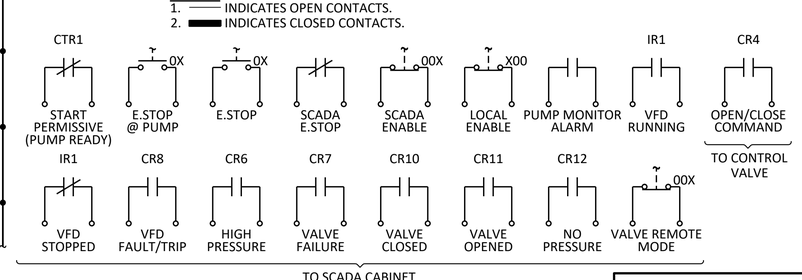

ISSUED FOR BID

Freese and Nichols, Inc.
Texas Registered Engineering Firm F-2144

REBECCA SANDOVAL
102369
LICENSED
PROFESSIONAL ENGINEER
STATE OF TEXAS
01/26/2022

FREESE AND NICHOLS
10497 Town and Country Way,
Suite 600
Houston, Texas 77024
Phone - (713) 600-6800
Web - www.freese.com

CITY OF BEAUMONT
COLLIER'S FERRY PUMP STATION

ELECTRICAL

PUMP CONTROL SCHEMATIC

F&N JOB NO.	BMT20326
DATE	01/07/2022
DESIGNED	DJD
DRAWN	JTR
REVISED	-
CHECKED	JNH
FILE NAME	EL-ALL-SM-CTRL01.dwg

NO.	ISSUE	BY	DATE

VERIFY SCALE 0 1
Bar is one inch on original drawing. If not one inch on this sheet, adjust scale.

SHEET E-13

SEQ. 127

ACAD Rel: 24.0s (LMS Tech)
Filename: N:\ELEC\EL-ALL-SM-CTRL01.dwg
Last Saved: 1/25/2022 7:30 PM Saved By: 03644

Plot Date: 1/26/2022 12:50 PM Plot By: 03644 Filename: N:\ELEC\EL-ALL-SM-CTRL01.dwg

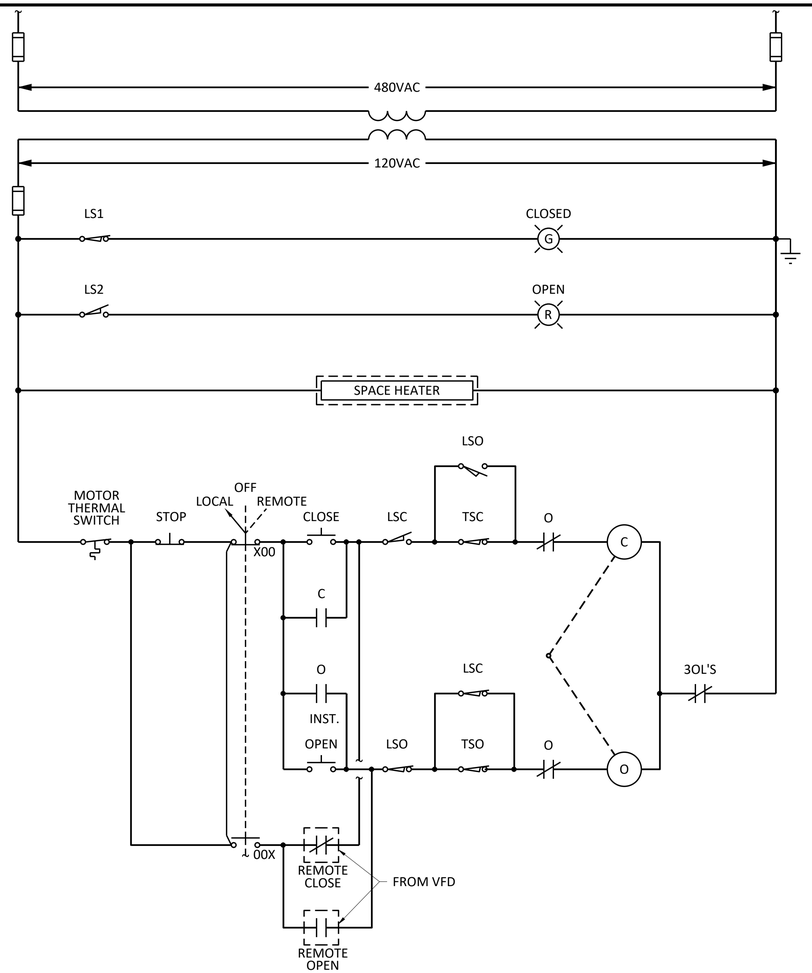

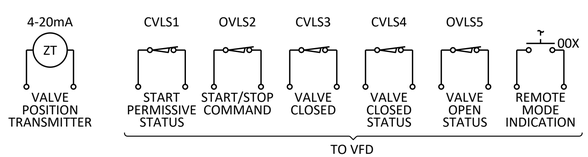

LIMIT SWITCH POSITIONS

SWITCH NUMBERS	VALVE POSITION: LIMIT CLOSE (0%)	INTERMEDIATE (5%, 50%)	LIMIT OPEN (95%, 100%)	FUNCTION (PERCENT OPEN)
CVLS-1	■			START PERMISSIVE
OVLS-2		■	■	START/STOP COMMAND
CVLS-3	■	■	■	VALVE CLOSED
CVLS-4	■	■	■	VALVE CLOSED
OVLS-5		■	■	VALVE OPEN

NOTES:
1. —— INDICATES OPEN CONTACTS.
2. ■ INDICATES CLOSED CONTACTS.

NO.1 GENERAL NOTES:
1. THE CONTROL SCHEMATIC SHOWN SHALL BE INCORPORATED INTO MBFV CONTROLS BE MBFV SUPPLIER.

1 / - MOTOR OPERATED PUMP CONTROL VALVE CONTROL SCHEMATIC
NOT TO SCALE

NOTES BY SYMBOL "⬡"

1. REFER TO SPECIFICATION 40 90 02 FOR ADDITIONAL INFORMATION ON PROCESS PANELS.
2. PROVIDE PROGRAMMABLE LOOP MONITOR/ALARM DEVICE, MOORE INDUSTRIES MODEL SPA OR APPROVED EQUAL. DEVICE SHALL RE-TRANSMIT 4-20mA PRESSURE TRANSMITTER SIGNAL TO PLC. ALL ALARM RELAY OUTPUTS AND ANALOG INPUTS/OUTPUTS SHALL BE WIRED TO TERMINAL BLOCKS FOR FIELD CONNECTIONS. CONTRACTOR SHALL PROGRAM DEVICES AS REQUIRED AND PROVIDE OWNER WITH COPY OF SOFTWARE PROGRAM. SET THE HIGH PRESSURE RELAY TO OPERATE AT 100PSI. COORDINATE WITH THE OWNER/ENGINEER FOR THE EXACT SETPOINT OF THE NO PRESSURE RELAY.
3. FROM LEVEL RELAY JUNCTION BOX AT WET WELL.

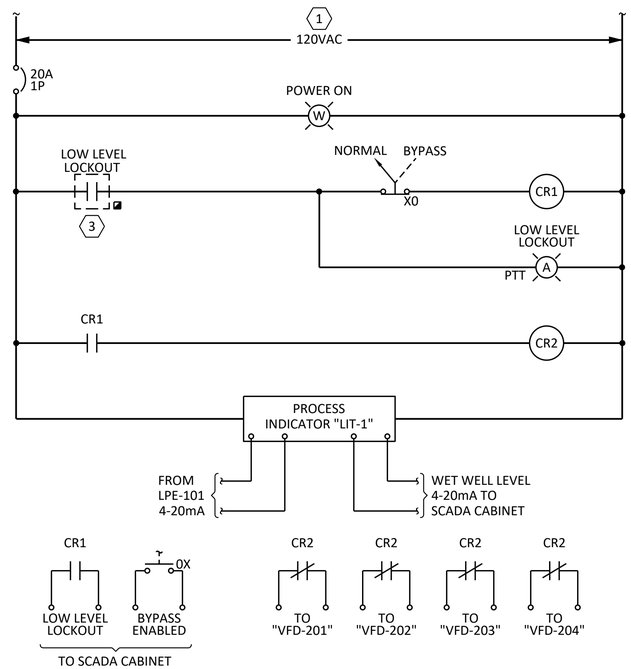

2 / - LEVEL RELAY PANEL CONTROL SCHEMATIC
NOT TO SCALE

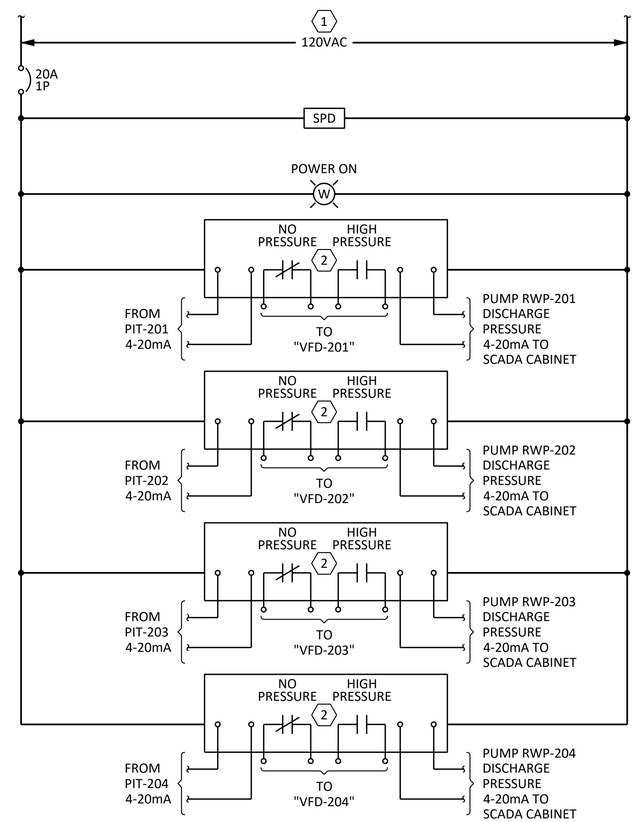

3 / - PUMP DISCHARGE PRESSURE PANEL CONTROL SCHEMATIC
NOT TO SCALE

ISSUED FOR BID

Freese and Nichols, Inc.
Texas Registered Engineering Firm F-2144

STATE OF TEXAS
REBECCA SANDOVAL
102369
LICENSED
PROFESSIONAL ENGINEER
01/26/2022

FREESE AND NICHOLS
10497 Town and Country Way,
Suite 600
Houston, Texas 77024
Phone - (713) 600-6800
Web - www.freese.com

CITY OF BEAUMONT
COLLIER'S FERRY PUMP STATION
ELECTRICAL
CONTROL SCHEMATICS I

F&N JOB NO.	BMT20326
DATE	01/07/2022
DESIGNED	DJD
DRAWN	JTR
REVISED	-
CHECKED	JNH
FILE NAME	EL-ALL-SM-CTRL02.dwg

NO.	ISSUE	BY	DATE

VERIFY SCALE 0 1
Bar is one inch on original drawing. If not one inch on this sheet, adjust scale.

SHEET E-14
SEQ. 128

ACAD Rel: 24.0s (LMS Tech)
Filename: N:\ELEC\EL-ALL-SM-CTRL02.dwg
Last Saved: 1/19/2022 2:07 PM Saved By: 03644

Plot Date: 1/26/2022 12:50 PM Plot By: 03644 Filename: N:\ELEC\EL-ALL-SM-CTRL02.dwg

PANEL NO. LP — MAIN 200 AMPS M.C.B. — LOCATION ELECTRICAL BUILDING

SERVICE VOLTAGE 208Y/120 VOLTS — BUS RATING 225 AMPS

A.I.C. 65,000 — NEUTRAL BUS 225 AMPS — FEED FROM "SWBD-1" VIA "XFR-1"

DESCRIPTION	BREAKER POLE	BREAKER AMP	VOLT AMPS A	VOLT AMPS B	VOLT AMPS C	CKT NO	BUSS CONN	CKT NO	VOLT AMPS A	VOLT AMPS B	VOLT AMPS C	BREAKER POLE	BREAKER AMP	DESCRIPTION
ELECTRICAL BUILDING INTERIOR RECEPTACLES	1	20	720			1		2	500			1	20	ELECTRICAL BUILDING EXTERIOR RECEPTACLES
ELECTRICAL BUILDING INTERIOR RECEPTACLES	1	20		720		3		4		500		1	20	ELECTRICAL BUILDING EXTERIOR RECEPTACLES
PUMP STATION RECEPTACLE	1	20			360	5		6			500	1	20	PUMP STATION LIGHTING
RTU PANEL	1	20	1000			7		8	500			1	20	SITE LIGHTING
LEVEL RELAY PANEL	1	20		700		9		10		500		1	20	FLOW METER
PRESSURE RELAY PANEL	1	20			700	11		12			500	1	20	ELECTRICAL BUILDING EXTERIOR LIGHTING
GENERATOR PANEL	3		4500			13		14	1000			1	20	METER RACK RECEPTACLE
				4500		15		16		720		1	20	DATA RACK QUAD RECEPTACLE
		60			4500	17		18			1000	1	20	SPARE
SPARE	1	20	1000			19		20	1000			3		SPARE
SPARE	1	20		1000		21		22		1000				
SPARE	1	20			1000	23		24			1000		20	
SPARE	1	20	1000			25		26						SPACE
SPARE	1	20		1000		27		28						SPACE
SPARE	1	20			1000	29		30						SPACE
SPARE	1	20	1000			31		32						SPACE
SPARE	1	20		1000		33		34						SPACE
SPARE	1	20			1000	35		36						SPACE
SPARE	1	20	1000			37		38				3		SPD
SPARE	1	20		1000		39		40						
SPARE	1	20			1000	41		42					20	
CONNECTED BUS A 13,220 VA			10220	9920	9560				3000	2720	3000			DEMAND KVA: 38.4
CONNECTED BUS B 12,640 VA							TOTAL: 38420 VA							DEMAND AMPS: 106.6
CONNECTED BUS C 12,560 VA														NOTE: * INDICATES GFI BREAKER

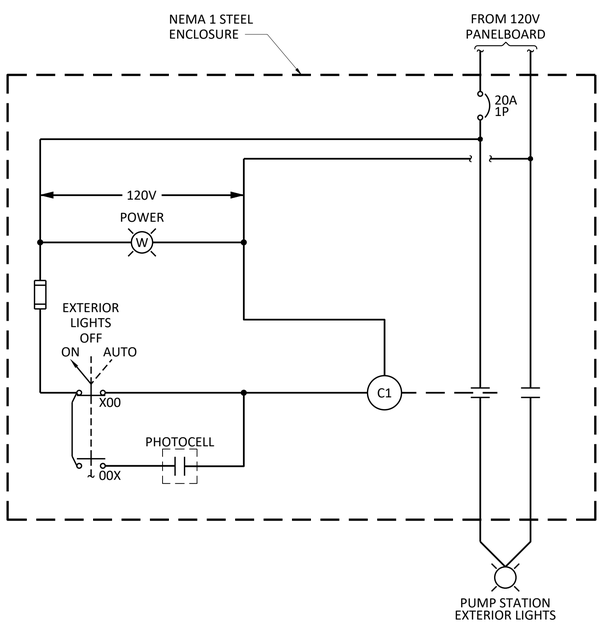

NO.1 GENERAL NOTES:

1. CONTACTS SHALL BE RATED FOR 30 AMPS AT 120V.
2. PROVIDE SPARE CONTACTS FOR EACH CONTACTOR.

1 / - EXTERIOR LIGHTING CONTACTOR CONTROL SCHEMATIC

NOT TO SCALE

LIGHTING FIXTURE SCHEDULE

TYPE	MANUFACTURER	CATALOG NO.	VOLT.	DESCRIPTION	INPUT WATTS
A	HOLOPHANE	EMS L48 4000LM LPPFL MD MVOLT 35K 90CRI	120	LINEAR LED FIXTURE 48" LENGTH, 4000 LUMEN, 3500K, MEDIUM DISTRIBUTION, LOW PROFILE POLYCARBONATE FROSTED LENS	24
AE	HOLOPHANE	EMS L48 4000LM LPPFL MD MVOLT 35K 90CRI E10WMCP	120	LINEAR LED FIXTURE 48" LENGTH, 4000 LUMEN, 3500K, MEDIUM DISTRIBUTION, LOW PROFILE POLYCARBONATE FROSTED LENS, 10W EMERGENCY BATTERY BACKUP	24
L2	HOLOPHANE	EMS L48 3000LM LPPFL MD MVOLT 35K 90CRI	120	LINEAR LED FIXTURE 48" LENGTH, 3000 LUMEN, 3500K, MEDIUM DISTRIBUTION, LOW PROFILE POLYCARBONATE FROSTED LENS, 10W EMERGENCY BATTERY BACKUP	19
S	HOLOPHANE	MGLED P1 40K MVOLT AG VH BKSD POLE: DSF10 FPGV BK	120	LED AREA LIGHT WITH DIE-CAST ALUMINUM HOUSING, 15,400 LUMENS, 4000K ADJUSTABLE TENON MOUNT; POLE: 20' HINGED SQUARE STEEL POLE, BLACK	105
W	HOLOPHANE	W4GLED-20C700-40K-T3M-120-SPD-ELCW-BKSDP	120	WALLPACK LED IN DIE CAST ALUMINUM HOUSING, 20 LED, MEDIUM DISTRIBUTION, BLACK	45
XE	LITHONIA	LHQM-LED-S-W-HO-RO	120	EXIT LIGHT WITH EMERGENCY FROG-EYES IN THERMOPLASTIC HOUSING, BACKUP HIGH-OUTPUT BATTERY	8

LIGHTING FIXTURE SCHEDULE NOTES:

1 LIGHT FIXTURES PROVIDED SHALL BE APPROVED EQUAL TO THE FIXTURE INDICATED IN THE SCHEDULE ABOVE.

2 FIXTURE MODEL NUMBERS ARE USED TO ESTABLISH MINIMUM QUALITY AND PERFORMANCE STANDARDS AND NOT TO ESTABLISH MOUNTING TYPE. MOUNTING REQUIREMENTS MAY VARY FOR THE SAME TYPE OF FIXTURE THROUGHOUT THE PROJECT. CONTRACTOR SHALL VERIFY INSTALLATION LOCATION AND PROVIDE APPROPRIATE MOUNTING HARDWARE FIXTURE TYPE DESIGN FOR EACH LOCATION.

ISSUED FOR BID

Freese and Nichols, Inc.
Texas Registered Engineering Firm F-2144

STATE OF TEXAS — REBECCA SANDOVAL — 102369 — LICENSED PROFESSIONAL ENGINEER — 01/26/2022

FREESE AND NICHOLS
10497 Town and Country Way,
Suite 600
Houston, Texas 77024
Phone - (713) 600-6800
Web - www.freese.com

CITY OF BEAUMONT

COLLIER'S FERRY PUMP STATION

ELECTRICAL

CONTROL SCHEMATICS II & SCHEDULES

NO.	ISSUE	BY	DATE

F&N JOB NO. BMT20326
DATE 01/07/2022
DESIGNED DJD
DRAWN JTR
REVISED -
CHECKED JNH
FILE NAME EL-ALL-SM-CTRL03.dwg

VERIFY SCALE 0 1 — Bar is one inch on original drawing. If not one inch on this sheet, adjust scale.

SHEET E-15

SEQ. 129

ACAD Rel: 24.0s (LMS Tech)
Filename: N:\ELEC\EL-ALL-SM-CTRL03.dwg
Last Saved: 1/26/2022 12:46 PM Saved By: 03644
Plot Date: 1/26/2022 12:51 PM Plot By: 03644 Filename: N:\ELEC\EL-ALL-SM-CTRL03.dwg

INTERCONNECTION DIAGRAM

LOOP	EQUIPMENT DESCRIPTION	FIELD DEVICE/FIELD WIRING
101	WET WELL LEVEL	LPE-101 — LPE101-A MANUFACTURER'S CABLE — (1) J — LPE101-1A 2PR. #18 SHLD., 1"C. (1PR. SPARE) — (4) LEVEL RELAY PANEL "LRP-01" — LRP-C 6 #14, #14G., 1"C. (2 #14 SPARE)
	WET WELL LOW LEVEL LOCKOUT	LSLL-101 — LSLL101-C MANUFACTURER'S CABLE — J — LSLL101-1C 1-5/C #14, 1"C. — LRP-A 2PR. #18 SHLD., 1"C. (1PR. SPARE)
		PMU201-COM 2-CAT6, 1"C. (1-CAT6 SPARE)
		VFD201-1C 2-24/C #14, 2"C.
201	PUMP NO.1 THERMAL SWITCH/LEAK DETECTION	RWP201-TS/LD — RWP201-C MANUFACTURER'S CABLE — (2) J — RWP201-1C 1-5/C #14, 1"C. — VFD201-COM 1-CAT6, 1"C.
	RWP-201 E.STOP AT WET WELL	E.STOP — ESTOPRWP201-C 1-5/C #14, 1"C. — VFD-201 — LRP-201C 1-5/C #14, 1"C. — TO LEVEL RELAY PANEL
	RWP-201 PUMP CONTROL VALVE	MBFV-201 — MBFV201-1C 1-19/C #14, 2"C. — PRP-201C 1-5/C #14, 1"C. — (3)
		MBFV201-1A 2PR. #18 SHLD., 1"C. (1PR. SPARE)
		PMU202-COM 2-CAT6, 1"C. (1-CAT6 SPARE)
		VFD202-1C 2-24/C #14, 2"C.
202	PUMP NO.2 THERMAL SWITCH/LEAK DETECTION	RWP201-TS/LD — RWP202-C MANUFACTURER'S CABLE — (2) J — RWP202-1C 1-5/C #14, 1"C. — VFD202-COM 1-CAT6, 1"C.
	RWP-202 E.STOP AT WET WELL	E.STOP — ESTOPRWP202-C 1-5/C #14, 1"C. — VFD-202 — LRP-202C 1-5/C #14, 1"C. — TO LEVEL RELAY PANEL
	RWP-202 PUMP CONTROL VALVE	MBFV-202 — MBFV202-1C 1-19/C #14, 2"C. — PRP-202C 1-5/C #14, 1"C. — (3)
		MBFV202-1A 2PR. #18 SHLD., 1"C. (1PR. SPARE)
		PMU203-COM 2-CAT6, 1"C. (1-CAT6 SPARE)
		VFD203-1C 2-24/C #14, 2"C.
203	PUMP NO.3 THERMAL SWITCH/LEAK DETECTION	RWP203-TS/LD — RWP203-C MANUFACTURER'S CABLE — (2) J — RWP203-1C 1-5/C #14, 1"C. — VFD203-COM 1-CAT6, 1"C.
	RWP-203 E.STOP AT WET WELL	E.STOP — ESTOPRWP203-C 1-5/C #14, 1"C. — VFD-203 — LRP-203C 1-5/C #14, 1"C. — TO LEVEL RELAY PANEL
	RWP-203 PUMP CONTROL VALVE	MBFV-203 — MBFV203-1C 1-19/C #14, 2"C. — PRP-203C 1-5/C #14, 1"C. — (3)
		MBFV203-1A 2PR. #18 SHLD., 1"C. (1PR. SPARE)
		PMU204-COM 2-CAT6, 1"C. (1-CAT6 SPARE)
		VFD204-1C 2-24/C #14, 2"C.
204	PUMP NO.4 THERMAL SWITCH/LEAK DETECTION	RWP204-TS/LD — RWP204-C MANUFACTURER'S CABLE — (2) J — RWP204-1C 1-5/C #14, 1"C. — VFD204-COM 1-CAT6, 1"C.
	RWP-204 E.STOP AT WET WELL	E.STOP — ESTOPRWP204-C 1-5/C #14, 1"C. — VFD-204 — LRP-204C 1-5/C #14, 1"C. — TO LEVEL RELAY PANEL
	RWP-204 PUMP CONTROL VALVE	MBFV-204 — MBFV204-1C 1-19/C #14, 2"C. — PRP-204C 1-5/C #14, 1"C. — (3)
		MBFV204-1A 2PR. #18 SHLD., 1"C. (1PR. SPARE)

RTU

GENERAL NOTES:

1. CONDUIT SIZES ARE MINIMUM SIZE. PROVIDE LARGER SIZE CONDUIT WHERE INDICATED IN DUCT BANK DETAILS/PLAN SHEETS.

NOTES BY SYMBOL "⬡"

1. LEVEL SUBMERSIBLE CABLE TERMINATION CABINET.
2. PUMP SUBMERSIBLE CABLE TERMINATION CABINET.
3. FROM PUMP DISCHARGE PRESSURE PANEL.
4. PROVIDE LEVEL INDICATING TRANSMITTER "LIT-1" LOCATED WITHIN LEVEL RELAY PANEL. REFER TO SPECIFICATION 40 90 01 FOR INFORMATION ON THE LEVEL TRANSMITTER.
5. TO CELLULAR ANTENNA. REFER TO SPECIFICATION 40 90 02 SCADA FOR ANTENNA AND COAX CABLE REQUIREMENTS.
6. CELLULAR RADIO LOCATED WITHIN RTU ENCLOSURE. REFER TO SPECIFICATION 40 90 02 SCADA FOR CELLULAR RADIO REQUIREMENTS.
7. TO CENTRAL PUMP UNIT LOCATED WITHIN THE RTU.

INTERCONNECTION DIAGRAM

LOOP	EQUIPMENT DESCRIPTION	FIELD DEVICE/FIELD WIRING
201	RWP-201 DISCHARGE PRESSURE TRANSMITTER	PIT-201 — PIT201-A 2PR. #18 SHLD., 1"C. (1PR. SPARE) — PUMP DISCHARGE PRESSURE RELAY PANEL "PRP-01" — PRP-A 8PR. #18 SHLD., 2"C.
202	RWP-202 DISCHARGE PRESSURE TRANSMITTER	PIT-202 — PIT202-A 2PR. #18 SHLD., 1"C. (1PR. SPARE)
203	RWP-203 DISCHARGE PRESSURE TRANSMITTER	PIT-203 — PIT203-A 2PR. #18 SHLD., 1"C. (1PR. SPARE)
204	RWP-204 DISCHARGE PRESSURE TRANSMITTER	PIT-204 — PIT204-A 2PR. #18 SHLD., 1"C. (1PR. SPARE)
250	DISCHARGE FLOW METER	FE-250 — FE250-C MANUFACTURER SUPPLIED CABLE — FIT-250 — FIT250-A 2PR. #18 SHLD., 1"C. (1PR. SPARE) — FIT250-C 1-5/C #14, 1"C.
		ATS-COM 1-CAT6, 1"C.
301	AUTOMATIC TRANSFER SWITCH	ATS-1 — ATS-C 1-15/C #14, 2"C.
		GEN-02C 1-5/C #14, 1"C.
302	1250KW GENERATOR	GENERATOR — GEN-01C 1-15/C #14, 2"C.
		GEN-COMM 1-CAT6, 1"C.
311	ELECTRICAL BUILDING INTRUSION ALARM	XS-312 — XS312-1C 2 # 14, #14G., 3/4"C. — XS-311 — XS311-1C 2 #14, #14G., 3/4"C.
	SWITCHBOARD POWER MONITOR	SWBD-1 — SWBD-COM 1-CAT6, 1"C.
		(5) COAX-1 1 COAX, 1"C. — (6) CELLULAR RADIO — CELL-COM 1-CAT6
		CENTRAL PUMP UNIT — CPU-COM 1-CAT6

RTU

ISSUED FOR BID

Freese and Nichols, Inc.
Texas Registered Engineering Firm F-2144

STATE OF TEXAS — REBECCA SANDOVAL — 102369 — LICENSED PROFESSIONAL ENGINEER — 01/26/2022

FREESE AND NICHOLS
10497 Town and Country Way,
Suite 600
Houston, Texas 77024
Phone - (713) 600-6800
Web - www.freese.com

CITY OF BEAUMONT
COLLIER'S FERRY PUMP STATION
ELECTRICAL
INTERCONNECTION DIAGRAM

F&N JOB NO.	BMT20326
DATE	01/07/2022
DESIGNED	DJD
DRAWN	JTR
REVISED	-
CHECKED	JNH
FILE NAME	EL-ALL-DG-INTR01.dwg

NO.	ISSUE	BY	DATE

VERIFY SCALE 0 1 — Bar is one inch on original drawing. If not one inch on this sheet, adjust scale.

SHEET E-16
SEQ. 130

ACAD Rel: 24.0s (LMS Tech)
Filename: N:\ELEC\EL-ALL-DG-INTR01.dwg
Last Saved: 1/25/2022 7:30 PM Saved By: 03644

Plot Date: 1/26/2022 12:51 PM Plot By: 03644 Filename: N:\ELEC\EL-ALL-DG-INTR01.dwg

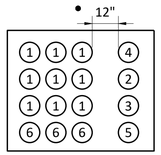

1	GEN-01P	4"C.
2	GEN-01C GEN-02C	2"C.
3	LP-13 15 17	2"C.
4	GEN-COMM	2"C.
5	SPARE	2"C.
6	SPARE	4"C.

1 / - DUCT BANK DETAIL
NOT TO SCALE

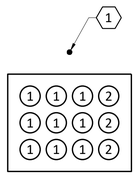

1	UTIL-01P	4"C.
2	SPARE	4"C.

2 / - DUCT BANK DETAIL
NOT TO SCALE

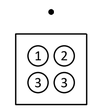

1	LSLL101-1C	2"C.
2	LPE101-1A	2"C.
3	SPARE	2"C.

3 / - DUCT BANK DETAIL
NOT TO SCALE

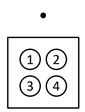

1	LP-10	2"C.
2	FIT250-C	2"C.
3	SPARE	2"C.
4	FIT250-A	2"C.

4 / - DUCT BANK DETAIL
NOT TO SCALE

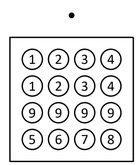

1	RWP-201-P	3"C.
2	RWP-202-P	3"C.
3	RWP-203-P	3"C.
4	RWP-204-P	3"C.
5	RWP-201-1C	3"C.
6	RWP-202-1C	3"C.
7	RWP-203-1C	3"C.
8	RWP-204-1C	3"C.
9	SPARE	3"C.

5 / - DUCT BANK DETAIL
NOT TO SCALE

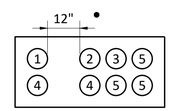

1	MBFV201-P MBFV202-P MBFV203-P MBFV204-P	3"C.
2	MBFV201-1C MBFV202-1C MBFV203-1C MBFV204-1C ESTOPRWP201-C ESTOPRWP202-C ESTOPRWP203-C ESTOPRWP204-C	3"C.
3	PIT201-A PIT202-A PIT203-A PIT204-A MBFV201-1A MBFV202-1A MBFV203-1A MBFV204-1A	3"C.
4	LP-5	3"C.
5	SPARE	3"C.

6 / - DUCT BANK DETAIL
NOT TO SCALE

GENERAL NOTES:

1. DUCT BANKS TO BE IN SEPARATE DUCT BANKS AS SHOWN. COMBINING OF DUCT BANKS IS NOT ALLOWED.
2. PROVIDE ALL ANALOG SIGNALS (4-20MM) AND COMM SIGNALS TO BE ROUTED IN PVC COATED RGS CONDUIT FOR ALL UNDERGROUND APPLICATIONS.

NOTES BY SYMBOL "⬡"

1. #4/0 BARE TINNED COPPER CONDUCTOR RUN ALONG THE TOP OF THE DUCT BANK. TYPICAL FOR ALL DUCT BANKS.

Freese and Nichols, Inc.
Texas Registered Engineering Firm F-2144

STATE OF TEXAS
REBECCA SANDOVAL
102369
LICENSED
PROFESSIONAL ENGINEER
01/26/2022

FREESE AND NICHOLS
10497 Town and Country Way,
Suite 600
Houston, Texas 77024
Phone - (713) 600-6800
Web - www.freese.com

CITY OF BEAUMONT
COLLIER'S FERRY PUMP STATION
ELECTRICAL
DUCT BANK DETAILS I

F&N JOB NO.	BMT20326
DATE	01/07/2022
DESIGNED	DJD
DRAWN	JTR
REVISED	-
CHECKED	JNH
FILE NAME	EL-ALL-DT-DUCT01.dwg

NO.	ISSUE	BY	DATE

VERIFY SCALE 0 1
Bar is one inch on original drawing. If not one inch on this sheet, adjust scale.

SHEET E-17
SEQ. 131

ISSUED FOR BID

ACAD Rel: 24.0s (LMS Tech)
Filename: N:\ELEC\EL-ALL-DT-DUCT01.dwg
Last Saved: 1/19/2022 3:08 PM Saved By: 03644

Plot Date: 1/26/2022 12:51 PM Plot By: 03644 Filename: N:\ELEC\EL-ALL-DT-DUCT01.dwg

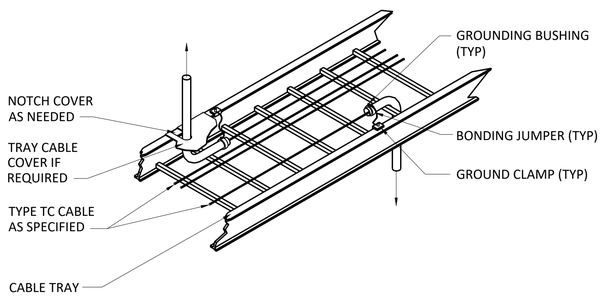

1 - CABLE TRAY SECTION

NOT TO SCALE

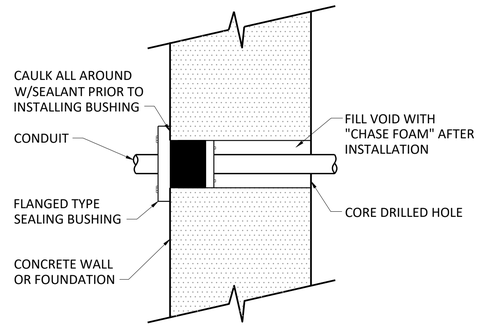

2 - STRUCTURES ABOVE OR BELOW GRADE WATERTIGHT CONDUIT PENETRATION

NOT TO SCALE

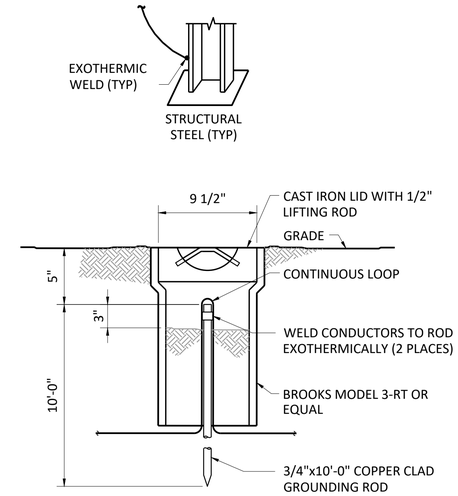

3 - GROUND ROD DETAIL

NOT TO SCALE

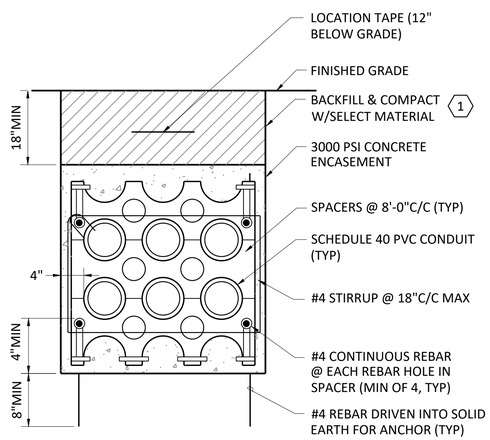

NO.4 GENERAL NOTES:

1. CONTRACTOR SHALL PROVIDE CHAIRS FOR REBAR ROUTED ALONG BOTTOM OF DUCT BANK TO VERIFY THAT REBAR IS FULLY ENCASED WITH 4" OF CONCRETE.

NO.4 NOTES BY SYMBOL "⬡"

1. SELECT BACKFILL TO BE CLASS 4 EARTH FILL. FILL SHALL CONSIST OF MATERIALS WHICH ARE CLASSIFIED AS SP, SM, SC, CL OR DUAL CLASSIFICATIONS THEREOF, WHICH HAVE A LIQUID LIMIT LESS THAN OR EQUAL TO 35 AND A PLASTICITY INDEX OF A MINIMUM OF 4 AND A MAXIMUM OF 15, WHICH ARE FREE OF ORGANIC MATERIALS.

4 - CONCRETE ENCASED DUCT BANK DETAIL

NOT TO SCALE

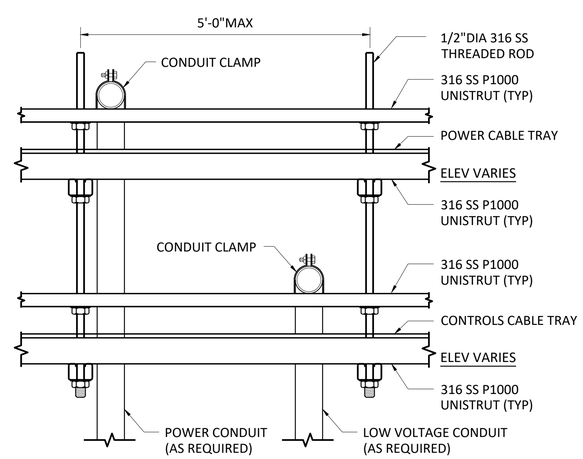

NO.5 GENERAL NOTES:

1. ALL MOUNTING HARDWARE SHALL BE 316 STAINLESS STEEL.
2. TYPICAL FOR CABLE TRAY(S) IN ELECTRICAL AND PUMP ROOMS. RE: STRUCTURAL FOR ADDITIONAL INFORMATION FOR SUPPORTS IN PUMP ROOM.

5 - CABLE TRAY SUPPORT DETAIL SECTION VIEW

NOT TO SCALE

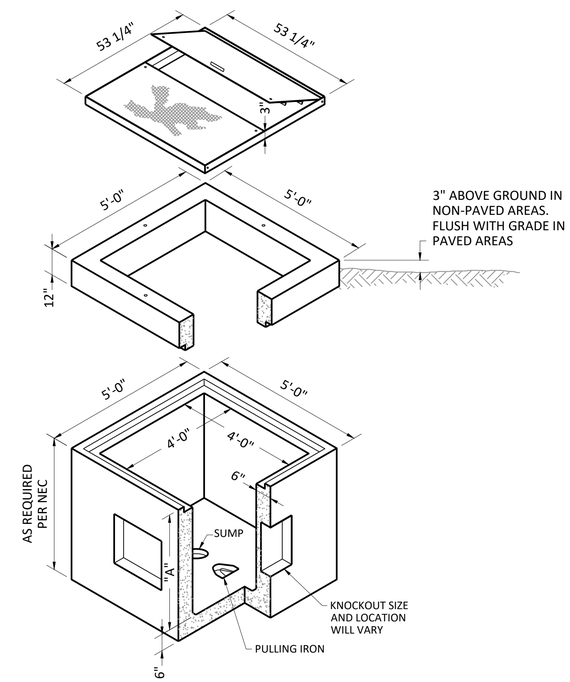

NO.6 GENERAL NOTES:

1. PROVIDE PRECAST CONCRETE PULL BOX PER MANUFACTURER OLDCASTLE PRECAST CAT.#PB-440 OR APPROVED EQUAL.
2. PULL BOX DIMENSIONS INDICATED ARE MINIMUM REQUIRED. THE CONTRACTOR SHALL BE RESPONSIBLE FOR SIZING PULL BOXES PER THE NATIONAL ELECTRIC CODE.

6 - PULL BOX DETAIL

NOT TO SCALE

ISSUED FOR BID

Freese and Nichols, Inc.
Texas Registered Engineering Firm F-2144

STATE OF TEXAS
REBECCA SANDOVAL
102369
LICENSED
PROFESSIONAL ENGINEER
01/26/2022

FREESE AND NICHOLS
10497 Town and Country Way,
Suite 600
Houston, Texas 77024
Phone - (713) 600-6800
Web - www.freese.com

CITY OF BEAUMONT
COLLIER'S FERRY PUMP STATION

ELECTRICAL

DETAILS I

F&N JOB NO.	BMT20326
DATE	01/07/2022
DESIGNED	DJD
DRAWN	JTR
REVISED	-
CHECKED	JNH
FILE NAME	EL-ALL-DT-MISC01.dwg

NO.	ISSUE	BY	DATE

VERIFY SCALE 0 1
Bar is one inch on original drawing. If not one inch on this sheet, adjust scale.

SHEET E-18

SEQ. 132

ACAD Rel: 24.0s (LMS Tech)
Filename: N:\ELEC\EL-ALL-DT-MISC01.dwg
Last Saved: 1/19/2022 2:02 PM Saved By: 03823
Plot Date: 1/26/2022 12:51 PM Plot By: 03644 Filename: N:\ELEC\EL-ALL-DT-MISC01.dwg

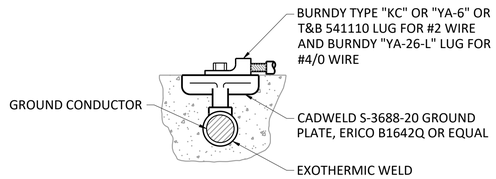

NO.1 GENERAL NOTE:

1. SET GROUND PAD IN CONCRETE PRIOR TO CONCRETE PLACEMENT. PROVIDE PROTECTION SHIELD DURING CONCRETE PLACEMENT. DO NOT PLACE CONCRETE OVER GROUND PAD.
2. CONNECT GROUND PAD TO REINFORCEMENT BAR. REINFORCEMENT BAR SHALL BE A MINIMUM OF 1/2"DIA AND 20'-0" IN LENGTH. CONNECTION TO SMALLER REINFORCEMENT BAR SHALL NOT BE ALLOWED.
3. CONNECT GROUND PAD TO GROUND SYSTEM. PROVIDE A #4/0 BARE TIN-PLATED COPPER CONDUCTOR.
4. PROVIDE EXOTHERMIC WELDS FOR ALL CONNECTIONS.

1 FLUSH MOUNTED GROUND PAD DETAIL

NOT TO SCALE

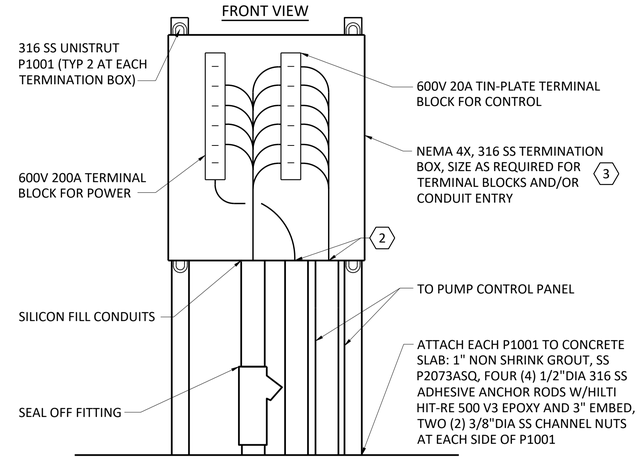

NO.2 NOTES BY SYMBOL "⬡"

1. ANCHORS SHALL BE 1/2"DIA ADHESIVE STAINLESS STEEL.
2. PROVIDE SILCONE IN CONDUITS TO WET WELL.
3. SUBMERSIBLE CABLE TERMINATION BOX. LOCATE OUTSIDE CLASS I, DIVISION 2 ENVELOPE.

2 SUBMERSIBLE CABLE TERMINATION BOX DETAIL

NOT TO SCALE

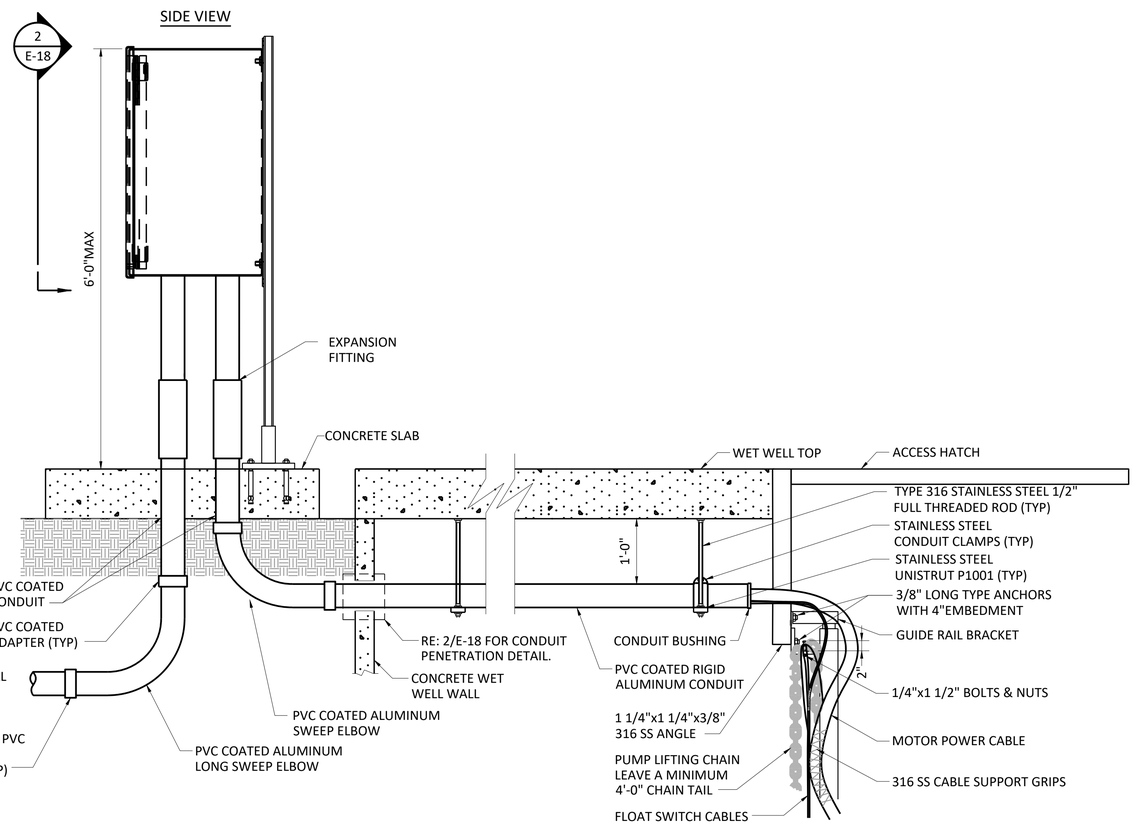

3 CONDUITS AT HATCH DETAILS

NOT TO SCALE

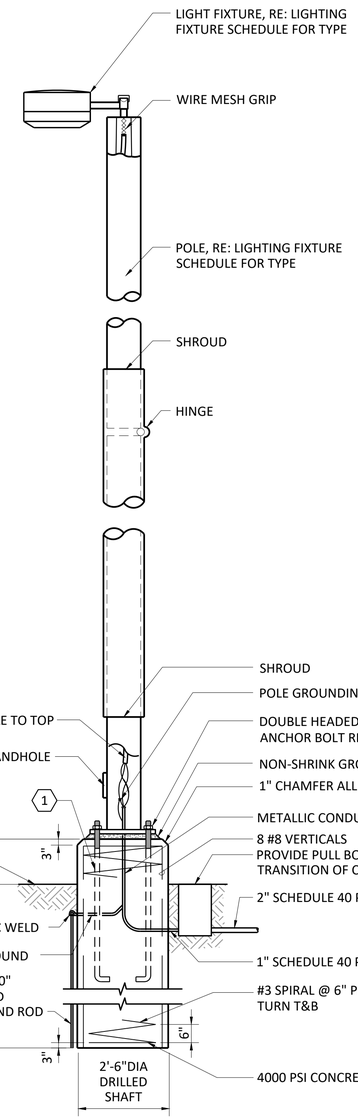

4 HINGED LIGHT POLE INSTALLATION

NOT TO SCALE

ISSUED FOR BID

Freese and Nichols, Inc.
Texas Registered Engineering Firm F-2144

STATE OF TEXAS
REBECCA SANDOVAL
102369
LICENSED
PROFESSIONAL ENGINEER
01/26/2022

FREESE AND NICHOLS
10497 Town and Country Way, Suite 600
Houston, Texas 77024
Phone - (713) 600-6800
Web - www.freese.com

CITY OF BEAUMONT
COLLIER'S FERRY PUMP STATION

ELECTRICAL

DETAILS II

NO.	ISSUE	BY	DATE

F&N JOB NO. BMT20326
DATE 01/07/2022
DESIGNED DJD
DRAWN JTR
REVISED -
CHECKED JNH
FILE NAME EL-ALL-DT-MISC02.dwg

VERIFY SCALE Bar is one inch on original drawing. If not one inch on this sheet, adjust scale. 0 1

SHEET E-19
SEQ. 133

ACAD Rel: 24.0s (LMS Tech)
Filename: N:\ELEC\EL-ALL-DT-MISC02.dwg
Last Saved: 1/19/2022 2:02 PM Saved By: 03823

Plot Date: 1/26/2022 12:51 PM Plot By: 03644 Filename: N:\ELEC\EL-ALL-DT-MISC02.dwg

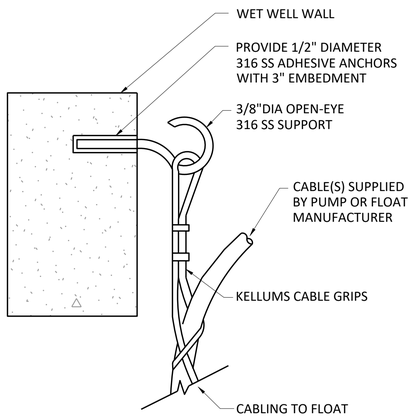

1 - FLOAT SWITCH CABLE SUPPORT

NOT TO SCALE

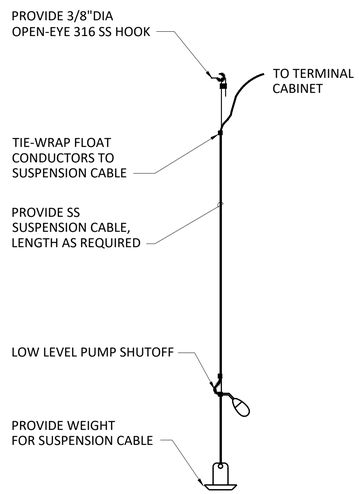

2 - FLOAT SWITCH CABLING DETAIL

NOT TO SCALE

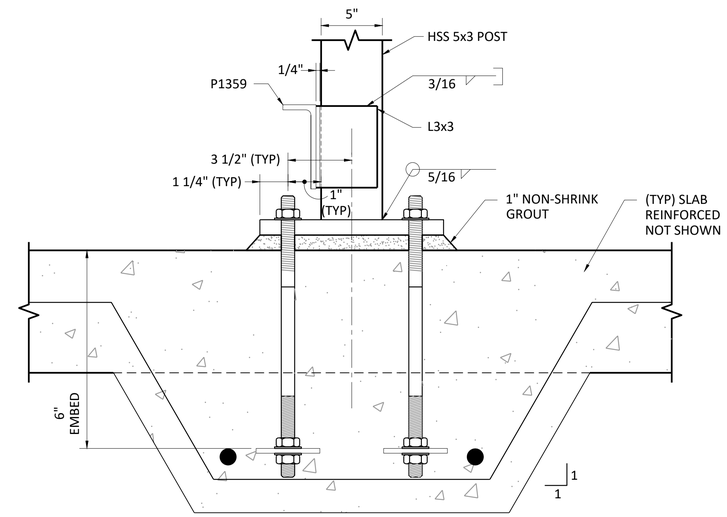

3 - DETAIL

NOT TO SCALE

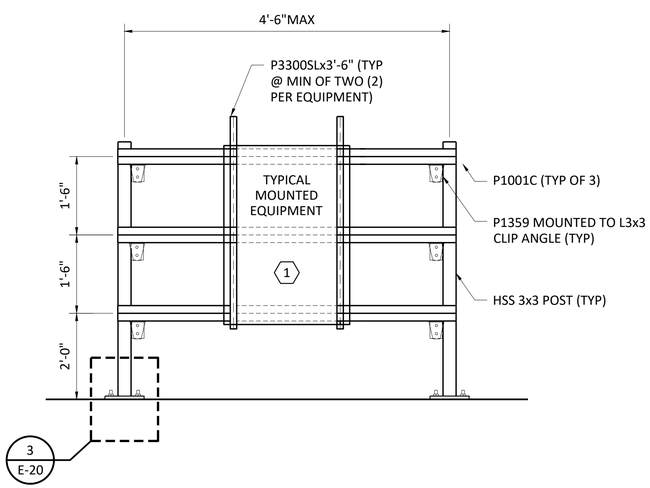

NO.4 GENERAL NOTES:

1. ALL MEMBERS SHOWN AND REQUIRED CONNECTING HARDWARE SHALL BE STAINLESS STEEL.
2. MEMBERS ARE INDICATED BY UNISTRUT PART NUMBERS. PROVIDE ALL MEMBERS AND CONNECTING HARDWARE BY UNISTRUT OR APPROVED EQUAL.
3. SLOPE SLAB-ON-GRADE TO DRAIN.
4. RACKS SHALL BE GROUNDED PER THE NATIONAL ELECTRICAL CODE. PROVIDE AS A MINIMUM ONE (1) 3/4"x10'-0" COPPER CLAD GROUND ROD ON EACH SIDE OF THE ELECTRICAL EQUIPMENT RACK.
5. ALL NUTS, BOLTS, WASHERS, OTHER FASTENERS AND HARDWARE ON ELECTRICAL EQUIPMENT RACK SHALL BE HOT DIPPED GALVANIZED STEEL.
6. ALL STEEL MEMBERS SHALL BE HOT-DIPPED GALVANIZED.
7. METAL DECK SHALL BE GALVANIZED AND SHOP PAINTED. G90 ZINC COATING; WITH UNPAINTED TOP AND BOTTOM SURFACES CLEANED, PRETREATED AND PRIMED WITH MANUFACTURER'S BAKED-ON, LEAD- AND CHROMATE-FREE RUST-INHIBITIVE PRIMER COMPLYING WITH PERFORMANCE REQUIREMENTS OF FS TT-P-664.
8. PROVIDE TWO (2) 9/16"DIA BOLT HOLES IN OUTSTANDING LEG OF L3x3 CLIP ANGLE FOR ATTACHMENT OF UNISTRUT P1359.
9. WELD CROSS BEAM TO POST WITH 3/16" FILLET AND PARTIAL PENETRATION GROVE WELDS, 4/32" EFFECTIVE THROAT.

NO.4 NOTES BY SYMBOL "⬡"

1. MOUNT EQUIPMENT AS REQUIRED.

4 - ELECTRICAL EQUIPMENT RACK DETAIL

NOT TO SCALE

ISSUED FOR BID

Freese and Nichols, Inc.
Texas Registered Engineering Firm F-2144

STATE OF TEXAS
REBECCA SANDOVAL
102369
LICENSED
PROFESSIONAL ENGINEER
01/26/2022

FREESE AND NICHOLS
10497 Town and Country Way,
Suite 600
Houston, Texas 77024
Phone - (713) 600-6800
Web - www.freese.com

CITY OF BEAUMONT
COLLIER'S FERRY PUMP STATION

ELECTRICAL

DETAILS III

NO.	ISSUE	BY	DATE

F&N JOB NO. BMT20326
DATE 01/07/2022
DESIGNED DJD
DRAWN JTR
REVISED -
CHECKED JNH
FILE NAME EL-ALL-DT-MISC03.dwg

VERIFY SCALE 0 1
Bar is one inch on original drawing. If not one inch on this sheet, adjust scale.

SHEET E-20

SEQ. 134

ACAD Rel: 24.0s (LMS Tech)
Filename: N:\ELEC\EL-ALL-DT-MISC03.dwg
Last Saved: 1/19/2022 2:02 PM Saved By: 03823

Plot Date: 1/26/2022 12:51 PM Plot By: 03644 Filename: N:\ELEC\EL-ALL-DT-MISC03.dwg